# CITY OF REDLANDS

## CITY COUNCIL
## FINANCING AUTHORITY
# A G E N D A S
### SEPTEMBER 16, 2025

**MARIO SAUCEDO**
Mayor

**MARC SHAW**
Mayor Pro Tempore

**PAUL BARICH**
Council Member

**EDDIE TEJEDA**
Council Member

**DENISE DAVIS**
Council Member
***
**JEANNE DONALDSON**
City Clerk

**PHILLIP DOOLITTLE**
City Treasurer

**CHARLES M. DUGGAN JR.**
City Manager

**YVETTE M. ABICH GARCIA**
City Attorney

5:00 p.m. Open Public Meeting, Public Comment (Closed Session)
6:00 p.m. Open Session (Public Meeting)
* * *
City Council Chambers
Civic Center, 35 Cajon Street, Redlands, California

# A G E N D A

The following information comprises the agenda for the regular meetings of the City Council of the City of Redlands and the Redlands Financing Authority of the City of Redlands at the times noted below in the City Council Chambers, Civic Center, 35 Cajon Street, Redlands, California, on:

## TUESDAY, SEPTEMBER 16, 2025

**To join via Zoom on a computer, laptop, or smart device**
Please visit www.zoom.us, click on Join a Meeting
Enter the **Meeting ID 896 2789 8341** then run the Zoom launcher
**To join via Zoom with audio only (cell phone or landline):**
Dial **1-877-853-5247**
Enter the Meeting ID **896 2789 8341**

Should the City lose connectivity on Zoom, we will halt the meeting until it can be restored. To check on the status of remote connectivity in the event of an outage, go to the City's website at www.cityofredlands.org or to the City's Facebook page at @CityofRedlands or the Instagram page at @CityofRedlands_CityHall.

In the event the City cannot reestablish Zoom connectivity in a reasonable amount of time, the mayor will adjourn the meeting to a future date.

***PLEASE NOTE**:* Anyone desiring to speak on an agendized item at this meeting may do so during the consideration of that item. Due to time constraints and the number of persons who may wish to give oral testimony, public comments will be limited to three (3) minutes.

- **To provide comment while participating from Council Chambers:**
  - Although it is not required, speakers are encouraged to submit a "Speaker Sign Up Sheet" before the meeting is convened. Forms are available in the Office of the City Clerk or in Council Chambers.
  - After the meeting has convened, you may place the speaker form in the basket at the table along the north wall of the Chambers. Please do not disturb the City Clerk while the meeting is in progress.

- **To provide comment through Zoom (on a computer, laptop, or smart device)**:
  - Click the "Raise Hand" button and the moderator will unmute you when it is your turn to speak

- **To provide comment via audio only (cell phone or landline)**:
  - Dial *9 to "Raise Hand". The moderator will identify you by your area code and last 3 numbers of your telephone number when it is your turn to speak.

**PLEASE SILENCE CELL PHONES, PAGERS AND OTHER ELECTRONIC COMMUNICATION DEVICES UPON ENTERING THE CHAMBERS**

5:00 P.M.

A. **Call City Council Meeting to Order**

B. **Public Comment**
*(Any person wishing to provide public comment on a closed session matter may do so at this time.)*

C. **Recess City Council Meeting to a Closed Session**

1. Conference with legal counsel: Existing Litigation - Government Code §54956.9(d)(1)
(City Attorney Garcia)
One Case.

   a. Holzer v. City of Redlands, et al., San Bernardino Superior Court, Case No. CIVSB2322787

2. Conference with real property negotiators - Government Code §54956.8
(Assistant City Manager Boatman)

| | |
|---|---|
| Property: | APN: 0292-166-08-0000 (Grove School) |
| Agency Negotiators: | Charles M. Duggan, City Manager; Christopher Boatman, Assistant City Manager |
| Negotiating Party: | Dr. Michelle Sweezey, Head of School, The Grove School |
| Under Negotiation: | Terms of possible property transfer to The Grove School |

3. Performance Evaluations of Public Employees – Government Code §54957(b)(1)
Position: City Manager

6:00 P.M.

D. **Reconvene City Council Meeting**

E. ***Invocation by Mayor Pro Tem Shaw***
***Pledge of Allegiance by Cram Elementary Student Council***
*(In keeping with long-standing traditions of legislative invocations, this City Council meeting may include a brief invocation. Such invocations are not intended to proselytize or advance any one, or to disparage any other, faith or belief. Neither the City nor the City Council endorses any particular religious belief or form of invocation.)*

F. **Closed Session Report**
*(No reportable action taken in closed session unless otherwise announced by the City Attorney at this time.)*

G. **Presentations**

1. Presentation of the Adult Literacy Proclamation to Don McCue, Director, A.K. Smiley Library, Diane Shimota, Adult Literacy Coordinator, and Katerina Biryukova, Adult Learner (Mayor Saucedo)

2. Presentation of a proclamation recognizing Eddie Chacon's 100th Birthday, presented to Karen Chacon (Mayor Saucedo)

3. Recognition of military service member whose banner has been retired from the Redlands Hometown Heroes Military Banner Program (Facilities and Community Services Director Crocker and Mayor Saucedo)

H. **Public Comment - City Council**
*(At this time, the City Council will provide an opportunity for the public to address them on any subject, within the jurisdiction of the City Council, which is not already scheduled on this agenda. However, any matter that requires action will be referred to staff for a report and possible action at a subsequent meeting. Comments will be limited to three {3} minutes.)*

I. **Consent Calendar**
*(The following routine items have been recommended for approval and will be acted upon simultaneously unless separate discussion and/or action is requested by a Councilmember or a member of the audience.)*

1. Approve minutes of the regular meeting of September 2, 2025 (City Clerk Donaldson)

2. Authorize issuance of a proclamation declaring September 28, 2025 as Adult Literacy Day in the City of Redlands (Mayor Saucedo)

3. Authorize issuance of a proclamation recognizing Eddie Chacon's 100th Birthday (Mayor Saucedo)

4. Disclosure of Settlement Agreement and General Release - Flynn Restaurant Group/Apple So Cal LLC v. City of Redlands; San Bernardino County Superior Court Case No. CIVSB 2412340 (City Attorney Garcia)

5. Approve Final Map for Tract No. 20528 submitted by Meritage Homes. The project site is located at 1160 W. Pioneer Avenue, on the north side of Pioneer Avenue and west side of Citrus Valley High School (Development Services Director Desatnik)

6. Adopt Resolution No. 8714 for Street Vacation No. 197, a request to vacate a small portion of Ramona Drive, consisting of approximately 77 linear feet (1,200 square-feet) of public right-of-way, located adjacent to the property at 1300 Prospect Drive. The subject portion of right-of-way is located at the southeast corner of 1300 Prospect Drive (APN: 0174-012-07-0000). This proposal qualifies for exemption from environmental review pursuant to Section 15061(b)(3) of the California Environmental Quality Act Guidelines (Development Services Director Desatnik)

7. Approve of the Local Cooperative Fire Protection Agreement between the City of Redlands and the U.S. Department of Agriculture, Forest Service, San Bernardino National Forest (Fire Chief Sessler)

8. Approve a Products Agreement with Nearmap US, Inc. to provide aerial imagery services for an amount not-to-exceed $72,213 for three years (Management Services/Finance Director Garcia)

9. Authorize the annual payment to San Bernardino County Sheriff's Department (Cal-ID/Identix) in the amount of $85,781.28 for Redlands Police Department's Fingerprint Identification Services (Management Services/Finance Director Garcia)

10. Approve a Second Amendment to the Agreement with Liftoff LLC for Microsoft Office 365 software licensing and consulting services (Management Services/Finance Director Garcia)

11. Approve an Intergovernmental Agreement with Burtronics Business Systems for managed print services for an initial term of three years for $175,000, with an option for a one-year extended term for a total amount not-to-exceed $235,000 for as-needed services (Management Services/Finance Director Garcia)

12. Receive and file the Pavement Accelerated Repair Implementation Strategy (PARIS) Program Annual Report (Municipal Utilities and Engineering Director Harris)

13. Approve a purchase order with Evantec Corporation for Joint Utilities Laboratory Consumables and Supplies for a total amount not-to-exceed $83,000, and determine that this action is exempt from environmental review pursuant to Section 15061(b)(3) of the State's guidelines implementing the California Environmental Quality Act (Municipal Utilities and Engineering Director Harris)

14. Approve the Redlands Police Department Tow Services Agreement with Rotational Tow Applicants: Broncs Towing Inc., Pepe’s Towing Service, Wilson’s Towing, and Armada Towing for the Term 2025-2028 (Police Chief Tolber)

15. Approve the agreement between the City and the Department of Alcoholic Beverage Control for the grant provided by the Alcohol Policing Partnership program; the additional appropriation of $42,648 in grant funds to the Police Department; and authorize the Chief of Police to sign and execute any necessary agreements related to the grant (Police Chief Tolber)

16. Accept the grant award from the Juvenile Justice Crime Prevention Act Program, and authorize an additional appropriation of $40,000 to the Police Department (Police Chief Tolber)

17. Approve the use of city resources and the request for in-kind support in the amount of $16,397.00 related to the Redlands Turkey Trot event hosted by Phoenix Hope International on November 27, 2025; approve temporary street closures related to the event; and determine that the event is categorically exempt from environmental review pursuant to Section 15311(c) of the State's guidelines implementing the California Environmental Quality Act (Facilities and Community Services Department Director Crocker)

J. **Communications**

1. Report and recommendation by the Ad Hoc Committee of the City Council regarding the selection of a Lead Labor Negotiator to represent the City during the upcoming contract negotiations with the City's bargaining units and possible direction to staff (Mayor Pro Tem Shaw and Council Member Davis)

2. Discussion and possible action relating to potential revenue ballot measures for the November 2026 Election (Council Member Tejeda)

K. **New Business**

1. Consideration of a Homeless Resource Services Agreement with Many Mansions for property management services for the Project Home Key located at 1675 Industrial Ave. Redlands, CA. 92373 for an amount not-to-exceed $300,000 for a period of one year with two additional one-year renewal options for a total compensation not-to-exceed $900,000 and determine that the services provided are exempt from environmental review pursuant to Section 15061 (b)(3) of the State’s guidelines implementing the California Environmental Quality Act (Assistant City Manager Boatman)

2. Consideration of the 2025-2026 Community Development Block Grant (CDBG) in the amount of $326,470 from the County of San Bernardino, approve an additional appropriation of the same, and adopt Resolution No. 8715 authorizing the City Manager, or designee, to execute the Grant Agreement and all other related documents (Development Services Director Desatnik)

3. Consideration of a Sole Source Procurement and Memorandum of Understanding (MOU) between the City of Redlands and the Apple Valley Fire Protection District for outfitting services of Fire Department light fleet emergency vehicles for a not-to-exceed amount of $500,000 over the initial and extended terms (Fire Chief Sessler)

4. Consideration of a Resolution of Intention to approve an amendment to the contract between the Board of Administration of the California Public Employees' Retirement System and the City Council of the City of Redlands (Human Resources/Risk Management Director Meteau)

5. Consideration of a Public Works Contract with All American Building Services for the 2025 Alley Paving Improvement Project for an amount not-to-exceed $465,000.15 and determination that the Project is categorically exempt from environmental review pursuant to Section 15301(c) of the State's Guidelines for Implementing the California Environmental Quality Act (Municipal Utilities and Engineering Director Harris)

L. **Individual Council Member Announcements and/or Reports on Activities**
*(No collective discussion or action.)*

M. **Adjournment**
The next regular meeting of the City Council will be held on October 7, 2025.

N. **Redlands Financing Authority**

1. Call regular meeting of the Board of Directors of the Redlands Financing Authority to order

2. **Public Comment - Redlands Financing Authority**
*(At this time, the Redlands Financing Authority will provide an opportunity for the public to address them on any subject, within its jurisdiction, which is not already scheduled on this agenda. However, any matter that requires action will be referred to staff for a report and possible action at a subsequent meeting. Comments will be limited to three {3} minutes.)*

3. Approve the minutes of the regular meeting of May 20, 2025 (Secretary Donaldson)

4. Adjourn Redlands Financing Authority meeting
The next Redlands Financing Authority meeting will be held on January 20, 2026.

*If you challenge any proposed development entitlement listed on this agenda in court, you may be limited to raising only those issues you or someone else raised at the public hearing described in this notice, or in written correspondence delivered to the City Council at or prior to this public hearing.*

*In compliance with the Americans with Disabilities Act, if you need special assistance to participate in this meeting, please contact Goutam Dobey, of the Municipal Utilities and Engineering Department at (909) 798-7584 ext 2. Notification 48 hours prior to the meeting will enable the City to make reasonable arrangements to ensure accessibility to this meeting.*

*(28 CFR 35.102-35.104 ADA Title II)*

*Any writings or documents distributed to a majority of the City Council regarding an open session agenda item less than 72 hours before this meeting are available for public inspection at the City Clerk's Office or at the dais of the City Clerk once the open session meeting begins.*

*Staff reports or other written documentation relating to items referred to on the agenda are available at the A. K. Smiley Public Library, 125 West Vine Street, Redlands, California, and on the City's website referenced below.*

*Regular meetings are televised live on Redlands TV Channel 3 (Spectrum) and Channel 35 (Frontier) and re-broadcast at 7:00 P.M. the following Wednesday, Friday and Sunday; and at 9:00 A.M. Thursday, Saturday and Monday. Meetings are also streamed live and archived for later viewing on demand on the City's website at www.cityofredlands.org. Agendas, staff reports and minutes of the City Council of the City of Redlands are available online at: www.cityofredlands.org.*

**City Council/Financing Authority Meeting** **G. 3.**

**DATE:** 09/16/2025

**TO:** Honorable Mayor and City Council Members

**SUBJECT:** Recognition of military service member whose banner has been retired from the Redlands Hometown Heroes Military Banner Program (Facilities and Community Services Director Crocker and Mayor Saucedo)

---

**DISCUSSION:**

The Redlands Hometown Heroes Military Banner Recognition Program (Military Banner Program) recognizes and honors Redlands residents and their immediate family members who are actively serving in, or have been honorably discharged from, the United States Armed Forces.

In accordance with Resolution No. 8146, City staff provide administrative support services to the Redlands Hometown Heroes Foundation related to the Military Banner Program. With appreciation for the sacrifice associated with military service to our country and in recognition of the embodiment of the pride we all have in our young men and women in uniform, the City Council of the City of Redlands does hereby officially commemorate the following military service member whose banner has been retired from the Military Banner Program:

Jeffrey D. Rendler, Sergeant First Class, Army - Banner flown over the streets of Redlands from July 2015 to July 2025.

**SUBMITTED BY:**
Facilities and Community Services Director Crocker

**PREPARED BY:**
Joe Bierma, Administrative Analyst

---

**Attachments**

Certificate of Recognition - Jeffrey Rendler

---

CITY OF REDLANDS, CALIFORNIA
**City Council**

# *Recognition and Appreciation*

is presented to

# *JEFFREY RENDLER*

In recognition of the sacrifice associated with having a family member in military service to our country and in appreciation for your sharing of the pride we all have in our young men and women in uniform. Witness all who read these words, the City Council of the City of Redlands does hereby officially thank you for your participation in the Redlands Hometown Heroes Program and present to you the banner recognizing your loved one's service.

Banner flown over the streets of Redlands from July 2015 to July 2025

*Attest:*

Mario Saucedo
Mayor

Jeanne Donaldson
City Clerk

**City Council/Financing Authority Meeting** **I. 1.**

**DATE:** 09/16/2025

**TO:** Honorable Mayor and City Council Members

**SUBJECT:** Approve minutes of the regular meeting of September 2, 2025 (City Clerk Donaldson)

---

**MOTION:**

I move to approve the regular meeting minutes of September 2, 2025.

---

**Attachments**

Regular Meeting Minutes of September 2, 2025

---

# MINUTES

Regular meeting of the City Council of the City of Redlands held in the Council Chambers, Civic Center, 35 Cajon Street, on September 2, 2025 at 5:00 P.M.

| | |
|---|---|
| Present: | Mario Saucedo, Mayor<br>Marc Shaw, Mayor Pro Tempore<br>Paul Barich, Council Member<br>Denise Davis, Council Member |
| Absent: | Eddie Tejeda, Council Member |
| Staff: | Charles M. Duggan, Jr., City Manager; Yvette M. Abich Garcia, City Attorney; Jeanne Donaldson, City Clerk; Phillip Doolittle, City Treasurer; Janice McConnell, Assistant City Manager; Chris Boatman, Assistant City Manager; Carl Baker, Public Information Officer; Danielle Garcia, Management Services/Finance Director; Brian Foote, City Planner; John Harris, Municipal Utilities and Engineering Director; Rich Sessler, Fire Chief; Rachel Tolber, Police Chief; Tabitha Crocker, Facilities and Community Services Director; Robert Meteau, HR/Risk Management Director |

Mayor Saucedo called the meeting to order and explained that comments could be presented in-person, via Zoom, via cell phone or landline. He offered the public an opportunity to provide comment on any item on the agenda for the closed session.

PUBLIC COMMENT

None forthcoming

CLOSED SESSION

Conference with legal counsel: Existing Litigation - Government Code §54956.9(d)(1)
(City Attorney Garcia)
Two Cases.

a. Rogers, et al. v. City of Redlands, San Bernardino Superior Court, Case No. CIVSB2126031
b. Miller & Associates, Inc. v. City of Redlands, San Bernardino Superior Court, Case No. CIVSB2203755

Performance Evaluations of Public Employees – Government Code §54957(b)(1)
Position: City Manager

RECONVENE CITY COUNCIL MEETING

The meeting reconvened at 6:00 P.M. with an invocation by Council Member Barich. The Pledge of Allegiance to the American flag was conducted by Boy Scout Troop 44.

## CLOSED SESSION REPORT

City Attorney Garcia announced that no reportable action was taken during the closed session.

## PRESENTATIONS

### Redlands Pet Adoption

Facilities and Community Services Senior Manager Don Craw introduced Joe Alcarez, the City's new Animal Services Supervisor. He and Kennel Attendant Hailey Stuck showed off "Rambo", a four-year-old male Pit Bull mix, who is available for adoption, along with twenty-eight other dogs and three cats at the Redlands Animal Shelter. Mr. Craw provided the Shelter statistics for March through August 2025, which included: 160 adopted dogs and 81 adopted cats.

### Childhood Cancer Awareness Month Proclamation

Mayor Saucedo presented the Childhood Cancer Awareness Month Proclamation to Stephanie Avila, Executive Director, Childhood Cancer Foundation of So Cal.

### California Native American Day Proclamation

Mayor Saucedo presented the California Native American Day Proclamation to Vanessa Brierty, District Director, Office of Assemblymember James C. Ramos.

### National Preparedness Month Proclamation

Mayor Saucedo and Chief Rich Sessler presented the National Preparedness Month Proclamation to Esther Martinez, Emergency Operations Specialist, of the Redlands Fire Department.

### Redlands Football Club Proclamation

Mayor Saucedo presented the Redlands Football Club Proclamation to Jake Dawes, for their contributions to the community.

### Hispanic Heritage Month Proclamation

Mayor Saucedo presented the Hispanic Heritage Month Proclamation to Sarai Olivares, Advisor for the MEChA Club at Redlands High School, RUSD Superintendent Juan Cabral, and several MEChA Club students who highlighted the Club's work.

### Peace Officer Standards & Training Executive Certificate

City Manager Duggan introduced San Bernardino County POST Regional Training Consultant Dr. Matthew O’Deane, who presented the Peace Officer Standards and Training (POST) Executive Certificate to Police Chief Rachel Tolber, honoring her accomplishments.

## PUBLIC COMMENT

Open Government — Stephen Rogers raised questions about his lawsuit against the City, was hopeful the matter would not be delayed any further, and he wondered when the PARIS fees would be removed from residents' utility bills. He was curious why the Closed Session did not include a performance evaluation related to the City Attorney, and he again recommended the Council establish measurable goals and objectives for the City Manager position.

Mass Shooting in Minnesota — Joshua Hall said the shooter in Minnesota was identified as transgender, and he thought that the government was wrongly celebrating the transgender lifestyle. He urged for more pharmaceutical regulations to limit the use of Selective Serotonin Reuptake Inhibitors (SSRI) and antidepressants.

Citrus Avenue Widening — J.J. Orf and Daniel Espinoza voiced concerns regarding the planned widening of Citrus Avenue, between Dearborn and Wabash, as they weren't convinced the street needed widening. They thought the focus should be more about how fast drivers are going on this stretch, and they requested to see any new engineering designs for the street.

## CONSENT CALENDAR

### Minutes

On motion of Mayor Pro Tempore Marc Shaw, seconded by Council Member Denise Davis, the City Council unanimously approved, by roll call vote, the regular meeting minutes of July 15, 2025 and the special meeting minutes of August 11, 2025.

**Vote:** 4 - 0 Passed

### Proclamation Childhood Cancer Awareness

On motion of Mayor Pro Tempore Marc Shaw, seconded by Council Member Denise Davis, the City Council unanimously authorized, by roll call vote, the issuance of a proclamation recognizing Childhood Cancer Awareness Month.

**Vote:** 4 - 0 Passed

### Proclamation Hispanic Heritage Month

On motion of Mayor Pro Tempore Marc Shaw, seconded by Council Member Denise Davis, the City Council unanimously authorized, by roll call vote, the issuance of a proclamation recognizing September 2025 as Hispanic Heritage Month.

**Vote:** 4 - 0 Passed

### Proclamation National Preparedness Month

On motion of Mayor Pro Tempore Marc Shaw, seconded by Council Member Denise Davis, the City Council unanimously authorized, by roll call vote, the issuance of a proclamation recognizing National Preparedness Month.

**Vote:** 4 - 0 Passed

Proclamation Redlands Football Club

On motion of Mayor Pro Tempore Marc Shaw, seconded by Council Member Denise Davis, the City Council unanimously authorized, by roll call vote, the issuance of a proclamation recognizing the Redlands Football Club for their contributions to the community and athleticism.

**Vote:** 4 - 0 Passed

Proclamation September 26, 2025 California Native American Day

On motion of Mayor Pro Tempore Marc Shaw, seconded by Council Member Denise Davis, the City Council unanimously authorized, by roll call vote, the issuance of a proclamation declaring September 26, 2025 as California Native American Day in the City of Redlands.

**Vote:** 4 - 0 Passed

Proclamation Celebrating California's 175th Anniversary of Statehood

On motion of Mayor Pro Tempore Marc Shaw, seconded by Council Member Denise Davis, the City Council unanimously authorized, by roll call vote, the issuance of a proclamation celebrating California's 175th Anniversary of Statehood.

**Vote:** 4 - 0 Passed

Settlement Agreement Disclosure

City Attorney Garcia explained the settlement agreement in connection with Julie C. Alvarado-Salcido v. City of Redlands; San Bernardino County Superior Court Case No. CIVSB 2218452, reflected the terms and conditions for settlement as approved by the City Council and City Attorney at a special meeting held on June 24, 2025. In accordance with the City's Municipal Code, and following the spirit of the Brown Act, this matter is to notify the public of the settlement negotiated by the City. Furthermore, Ms. Garcia clarified that during the public portion of the meeting on 6/24/25, she provided the Closed Session Report, announcing the terms of the Settlement Agreement. As public comment, Stephen Rogers said there appeared to be no accountability for bad behavior because the City has not incorporated a code of conduct for all employees to follow. He added that the item should not be on the Consent Calendar, and he thought this lacked transparency.

On motion of Council Member Paul Barich, seconded by Council Member Denise Davis, the City Council unanimously approved, by roll call vote, the disclosure and agreed to receive and file the Settlement Agreement and General Release between the City of Redlands, Michael Reiss, and Julie C. Alvarado-Salcido. Under the terms and conditions of the Settlement Agreement, the City agrees to pay Ms. Alvarado-Salcido $1,200,000 to settle and dispose of all disputes related to the San Bernardino County Superior Court Case No. CIVSB 2218452.

**Vote:** 4 - 0 Passed

SB County Registrar of Voters Secure Ballot Boxes Agreement

On motion of Mayor Pro Tempore Marc Shaw, seconded by Council Member Denise Davis, the City Council unanimously determined, by roll call vote, that approval of an Installation and Maintenance Agreement with the County of San Bernardino Registrar of Voters for three Secure Ballot Boxes on City property is not subject to environmental review pursuant to Section 15061(b)(3) of the State's Guidelines implementing the California Environmental Quality Act; and approved the Agreement with the County of San Bernardino Registrar of Voters for the three Secure Ballot Boxes on City property for all elections in San Bernardino County, with an expiration date of June 17, 2035.

**Vote:** 4 - 0 Passed

Resolution No. 8711 Commission Determination No. 66 Veterinary Clinics

On motion of Mayor Pro Tempore Marc Shaw, seconded by Council Member Denise Davis, the City Council unanimously determined, by roll call vote, that the proposed action is categorically exempt from the California Environmental Quality Act pursuant to Section 15301 (Existing Facilities) of the CEQA; and adopted Resolution No. 8711 approving Commission Determination No. 66, and a request to establish a veterinary clinic within an existing 3,160 square-foot tenant space, located within an existing multi-tenant shopping center, Plaza Las Palmas, at 1150 Brookside Avenue, Unit U; and classifying veterinary clinics with no overnight boarding as a conditionally permitted use within the Neighborhood Convenience Center (C-2) District.

**Vote:** 4 - 0 Passed

Resolution No. 8712 Annex No. 28 Intent to Annex Territory CFD 2004-1

On motion of Mayor Pro Tempore Marc Shaw, seconded by Council Member Denise Davis, the City Council unanimously determined, by roll call vote, that the proposed project is exempt from environmental review pursuant to Section 15061(b)(3) of the State's guidelines implementing the California Environmental Quality Act; and adopted Resolution No. 8712, Annexation No. 28, declaring intent to annex territory into Community Facilities District 2004-1, and setting the public hearing for October 7, 2025.

**Vote:** 4 - 0 Passed

Resolution No. 8713 Annex No. 30 Intent to Annex Territory CFD 2004-1

On motion of Mayor Pro Tempore Marc Shaw, seconded by Council Member Denise Davis, the City Council unanimously determined, by roll call vote, that the proposed project is exempt from environmental review pursuant to Section 15061(b)(3) of the State's guidelines implementing the California Environmental Quality Act; and adopted Resolution No. 8713 Annexation No. 30, declaring intent to annex territory into Community Facilities District 2004-1 and setting the public hearing for October 7, 2025.

**Vote:** 4 - 0 Passed

In-Kind Support Oktoberfest Event

On motion of Mayor Pro Tempore Marc Shaw, seconded by Council Member Denise Davis, the City Council unanimously determined, by roll call vote, that the approval of the Oktoberfest event hosted by the Redlands Optimist Club on October 4 and October 5, 2025, is exempt from environmental review pursuant to Section 15311(c) of the State's guidelines implementing the California Environmental Quality Act; authorized the use of city resources and in-kind support in the amount of $16,505.63; and authorized the request for the sale and consumption of alcoholic beverages at the event to be held on October 4 and October 5, 2025.

**Vote:** 4 - 0 Passed

In-Kind Support Believe Walk Event

Facilities and Community Services Department Director Crocker introduced the request for in-kind support in the amount of $45,271.82 related to the Believe Walk event hosted by the Stater Bros. Charities on October 4 and 5, 2025. As public comment, Dennis Bell said the amount requested was excessive, and he thought Stater Bros could easily afford to pay for the event. He urged the Council to stop giving away taxpayer dollars and questioned the appearance of a quid pro quo between Stater Bros and the Redlands Bicycle Classic event organizers.

On motion of Council Member Paul Barich, seconded by Council Member Denise Davis, the City Council unanimously determined, by roll call vote, that the approval of the event is exempt from environmental review pursuant to Section 15311(c) of the State's guidelines implementing the California Environmental Quality Act; authorized the expenditure of city resources and in-kind support in the amount of $45,271.82 related to this event; and authorized the temporary closure of streets during the Believe Walk event to be held on October 4 and 5, 2025.

**Vote:** 4 - 0 Passed

In-Kind Support Resident Expo

This item was removed from the agenda to allow staff to make modifications requested by the event organizer. The item will be scheduled for a future meeting.

In-Kind Support Downtown Redlands Artwalk Event

On motion of Mayor Pro Tempore Marc Shaw, seconded by Council Member Denise Davis, the City Council unanimously determined, by roll call vote, that the approval of the Downtown Redlands Artwalk event hosted by the Kid's Cure Foundation on October 19, 2025, is exempt from environmental review pursuant to Section 15311(c) of the State's guidelines implementing the California Environmental Quality Act; and authorized the use of city resources and in-kind support in the amount of $7,234.00 and the temporary street closures associated with the Downtown Redlands Artwalk event to be held on October 19, 2025.

**Vote:** 4 - 0 Passed

In-Kind Support Dog Jog Event

Facilities and Community Services Department Director Crocker introduced the request for in-kind support in the amount of $14,648.00 related to the Dog Jog event hosted by the Redlands Chamber of Commerce on October 26, 2025. As public comment, Chamber of Commerce Executive Director Evan Sanford, highlighted many of the activities available during the event, including the new addition to allow volunteers to walk adoptable shelter dogs. The event attracts many people to the downtown area, and he pointed out this has fast become a popular activity for pet owners. Mayor Pro Tem Shaw and Council Member Barich announced they would be participating in the Dog Jog.

On motion of Mayor Pro Tempore Marc Shaw, seconded by Council Member Paul Barich, the City Council unanimously determined, by roll call vote, that the approval of the event is exempt from environmental review pursuant to Section 15311(c) of the State's guidelines implementing the California Environmental Quality Act; and approved the expenditure of city resources, in-kind support in the amount of $14,648.00 related to the Dog Jog event hosted by the Redlands Chamber of Commerce; and approved the temporary street closures for the event to be held on October 26, 2025.

**Vote:** 4 - 0 Passed

Limited-Term Building Maintenance Worker Positions

Facilities and Community Services Director Crocker described the needs of the Building Maintenance Division. The aging infrastructure of the City's buildings requires significant resources and time to ensure the proper function and safety of these spaces. Currently, there are a number of deferred painting projects that need to be completed to prevent potential damage or deterioration and maintain the visual appeal of the City's properties. The addition of two limited-term Building Maintenance Painter positions through the end of the 2025/26 fiscal year will allow the Building Maintenance Division to address different painting projects throughout the City and ensure the longevity of the properties while also enhancing the visual appeal to the community.

As public comment, Stephen Rogers was confused that this item was presented by Director Crocker and not Human Resources Director Meteau. He suggested the City was not in compliance with fair employment practices and these positions should be posted online and made available to anyone interested in applying. Director Crocker and Assistant City Manager Boatman clarified that these positions will be recruited and will not be under contract. The two limited-term Building Maintenance Worker (Painter) positions will go away at the end of the term, not-to-exceed 15 months.

On motion of Council Member Paul Barich, seconded by Mayor Pro Tempore Marc Shaw, the City Council unanimously approved, by roll call vote, two limited-term Building Maintenance Worker (Painter) positions within the Building Maintenance Division for a term not-to-exceed 15 months.

**Vote:** 4 - 0 Passed

2024 Federal Emergency Management Performance Grant Award

Fire Chief Sessler described the Department of Homeland Security, Federal Emergency Management Agency 2024 Emergency Management Performance Grant award in the amount of $16,460. The purpose of the Emergency Management Performance Grant (EMPG) is to sustain and improve comprehensive emergency management programs at the state, tribal, and local levels for all man-made and natural disasters through the prevention, mitigation, response, and recovery of all hazardous events. The grant award acceptance will assist with the partial salary of the Emergency Operations Specialist position in the Fire Department's Emergency Operations Division. As public comment, Stephen Rogers expressed doubts regarding the city's compliance with federal funding regulations, including the provision of prevailing wage requirements and fair employment opportunities.

On motion of Mayor Pro Tempore Marc Shaw, seconded by Council Member Denise Davis, the City Council unanimously accepted, by roll call vote, the Department of Homeland Security, Federal Emergency Management Agency 2024 Emergency Management Performance Grant award in the amount of $16,460; and authorized an additional appropriation for the same.

**Vote:** 4 - 0 Passed

Intergovernmental Purchase of Dell Servers

On motion of Mayor Pro Tempore Marc Shaw, seconded by Council Member Denise Davis, the City Council unanimously approved, by roll call vote, the Intergovernmental Purchase of Dell Servers from Sidepath for the amount of $81,562.

**Vote:** 4 - 0 Passed

SCE Utility Easement

On motion of Mayor Pro Tempore Marc Shaw, seconded by Council Member Denise Davis, the City Council unanimously determined, by roll call vote, that granting an electric utility easement to Southern California Edison is exempt from environmental review pursuant to Section 15061(b)(3) of the State's guidelines implementing the California Environmental Quality Act; and granted an electric utility easement to Southern California Edison on a portion of Lot 15 of the Chicago Colony Reservation.

**Vote:** 4 - 0 Passed

WWTP Mobile Office

On motion of Mayor Pro Tempore Marc Shaw, seconded by Council Member Denise Davis, the City Council unanimously approved, by roll call vote, a Sourcewell purchase from Mobile Modular for a mobile office for use at the Wastewater Treatment Plant for an amount not-to-exceed $123,402.75.

**Vote:** 4 - 0 Passed

Third Amendment Carollo Engineers, Inc. Agreement

On motion of Mayor Pro Tempore Marc Shaw, seconded by Council Member Denise Davis, the City Council unanimously approved, by roll call vote, the Third Amendment to the Professional Services Agreement with Carollo Engineers, Inc. for the Tate Water Treatment Plant Raw Water Influent Pipeline Replacement Project, extending the completion time by twelve (12) months to October 18, 2026.

**Vote:** 4 - 0 Passed

COMMUNICATIONS

League of California Cities Annual Conference Voting Delegate

Mayor Saucedo opened the discussion relating to the designation of a voting delegate and alternates to the 2025 League of California Cities Annual Conference scheduled to occur October 8-10, 2025 in Long Beach. City Attorney Garcia said that the Brown Act allows all the Council Members to attend the conference, provided they do not discuss specific city business with each other, outside the official conference program.

On motion of Mayor Mario Saucedo, seconded by Council Member Paul Barich, the City Council unanimously designated, by roll call vote, Council Member Davis to serve as the voting delegate for the League of California Cities 2025 Annual Conference; and designated Mayor Saucedo to serve as alternate voting delegate for the League of California Cities 2025 Annual Conference, scheduled to occur October 8-10, 2025 in Long Beach.

**Vote:** 4 - 0 Passed

Bench Installation with Memorial Plaque

Council Member Davis provided background on the request to install a bench with a memorial plaque in front of Caprice Café, in memory of Christopher "Chris" Pepino. She highlighted his many accomplishments and listed the lasting impact he has made on this community. As public comment, Hanna Van Gelder expressed her appreciation of the City's willingness to establish a special space in honor of Chris and the bench and memorial plaque are a way to recognize the great loss of her dear friend. The space will be a place to remember and reflect upon the wonderful memories of his life.

On motion of Council Member Paul Barich, seconded by Council Member Denise Davis, the City Council unanimously directed staff, by roll call vote, to install a bench at the southeast corner of State Street and 5th Street, on the sidewalk in front of Caprice Café, with a plaque dedicating the bench in memory of Chris Pepino, founder of Caprice Café.

**Vote:** 4 - 0 Passed

City of Redlands Core Values - Video Series

Public Information Officer Baker presented the first in a new series of videos depicting City of Redlands Core Values. The video featured Arthur Amaral of the Building Maintenance Division. The Mayor thanked Multimedia Production Coordinator, Kam Kalanui, for his outstanding production work.

NEW BUSINESS

Contract Award 2025 CIP Sewer Pipeline Replacement Project

Municipal Utilities and Engineering Director Harris provided details on a Public Works Construction Contract with Tryco General Engineering for the 2025 CIP Sewer Pipeline Replacement Project for an amount not-to-exceed $1,494,516.

On motion of Mayor Pro Tempore Marc Shaw, seconded by Council Member Paul Barich, the City Council unanimously determined, by roll call vote, that approval of the contract and construction of the 2025 CIP Sewer Pipeline Replacement Project is exempt from environmental review in accordance with Section 15302 of the State's Guidelines implementing the California Environmental Quality Act; approved the 2025 CIP Sewer Pipeline Replacement Project plans and specifications; and awarded a Public Works Construction Contract to Tryco General Engineering for an amount non-to-exceed $1,494,516.

**Vote:** 4 - 0 Passed

Contract Award 2025 Citywide Sidewalk and ADA Ramp Replacement Project

Municipal Utilities and Engineering Director Harris reviewed the Public Works Construction Contract with Garcon Construction, Inc. for the 2025 Citywide Sidewalk and ADA Ramp Replacement Project for an amount not to exceed $529,406.26. This is an annual contract to replace fourteen ADA ramps. It is anticipated that the Project will be completed within forty-five working days. Mayor Saucedo was pleased with the contract as it demonstrates the City's responsive efforts to serve the needs of the residents.

On motion of Mayor Pro Tempore Marc Shaw, seconded by Council Member Denise Davis, the City Council unanimously determined, by roll call vote, that approval of the 2025 Citywide Sidewalk and ADA Ramp Replacement Project is exempt from environmental review in accordance with Section 15301(c) of the State's Guidelines implementing the California Environmental Quality Act; approved the 2025 Citywide Sidewalk and ADA Ramp Replacement project plans and specifications; awarded the Public Works Construction Contract to Garcon Construction, Inc. for an amount not to exceed $529,406.26; and approved a $29,406.26 additional appropriation from the Sidewalk Improvement Reserve Fund.

**Vote:** 4 - 0 Passed

WWTP Landfill Leachate Environmental Site Assessment

Municipal Utilities and Engineering Director Harris explained the need for a Sole Source Professional Services Agreement with Rincon Consultants, Inc., for a landfill leachate environmental site assessment at the Wastewater Treatment Plant for an amount not-to-exceed $369,750. In 2020, MUED staff discovered that leachate from the City's landfill had been intermittently disposed of in an unlined sludge drying bed at the City's Wastewater Treatment Plant (WWTP) for approximately six years. Staff immediately discontinued the practice and notified the Santa Ana Regional Water Quality Control Board (Board). The Board requested that the City prepare a Work Plan to investigate potential impacts to soil and groundwater.

Rincon Consultants, Inc. was hired to develop and submit the required Work Plan, titled "Redlands Wastewater Treatment Facility Landfill Leachate Investigation," due to their recent experience with installing ground monitoring wells for site assessment at another location within the City. The Board provided comments in 2022 and issued additional guidance via email in 2023. After incorporating all required revisions, the Work Plan was formally approved by the Board on March 25, 2025. The proposed Scope of Work presented tonight is based on the Board's comments and outlines the necessary level of effort to revise and finalize the Work Plan, implement a subsurface investigation, and prepare a report documenting findings and recommendations.

On motion of Mayor Pro Tempore Marc Shaw, seconded by Council Member Denise Davis, the City Council unanimously determined, by roll call vote, that approval of a Professional Services Agreement with Rincon Consultants, Inc. is exempt from environmental review pursuant to Section 15061(b)(3) of the State's guidelines implementing the California Environmental Quality Act; and approved the Sole Source Professional Services Agreement with Rincon Consultants, Inc. for a landfill leachate environmental site assessment at the Wastewater Treatment Plant for an amount not-to-exceed $369,750.

**Vote:** 4 - 0 Passed

Wastewater Biosolids Hauling and Disposal Services

Municipal Utilities and Engineering Director Harris highlighted a Non-Professional Services Agreement with Synagro-WWT, Inc. for wastewater biosolids hauling and disposal services with an initial one-year term not to exceed $500,000 and options to extend for two additional years for a total potential amount not-to-exceed $1,500,000. The scope of services requires the contractor to provide daily biosolids hauling and comply with all applicable federal, state, and local regulations governing the transport and beneficial reuse of biosolids. The WWTP Biosolids Management Program produces Class B biosolids that meet U.S. EPA guidelines for land application as fertilizer.

On motion of Mayor Pro Tempore Marc Shaw, seconded by Council Member Paul Barich, the City Council unanimously determined, by roll call vote, that approval of the Non-Professional Services Agreement with Synagro-WWT, Inc. is exempt from environmental review pursuant to Section 15061(b)(3) of the State's guidelines implementing the California Environmental Quality Act; and approved the Non-Professional Services Agreement with Synagro-WWT, Inc. for wastewater biosolids hauling and disposal services,

with an initial one-year term value not to exceed $500,000 and options to extend for two additional years.

**Vote:** 4 - 0 Passed

PO Modification City's LNG/CNG Fuel Island

This item was removed from the agenda to allow staff time to revise the scope of work. The item will be scheduled for a future meeting.

COUNCIL MEMBER ANNOUNCEMENTS AND ACTIVITIES

Mayor Saucedo reminded everyone to drive carefully now that school is back in session, and to stay safe and be respectful of the laws and the environment. He was grateful to all the city employees and their dedication to serving the public.

Mayor Pro Tem Shaw thanked the residents of his district for their patience and understanding regarding two recent water main breaks, which triggered a "Boil Water" notice. He appreciated all the city staff's efforts to resolve the issues. He submitted his report of activities for the months of July and August 2025, as available online and attached to the staff report.

Council Member Barich enjoyed a vacation in Italy.

Council Member Davis attended the grand opening of Viva La Boba, participated in another Blue Zone walk, attended the Cultural Arts Commission meeting, enjoyed Coffee with a Council Member, spoke at the Sunrise Rotary Club and was excited to announce that applications are now being accepted for the 5th season of Youth Council.

ADJOURNMENT

There being no further action required the meeting was adjourned at 7:46 P.M. The next regular meeting of the City of Redlands City Council will be held on September 16, 2025.

**City Council/Financing Authority Meeting** **I. 2.**

**DATE:** 09/16/2025

**TO:** Honorable Mayor and City Council Members

**SUBJECT:** Authorize issuance of a proclamation declaring September 28, 2025 as Adult Literacy Day in the City of Redlands (Mayor Saucedo)

---

**MOTION:**

I move to authorize the issuance of a Proclamation declaring September 28, 2025, as Adult Literacy Day in the City of Redlands.

---

**Attachments**

Adult Literacy Day 2025

---

# PROCLAMATION

## *Adult Literacy Day*

**WHEREAS,** California Library Literacy Services (CLLS) has been providing literacy services to adults in California for over 40 years; and

**WHEREAS,** the most recent studies available indicate that nearly 23 percent of California's adults lack basic literacy skills; and

**WHEREAS,** the California State Legislature has declared in State Education Code Sec. 18010 that the public library is "a resource for continuing education and re-education beyond the years of formal education."; and

**WHEREAS,** adults in Redlands seek to improve their literacy skills through the Redlands Adult Literacy Program so that they may get a job or advance in their employment, build or improve a small business, help their children in school, or work towards their own higher education; and

**WHEREAS,** the Redlands Adult Literacy Program provides vital literacy assistance through one-on-one tutoring, computer classes, and a family literacy program; and

**WHEREAS,** the Redlands Adult Literacy Program works collaboratively with community partners including the Redlands Unified School District, First Baptist Church of Redlands, and YMCA of the East Valley, to advance adult literacy in Redland; and

**WHEREAS,** the Redlands Adult Literacy Program provides important outreach and concrete benefits to underserved populations in the Redlands community; and

**WHEREAS,** we commend the efforts of the Redlands Adult Literacy Program and all its volunteers· and community partners for assisting adult learners who work to improve their reading and writing so that they can provide a better future for themselves, their families, and their community;

**NOW, THEREFORE, BE IT RESOLVED** that the City Council of the City of Redlands does hereby proclaim September 28, 2025, as Adult Literacy Day in the City of Redlands and calls upon our residents to promote literacy efforts and education programs throughout our community.

**IN WITNESS WHEREOF,** we hereunto affix our signatures and Official Seal of the City of Redlands on this 16th day of September, 2025.

_____

Mario Saucedo, Mayor

*Attest:*

_____

Jeanne Donaldson, City Clerk

**City Council/Financing Authority Meeting** **I. 3.**

**DATE:** 09/16/2025

**TO:** Honorable Mayor and City Council Members

**SUBJECT:** Authorize issuance of a proclamation recognizing Eddie Chacon's 100th Birthday (Mayor Saucedo)

---

**MOTION:**

I move to authorize issuance of proclamation recognizing Eddie Chacon's 100th Birthday.

---

**Attachments**

Eddie Chacon’s 100th Birthday

---

# PROCLAMATION

## *Eddie Chacon's 100th Birthday*

**WHEREAS,** Pablo Edward Chacon, aka "Eddie," was born in San Bernardino, CA on September 24th, 1925, and will soon turn **100 years old**; and

**WHEREAS,** as children, Eddie and his sisters enjoyed taking trips to the City of Redlands, always admiring its beauty and charm. They often talked about one day living there — a dream Eddie ultimately fulfilled for himself and his family in 1956; and

**WHEREAS,** Eddie enlisted in the United States Navy at the age of 17 in 1942 and worked as a machinist mate operating and fixing systems crucial to the ship's operation. His services included the Pacific Theater, European Theater, and American Theater: and

**WHEREAS,** early on in his military service Eddie met Caroline Nancy Lanzio in (Pittsburgh PA), and a lasting relationship was formed which distance couldn't break. When he was deployed, she wrote to him daily and, when honorably discharged from the United States Navy on December 30th, 1945, he was discharged to Pennsylvania to start their family; and

**WHEREAS,** Eddie and Caroline were married for 56 years and had three children, Eddie, Doreen & Karen. Eddie eventually followed his dream and moved his family to Redlands in 1956. He opened Eddie's Barber shop on Orange Street, where the first haircuts became a memory for many residents. Eventually, he opened two other businesses also on Orange Street: Stanton's Liquor and the Old Pool Hall; and

**WHEREAS,** Eddie has also been an active member of the American Legion for 70 years and a proud member of Post 650. Being part of a diverse community with common goals and hardships, the American Legion Post 650 became a second home for him and his family. Through his volunteering with the Legion, he also fostered a stronger sense of inclusion and connection to the Community of Redlands; and

**WHEREAS,** Eddie Chacon's 100th birthday marks not only a personal milestone, but a celebration for the entire Redlands community. His life reflects the values that make our city strong — dedication, kindness, and a deep commitment to family, neighbors and veterans;

**NOW, THEREFORE, BE IT RESOLVED** that the City Council of the City of Redlands does hereby recognize Eddie Chacon's 100th birthday on September 24, 2025, and honor his service to our Country and to our community. Happy Birthday Eddie!

**IN WITNESS WHEREOF,** we hereunto affix our signatures and Official Seal of the City of Redlands on this 16th day of September, 2025.

Mario Saucedo, Mayor

*Attest:*

Jeanne Donaldson, City Clerk

**City Council/Financing Authority Meeting** **I. 4.**

**DATE:** 09/16/2025

**TO:** Honorable Mayor and City Council Members

**SUBJECT:** Disclosure of Settlement Agreement and General Release - Flynn Restaurant Group/Apple So Cal LLC v. City of Redlands; San Bernardino County Superior Court Case No. CIVSB 2412340 (City Attorney Garcia)

---

**DISCUSSION:**

Attached is a copy of the "Settlement Agreement and General Release," which reflects the terms and conditions for settlement of the above-mentioned litigation as approved by the City Council and City Attorney. In accordance with the City's Municipal Code, and following the spirit of the Brown Act, this matter is on your agenda to notify the public of the settlement negotiated by the City.

**SUBMITTED BY:**
Yvette M. Abich Garcia, City Attorney

**PREPARED BY:**
Mayra Shushereba, Administrative Analyst

**REVIEWED BY:**
Charles M. Duggan, Jr., City Manager
Janice McConnell, Assistant City Manager
Danielle Garcia, Management Services/Finance Director

---

**Attachments**

Settlement Agreement

---

**SETTLEMENT AGREEMENT**

**AND GENERAL RELEASE**

This SETTLEMENT AGREEMENT AND GENERAL RELEASE ("Agreement") is made by and between Plaintiff FLYNN RESTAURANT GROUP/APPLE SO CAL LLC ("Flynn"), and Defendant CITY OF REDLANDS ("the City").

**RECITALS**

This Agreement is entered into based upon the following facts:

A. Disputes and differences have arisen between Flynn and the City as a result of a police action and shooting that occurred on September 3, 2021 in one of Flynn's restaurants ("the Incident"). Flynn maintains that it has suffered property damage, incurred workers' compensation costs for its employees, and suffered other damages as a result of the Incident.

B. Flynn filed suit on March 1, 2023, in the Superior Court of the State of California, County of Riverside, by way of Petition for Relief from Late Claim, entitled *FLYNN RESTAURANT GROUP/APPLE SO CAL, LLC a subsidiary of FLYNN RESTAURANT GROUP, LP v. CITY OF REDLANDS and DOES 1 TO 20,* Case No.: CVMV2301029 ("the Action"). The Action was eventually transferred to San Bernardino County Superior Court and was assigned a new case number upon transfer: CIVSB2412340.

C. Flynn alleges in the Action that it is entitled to an award against the City for special and general damages as a result of the Incident.

D. The City denies all allegations made by Flynn in the Action.

E. Flynn and the City now wish to compromise and settle all claims which Flynn has or may have arising from or in any way related to the Incident or the Action.

F. This Agreement is intended to fully and finally resolve and settle all claims Flynn has or may have arising from or in any way related to the Incident or the Action.

G. Flynn has full authority to settle the Action on its own behalf.

H. Now, in consideration of the foregoing recitals, which are incorporated herein, the mutual understandings contained in this Settlement Agreement and other good, valuable and sufficient consideration, the Parties agree as follows:

## AGREEMENT

### 1. Settlement Payment

In consideration of the release described in Section 2, the City agrees to pay Flynn the total sum of $55,000 ("the Settlement Amount") made payable to Apple SoCal LLC. The City will pay the Settlement Amount within 30 days after full execution of this Agreement and a copy of the Flynn W-9 form. The Settlement Amount will be delivered to Flynn's counsel, Tharpe & Howell, LLP, attn: Stephanie Forman, at 15250 Ventura Boulevard, Ninth Floor, Sherman Oaks, California. Within 10 days of receipt of the check for the Settlement Amount, Flynn will file a dismissal of the entire Action with prejudice.

### 2. Release and Discharge

In consideration of the Settlement Payment, Flynn hereby releases and discharges the Cityfrom all claims of any kind, whether known or unknown, that Flynn has or may have arising from or in any way related to the Incident or the Action. The release shall extend to the City and the City's employees, agents, public officials, elected officials, successors, and insurers. The release shall be binding on Flynn and its corporate parents, affiliates, and subsidiaries and their respective successors.

### 3. Waiver of Civil Code Section 1542

Flynn acknowledges and agrees that this Agreement is a general release and a compromise of matters involving disputed issues of law and fact. Flynn further acknowledges that it has read the provisions of *California Civil Code* section 1542, and waive all rights under that law. Section 1542 provides:

> **SECTION 1542. GENERAL RELEASE; EXTENT. A GENERAL RELEASE DOES NOT EXTEND TO CLAIMS THAT THE CREDITOR OR RELEASING PARTY DOES NOT KNOW OR SUSPECT TO EXIST IN HIS OR HER FAVOR AT THE TIME OF EXECUTING THE RELEASE AND THAT, IF KNOWN BY HIM OR HER, WOULD HAVE MATERIALLY AFFECTED HIS OR HER SETTLEMENT WITH THE DEBTOR OR RELEASED PARTY.**

Flynn acknowledges that it may hereafter discover facts different from, or in addition to, those which it now believes to be true with respect to the release of claims. Flynn agrees that the foregoing release shall be and remain effective in all respects notwithstanding such different or additional facts or any discovery thereof. Flynn further acknowledges and agrees that waiver of rights under Section 1542 of the California Civil Code has been separately bargained for and is an essential and material term of this Agreement, and, without such waivers, this Agreement would not have been entered into.

**4. Warranties**

4.1 Flynn has satisfied or will satisfy from the Settlement Amount all liens third parties may have as a result of the Action or Incident, including attorney's fees and costs.

4.2 Flynn represents that all medical expenses incurred as a result of workers' compensation claims brought by Flynn employees have been paid.

4.3 In entering this Agreement, Flynn has relied solely on its own judgment and the advice of counsel concerning the extent and nature of any damages it may have sustained as a

result of the Incident or the Action. Flynn has not been influenced by any statement made by or on behalf of the City concerning the nature and extent of Flynn's damages or its right to recover such damages.

4.4 Flynn warrants and represents that it has read this Agreement in full, and that it fully agrees to be bound by the terms and conditions of the Agreement.

4.5 Flynn represents and warrants that it has the sole right and exclusive authority to execute this Agreement and to receive the Settlement Amount. Flynn has not sold, assigned, transferred, or conveyed to any third party any of its claims arising from or in any way related to the Incident or the Action.

**5. Attorneys' Fees**

Flynn and the City shall each bear their own attorneys' fees and costs arising from or in any way related to the Incident, the Action, or this Agreement.

**6. Disclaimer of Liability by the City**

Flynn understands and agrees that the City disputes the claims Flynn has made in the Action. The negotiation of this Agreement and the payment of the Settlement Amount shall not constitute an admission of liability on the part of the City.

**7. Entire Agreement**

This Agreement contains all of the terms of the settlement of the Action and Incident between Flynn and the City, and it supersedes and replaces any prior understanding, written or oral, between Flynn and the City concerning the claims arising from or in any way related to the Incident or the Action. The Agreement cannot be changed except by a subsequent written document properly executed on behalf of Flynn and the City.

**8.** Intentionally ommitted.

**9. Construction under California Law**

This Agreement is entered into in the State of California and shall be construed and interpreted in accordance with California law.

**I warrant and represent that I am authorized to sign this Agreement on behalf of Flynn Restaurant Group/Apple SoCal LLC.**

FLYNN RESTAURANT GROUP/APPLE SOCAL LLC

DATED: 08/11/2025

By: Sarah White

Its: Director of Risk Management

I warrant and represent that I am authorized to sign this Agreement on behalf of the City of Redlands.

THE CITY OF REDLANDS

DATED: 8-12-2025

By: Janice McConnell

Its: Assistant City Manager

DATES: 8-12-2025

ATTEST: Jeanne Donaldson, City Clerk

**City Council/Financing Authority Meeting** **I. 5.**

**DATE:** 09/16/2025

**TO:** Honorable Mayor and City Council Members

**SUBJECT:** Approve Final Map for Tract No. 20528 submitted by Meritage Homes. The project site is located at 1160 W. Pioneer Avenue, on the north side of Pioneer Avenue and west side of Citrus Valley High School (Development Services Director Desatnik)

---

**MOTION(S):**

If the City Council determines that staff's recommendation is appropriate, the following motion is provided:

"I move that the City Council approve the Final Map for Tract No. 20528."

**RECOMMENDATION:**

Staff recommends that City Council approve the Final Map for Tract No. 20528.

**DISCUSSION:**

The applicant is requesting approval of the Final Map for Tract No. 20528. On December 19, 2023, the City Council approved Tentative Tract Map No. 20528 to subdivide 14.62 acres into a total of 117 residential lots for detached single-family homes, plus 35 lettered lots for private alleys/drive aisles, landscaping, and open space. The project site is located to the immediate east of Interstate 210, the north side of W. Pioneer Avenue, and west side of the Citrus Valley High School stadium. The City Council adopted resolutions for the following project actions:

1. Resolution No. 8529 (Mitigated Negative Declaration);
2. Resolution No. 8530 (Socio-Economic Cost/Benefit Study);
3. Resolution No. 8531 (Agricultural Land Conversion with Measure "U" findings);
4. Resolution No. 8532 (General Plan Amendment No. 145);

5. Resolution No. 8533 (Specific Plan No. 40, Amendment 49);
6. Resolution No. 8534 (Amendment No. 1 to Specific Plan 64); and
7. Resolution No. 8535 (Tentative Tract Map No. 20528).

The owner has complied with all conditions of approval for Tentative Tract Map 20528. The Final Map (Attachment A) has been reviewed by staff and the City's contracted land surveyor. The Subdivision Improvement Agreement (Attachment B) and appropriate financial securities, including a faithful performance bond (Attachment C) as well as labor and materials bond (Attachment D) that have been prepared based on the project engineer's estimated construction costs. These securities will ensure that off-site improvements are installed when project development begins.

**ALTERNATIVES:**

City Council may deny the Final Map for Tract No. 20528.

**STRATEGIC PLAN:**

Not applicable.

**SUBMITTED BY:**
Brian Desatnik, Development Services Director

**RECOMMENDED BY:**
Charles M. Duggan Jr., City Manager

**REVIEWED BY:**
Yvette M. Abich Garcia, City Attorney
Janice McConnell, Assistant City Manager
Christopher Boatman, Assistant City Manager

**PREPARED BY:**
Sean Reilly, Principal Planner

---

**Fiscal Impact**

| | |
|---|---|
| **Fiscal Year:** | 24-25 |
| **Revenue Generating:** | No |
| **Appropriation Required Y/N:** | No |

**Discussion:**

No impact to the General Fund. The applicant paid the applicable application filing fees for processing the Final Map.

---

## Attachments

Attachment A: Tract Map No. 20528

Attachment B: Subdivision Improvement Agreement

Attachment C: Faithful Performance Bond

Attachment D: Labor and Materials Bond

Attachment E: Project Approval Resolution Nos. 8529 - 8535

AREA: 14.671 ACRES (GROSS)
11.462 ACRES (NET)
NUMBERED LOTS: 117
LETTERED LOTS: 35

# TRACT NO. 20528



IN THE CITY OF REDLANDS, COUNTY OF SAN BERNARDINO, STATE OF CALIFORNIA

BEING A SUBDIVISION OF A PORTION OF THE NORTHWEST 1/4 OF THE SOUTHEAST 1/4 OF SECTION 16, TOWNSHIP 1 SOUTH, RANGE 3 WEST, SAN BERNARDINO BASE AND MERIDIAN

NOTE

SEE SHEET 2 FOR BASIS OF BEARINGS, BOUNDARY ESTABLISHMENT, REFERENCES AND LEGEND

SEE SHEET 8 FOR EASEMENT NOTES

HUITT ZOLLARS

DATE OF SURVEY: AUGUST, 2021

## OWNERSHIP CERTIFICATE:

WE HEREBY STATE THAT WE ARE ALL AND THE ONLY PARTIES HAVING ANY RECORD TITLE INTEREST IN THE LAND SUBDIVIDED AS SHOWN ON THIS MAP, AND WE CONSENT TO THE PREPARATION AND RECORDATION OF THIS FINAL MAP.

WE HEREBY DEDICATE TO THE CITY OF REDLANDS AN EASEMENT FOR PUBLIC ROADS AND PUBLIC UTILITY PURPOSES DOMESTIC AVENUE, LIMETTA LANE, ORANGELO COURT, PIONEER AVENUE AS SHOWN ON THIS MAP.

WE ALSO DEDICATE TO THE CITY OF REDLANDS AN EASEMENT FOR PUBLIC UTILITY, WATER, AND SEWER PURPOSES AS SHOWN ON THIS MAP.

WE ALSO DEDICATE TO THE CITY OF REDLANDS AN EASEMENT FOR STORM DRAIN PURPOSES SHOWN ON THIS MAP.

WE ALSO HEREBY DEDICATE IN FEE SIMPLE TO THE CITY OF REDLANDS LOT F FOR PARK PURPOSES AS SHOWN ON THIS MAP.

WE ALSO HEREBY RESERVE TO OURSELVES, OUR HEIRS AND ASSIGNS, THE FOLLOWING:

AN EASEMENT FOR OPEN SPACE PURPOSES LOTS A, B, C, D, E, G, AND H, AS DELINEATED ON THIS MAP;

AN EASEMENT FOR INFILTRATION BASIN PURPOSES LOT I, AS DELINEATED ON THIS MAP;

AN EASEMENT FOR INGRESS AND EGRESS, STORM DRAIN, AND LANDSCAPE MAINTENANCE PURPOSES OVER LOTS AA THROUGH AZ, INCLUSIVE, AS DELINEATED ON THIS MAP.

MERITAGE HOMES OF CALIFORNIA, INC., A CALIFORNIA CORPORATION

BY: _____ BY: _____

PRINT NAME: Nick Emsiek PRINT NAME: _____

PRINT TITLE: President PRINT TITLE: _____

## NOTARY ACKNOWLEDGEMENT

A NOTARY PUBLIC OR OTHER OFFICER COMPLETING THIS CERTIFICATE VERIFIES ONLY THE IDENTITY OF THE INDIVIDUAL WHO SIGNED THE DOCUMENT TO WHICH THIS CERTIFICATE IS ATTACHED, AND NOT THE TRUTHFULNESS, ACCURACY, OR VALIDITY OF THAT DOCUMENT.

STATE OF California

COUNTY OF Orange

ON July 29th, 2025 BEFORE ME, Jonathan Paul Fang,

A NOTARY PUBLIC, PERSONALLY APPEARED Nick Emsiek

WHO PROVED TO ME ON THE BASIS OF SATISFACTORY EVIDENCE TO BE THE PERSON(S) WHOSE NAME(S) IS/ARE SUBSCRIBED TO THE WITHIN INSTRUMENT AND ACKNOWLEDGED TO ME THAT HE/SHE/THEY EXECUTED THE SAME IN HIS/HER/THEIR AUTHORIZED CAPACITY(IES), AND THAT BY HIS/HER/THEIR SIGNATURE(S) ON THE INSTRUMENT THE PERSON(S), OR THE ENTITY UPON BEHALF OF WHICH THE PERSON(S) ACTED, EXECUTED THE INSTRUMENT.

I CERTIFY UNDER PENALTY OF PERJURY UNDER THE LAWS OF THE STATE OF CALIFORNIA THAT THE FOREGOING PARAGRAPH IS TRUE AND CORRECT.

WITNESS MY HAND AND OFFICIAL SEAL.

PRINT NAME Jonathan Paul Fang SIGNATURE _____

MY COMMISSION EXPIRES: May 28, 2027

MY COMMISSION NUMBER: 2448174

MY PRINCIPAL PLACE OF BUSINESS IS IN Orange COUNTY.

JONATHAN PAUL FANG
COMM # 2448174
ORANGE County
California Notary Public
Comm Exp May 28, 2027

## CITY COUNCIL'S CERTIFICATE:

I HEREBY CERTIFY THAT THE CITY COUNCIL OF THE CITY OF REDLANDS BY COUNCIL ACTION ADOPTED ON _____, APPROVED THIS MAP AND ACCEPTED THE EASEMENT FOR PUBLIC ROADS AND PUBLIC UTILITY PURPOSES, SUBJECT TO IMPROVEMENT IN ACCORDANCE WITH CITY STANDARDS DOMESTIC AVENUE, LIMETTA LANE, ORANGELO COURT, PIONEER AVENUE AS SHOWN ON THIS MAP.

ALSO ACCEPTED THE EASEMENTS FOR STORM DRAIN PURPOSES; PUBLIC UTILITY, WATER, AND SEWER PURPOSES SHOWN ON THIS MAP.

ALSO ACCEPTED, IN FEE SIMPLE, LOT F FOR PARK PURPOSES.

_____

JEANNE DONALDSON DATE
CITY CLERK OF THE CITY OF REDLANDS

## ABANDONMENT CERTIFICATE

THIS IS TO CERTIFY THAT PURSUANT TO SECTION 66434(g) OF THE SUBDIVISION MAP ACT, THE FILING OF THIS TRACT MAP CONSTITUTES ABANDONMENT OF THAT CERTAIN EASEMENT FOR ROADWAY PURPOSES DEDICATED TO AND ACCEPTED BY THE CITY OF REDLANDS IN THE DOCUMENT ENTITLED "GRANT OF ROADWAY EASEMENT" RECORDED AUGUST 16, 2022 AS INSTRUMENT NO. 2022-0281373, OF OFFICIAL RECORDS; LYING WITHIN THE EXTERIOR BOUNDARY OF THIS SUBDIVISION NOT SHOWN ON THIS MAP.

DATE: _____, 2025 _____
CITY CLERK, CITY OF REDLANDS

## SURVEYOR'S STATEMENT:

THIS MAP WAS PREPARED BY ME OR UNDER MY DIRECTION AND IS BASED UPON A FIELD SURVEY IN CONFORMANCE WITH THE REQUIREMENTS OF THE SUBDIVISION MAP ACT AND LOCAL ORDINANCE AT THE REQUEST OF MLC HOLDINGS, INC., ON APRIL, 2021. I HEREBY STATE THAT ALL THE MONUMENTS ARE OF THE CHARACTER AND OCCUPY OR THAT THEY WILL BE SET IN THOSE POSITIONS WITHIN ONE YEAR OF THE FILING OF THIS MAP, AND THAT THE MONUMENTS ARE, OR WILL BE, SUFFICIENT TO ENABLE THE SURVEY TO BE RETRACED, AND THAT THIS FINAL MAP SUBSTANTIALLY CONFORMS TO THE CONDITIONALLY APPROVED TENTATIVE MAP.

DATED THIS 25TH DAY OF July, 2025.

DAVID W. MACKEY, P.L.S. 8912

PROFESSIONAL LAND SURVEYOR DAVID W. MACKEY NO. 8912 STATE OF CALIFORNIA

## CITY ENGINEER'S STATEMENT:

I HEREBY STATE THAT I HAVE EXAMINED THIS MAP, THAT THE SUBDIVISION SHOWN THEREON IS SUBSTANTIALLY THE SAME AS IT APPEARED ON THE TENTATIVE MAP AND ANY APPROVED ALTERATIONS THERETO, AND THAT ALL PROVISIONS OF THE SUBDIVISION MAP ACT AND THE CITY OF REDLANDS MUNICIPAL CODE HAVE BEEN COMPLIED WITH.

DATE: 8-7-2025

GOUTAM K. DOBEY, CITY ENGINEER
CITY OF REDLANDS - R.C.E. 75646

REGISTERED PROFESSIONAL ENGINEER GOUTAM K. DOBEY NO. 75646 CIVIL STATE OF CALIFORNIA

I AM SATISFIED THAT THIS MAP IS TECHNICALLY CORRECT.

DATE: 8-5-25

MITCHAL L. CASSEL, CONTRACT SURVEYOR - P.L.S. 7504

PROFESSIONAL LAND SURVEYOR MITCHAL L. CASSEL NO. 7504 STATE OF CALIFORNIA

## AUDITOR'S-CONTROLLER/TREASURER/TAX COLLECTOR'S CERTIFICATE:

I HEREBY CERTIFY THAT ACCORDING TO THE RECORDS OF THE OFFICE, AS OF THIS DATE, THERE ARE NO LIENS AGAINST THE REAL PROPERTY SHOWN UPON THIS MAP FOR UNPAID STATE, COUNTY, MUNICIPAL, OR LOCAL TAXES, SPECIAL ASSESSMENTS COLLECTED AS TAXES, EXCEPT TAXES OR SPECIAL ASSESSMENTS, NOT YET PAYABLE, ESTIMATED TO BE $_____.

ENSEN MASON, AUDITOR-CONTROLLER/TREASURER/TAX COLLECTOR
SAN BERNARDINO COUNTY

BY: _____
DEPUTY DATE

## BOARD OF SUPERVISORS CERTIFICATE:

I HEREBY CERTIFY THAT A BOND IN THE SUM OF $_____ HAS BEEN EXECUTED AND FILED WITH THE BOARD OF SUPERVISORS OF SAN BERNARDINO COUNTY, STATE OF CALIFORNIA, CONDITIONED UPON THE PAYMENT OF ALL TAXES, (STATE, COUNTY, MUNICIPAL OR LOCAL), AND ALL SPECIAL ASSESSMENTS, COLLECTED AS TAXES, WHICH AT THE TIME OF THE FILING OF THIS MAP WITH SAN BERNARDINO COUNTY ASSESSOR-RECORDER-COUNTY CLERK ARE A LIEN AGAINST SAID PROPERTY, BUT NOT YET PAYABLE AND THAT THE SUBDIVIDER HAS FILED WITH ME A CERTIFICATE BY THE PROPER OFFICER GIVING HIS ESTIMATE OF THE AMOUNT OF SAID TAXES AND SPECIAL ASSESSMENTS, AND SAID BOND IS HEREBY ACCEPTED.

LYNNA MONELL
CLERK OF THE BOARD OF SUPERVISORS
SAN BERNARDINO COUNTY

BY: _____
DEPUTY DATE

## SIGNATURE OMISSIONS

1. SOUTHERN CALIFORNIA EDISON COMPANY, HOLDER OF AN EASEMENT FOR ELECTRICAL SYSTEMS AND INCIDENTAL PURPOSES, RECORDED NOVEMBER 18, 1954 IN BOOK 3509, PAGE 400 OF OFFICIAL RECORDS.
2. C.S. LOMBARD, HOLDER OF AN EASEMENT FOR PIPE LINE PURPOSES, RECORDED JUNE 2, 1900, IN BOOK 286, PAGE 264, OFFICIAL RECORDS.
3. ANNA K. FINKBEINER, JEANNIE E. RONZONE, AND AUGUSTA SCHACHT, HOLDER OF AN EASEMENT FOR PIPE LINE PURPOSES, RECORDED DECEMBER 8, 1933, IN BOOK 920, PAGE 378, OFFICIAL RECORDS.

## SAN BERNARDINO COUNTY RECORDER'S CERTIFICATE:

THIS MAP HAS BEEN FILED UNDER DOCUMENT NUMBER _____,
THIS _____ DAY OF _____, __, AT _____.M., IN BOOK ___
OF _____ AT PAGE _____, AT THE REQUEST OF
_____, IN THE AMOUNT OF $ _____.

JOSIE GONZALES
ASSESSOR-RECORDER-COUNTY CLERK
SAN BERNARDINO COUNTY

BY: _____
DEPUTY RECORDER

# TRACT NO. 20528

IN THE CITY OF REDLANDS, COUNTY OF SAN BERNARDINO, STATE OF CALIFORNIA

BEING A SUBDIVISION OF A PORTION OF THE NORTHWEST 1/4 OF THE SOUTHEAST 1/4 OF SECTION 16, TOWNSHIP 1 SOUTH, RANGE 3 WEST, SAN BERNARDINO BASE AND MERIDIAN

HUITT ZOLLARS

DATE OF SURVEY: AUGUST, 2021

AREA: 14.671 ACRES (GROSS)
11.462 ACRES (NET)
NUMBERED LOTS: 117
LETTERED LOTS: 35

## MONUMENT NOTES

● DENOTES FOUND MONUMENT AS NOTED

○ DENOTES SET 1" IRON PIPE AND TAG "PLS 8912", FLUSH, UNLESS SHOWN OTHERWISE, STREET CENTERLINE MONUMENTS SET 1/4" BELOW PAVEMENT SURFACE.

SET 1" IRON PIPE AND TAG "PLS 8912" OR LEAD, TACK, AND TAG, "PLS 8912" AT ALL LOT CORNERS AND ANGLE POINTS IN SIDE LOT LINES EXCEPT SET LEAD, TACK, AND TAG, "PLS 8912" IN TOP OF CURB ON PROLONGATION OF SIDE LOT LINES IN LIEU OF FRONT PROPERTY CORNERS.

SEARCHED FOUND NOTHING AT ALL PROPERTY CORNERS UNLESS SHOWN OTHERWISE.

## BASIS OF BEARINGS:

BASIS OF BEARINGS: BEARINGS SHOWN HEREON ARE BASED ON THE BEARING BETWEEN SOPAC CONTROL STATIONS RTHS AND CRFP BEING NORTH 77°05'25" WEST.

## DATUM STATEMENT:

THE COORDINATES OF THE FIELD SURVEY REFERENCED HEREON ARE BASED ON THE CALIFORNIA COORDINATE SYSTEM (CCS83), ZONE 5, NAD83 DATUM, 2017.5 EPOCH.

ALL DISTANCES SHOWN ARE GROUND, UNLESS NOTED OTHERWISE. TO OBTAIN A GRID DISTANCE, MULTIPLY THE GROUND DISTANCE BY THE COMBINED SCALE FACTOR OF 0.9999035889 (PROJECT SPECIFIC).

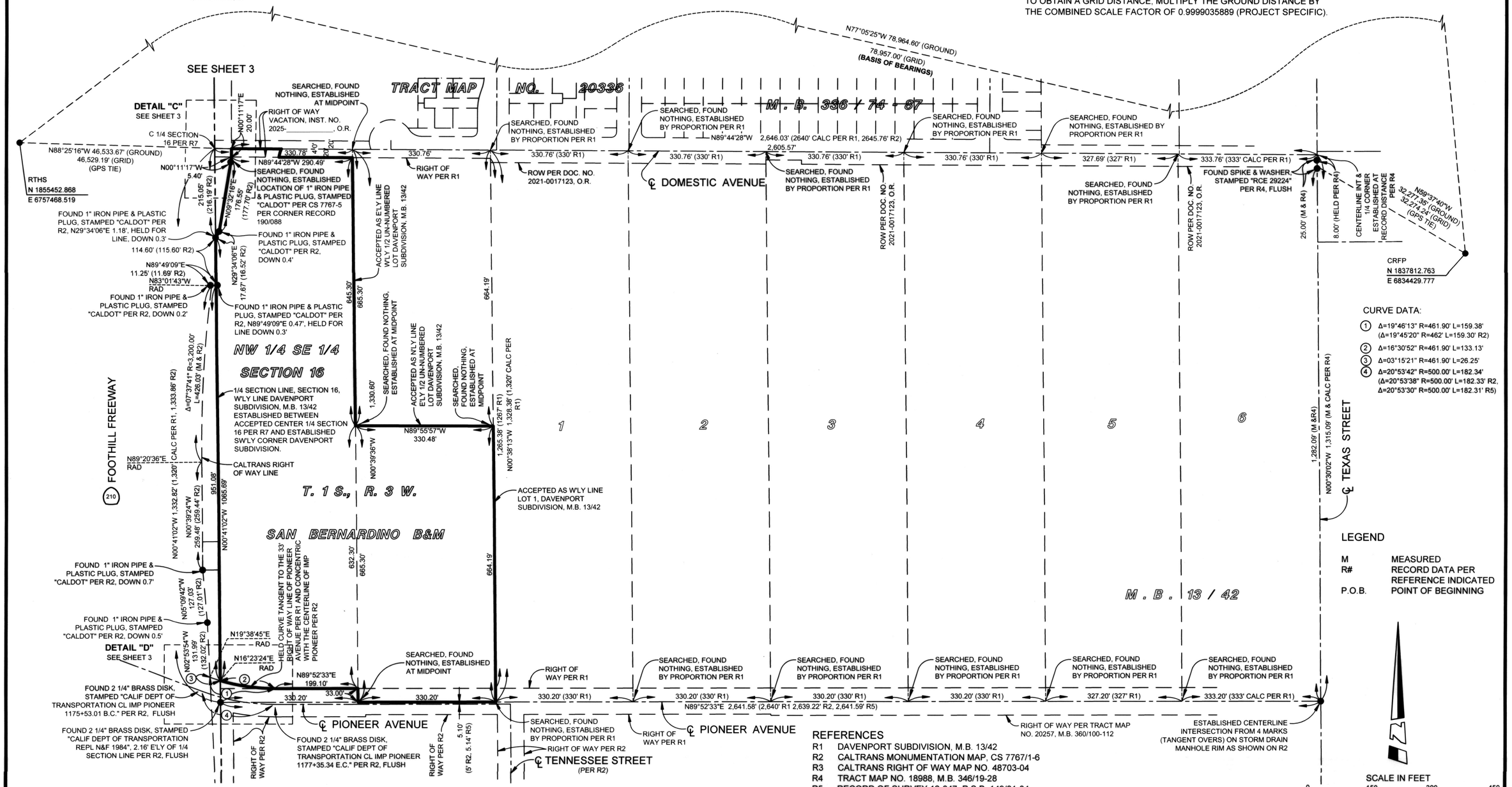


## REFERENCES

R1 DAVENPORT SUBDIVISION, M.B. 13/42
R2 CALTRANS MONUMENTATION MAP, CS 7767/1-6
R3 CALTRANS RIGHT OF WAY MAP NO. 48703-04
R4 TRACT MAP NO. 18988, M.B. 346/19-28
R5 RECORD OF SURVEY 12-047, R.S.B. 149/81-84
R6 GRANT DEED, INST. NO. 81-126756, O.R. (REC. 6/10/1981)
R7 TRACT MAP NO. 20336, M.B. 336/74-87

AREA: 14.671 ACRES (GROSS)
11.462 ACRES (NET)
NUMBERED LOTS: 117
LETTERED LOTS: 35

# TRACT NO. 20528



IN THE CITY OF REDLANDS, COUNTY OF SAN BERNARDINO, STATE OF CALIFORNIA

BEING A SUBDIVISION OF A PORTION OF THE NORTHWEST 1/4 OF THE SOUTHEAST 1/4 OF SECTION 16, TOWNSHIP 1 SOUTH, RANGE 3 WEST, SAN BERNARDINO BASE AND MERIDIAN

NOTES
1. SEE SHEET 2 FOR BASIS OF BEARINGS, BOUNDARY ESTABLISHMENT, REFERENCES, AND LEGEND.
2. SEE SHEET 4 FOR LAND USE TABLE.
3. SEE SHEET 9 EASEMENT NOTES.
4. SEE SHEET 9-10 FOR EASEMENT LOCATIONS AND DETAILS.

HUITT ZOLLARS

DATE OF SURVEY: AUGUST, 2021

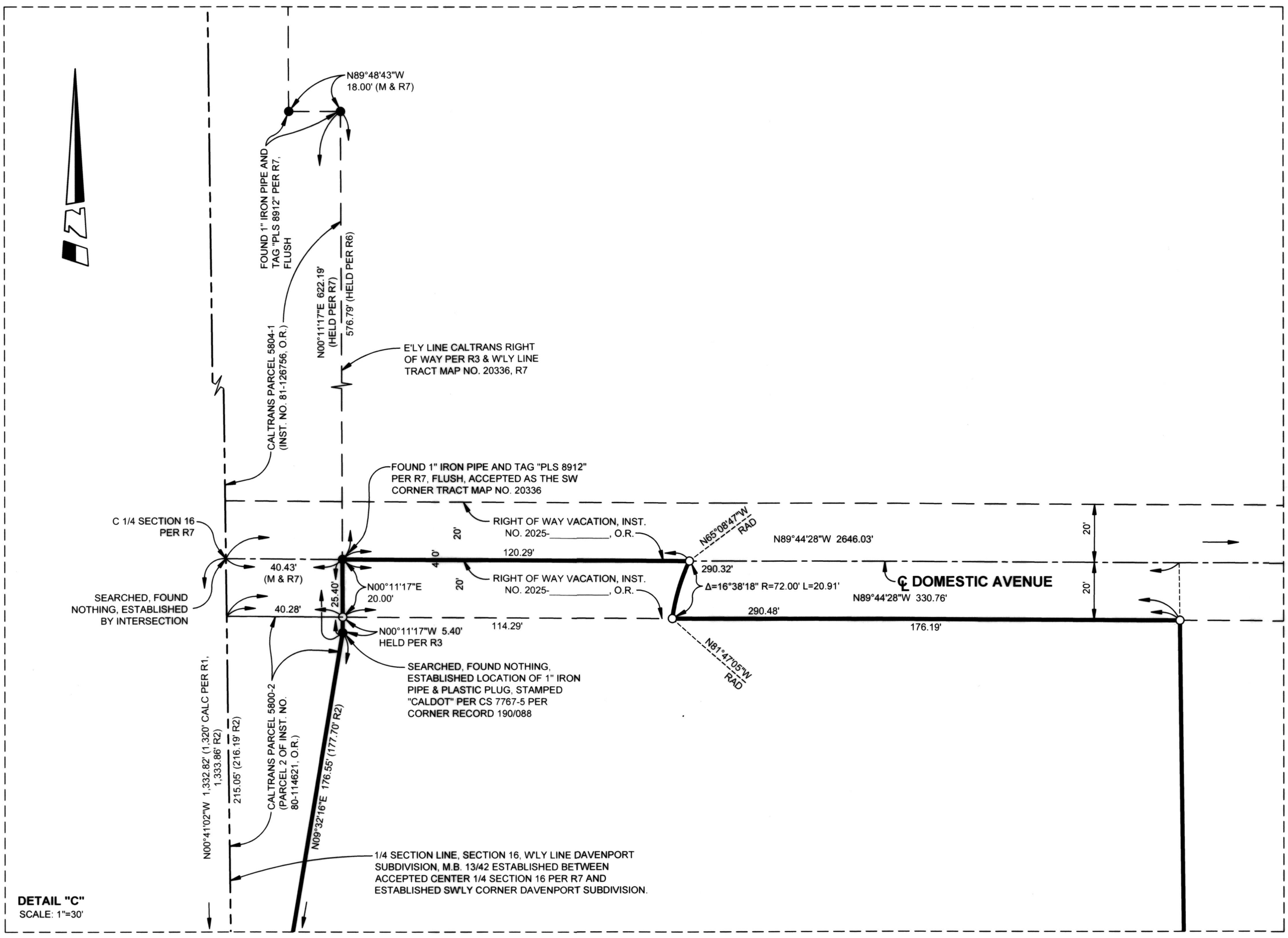


**DETAIL "C"**
SCALE: 1"=30'

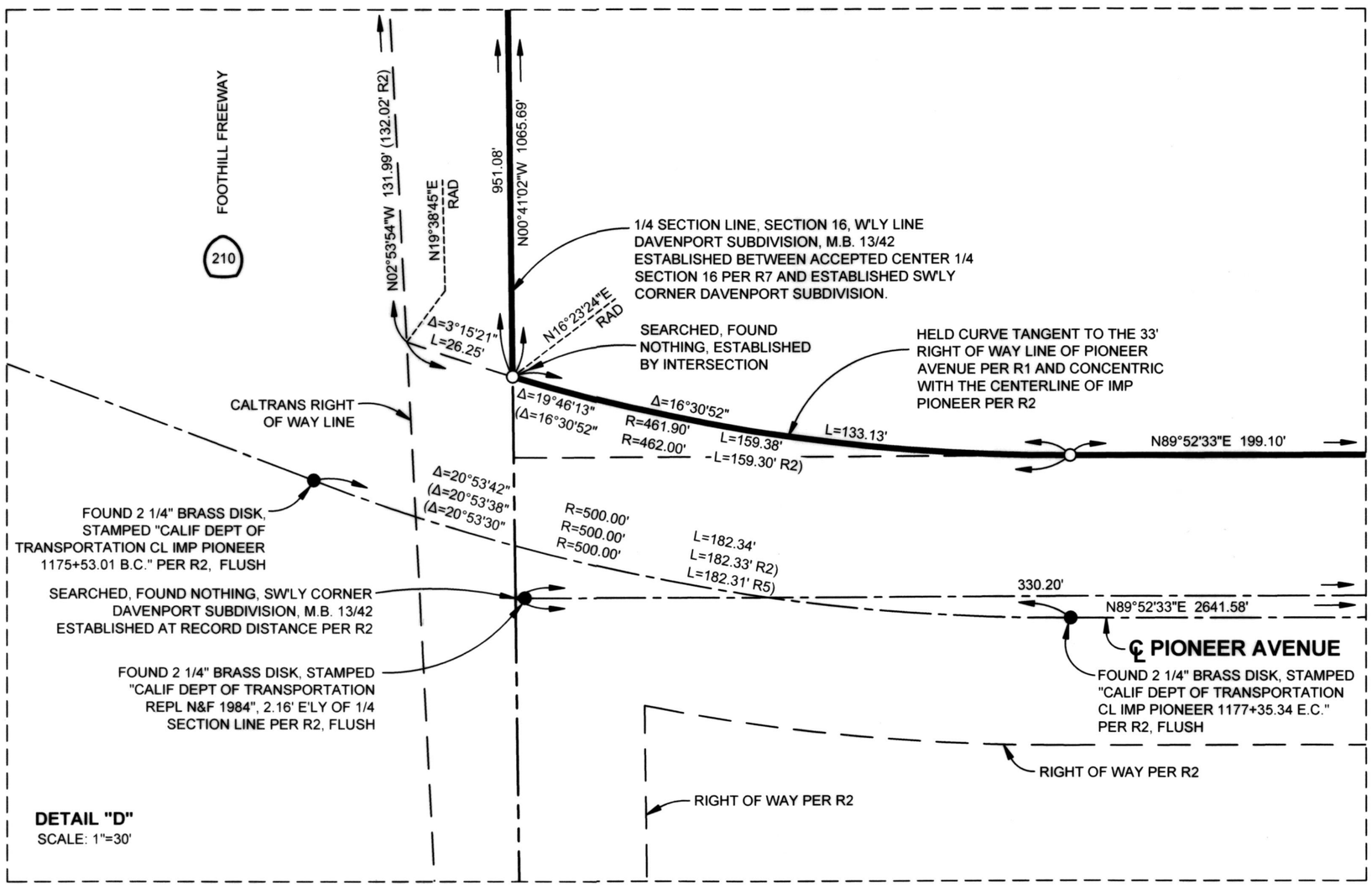


**DETAIL "D"**
SCALE: 1"=30'

AREA: 14.671 ACRES (GROSS)
11.462 ACRES (NET)
NUMBERED LOTS: 117
LETTERED LOTS: 35

# TRACT NO. 20528



IN THE CITY OF REDLANDS, COUNTY OF SAN BERNARDINO, STATE OF CALIFORNIA

BEING A SUBDIVISION OF A PORTION OF THE NORTHWEST 1/4 OF THE SOUTHEAST 1/4 OF SECTION 16, TOWNSHIP 1 SOUTH, RANGE 3 WEST, SAN BERNARDINO BASE AND MERIDIAN

NOTES
1. SEE SHEET 2 FOR BASIS OF BEARINGS, BOUNDARY ESTABLISHMENT, REFERENCES, AND LEGEND.
2. SEE SHEET 3 FOR BOUNDARY DETAILS.
3. SEE SHEET 9 EASEMENT NOTES.
4. SEE SHEET 9-10 FOR EASEMENT LOCATIONS AND DETAILS.

HUITT ZOLLARS

DATE OF SURVEY: AUGUST, 2021

SCALE IN FEET
0 80 160 240
SCALE: 1" = 80'

SHEET INDEX MAP

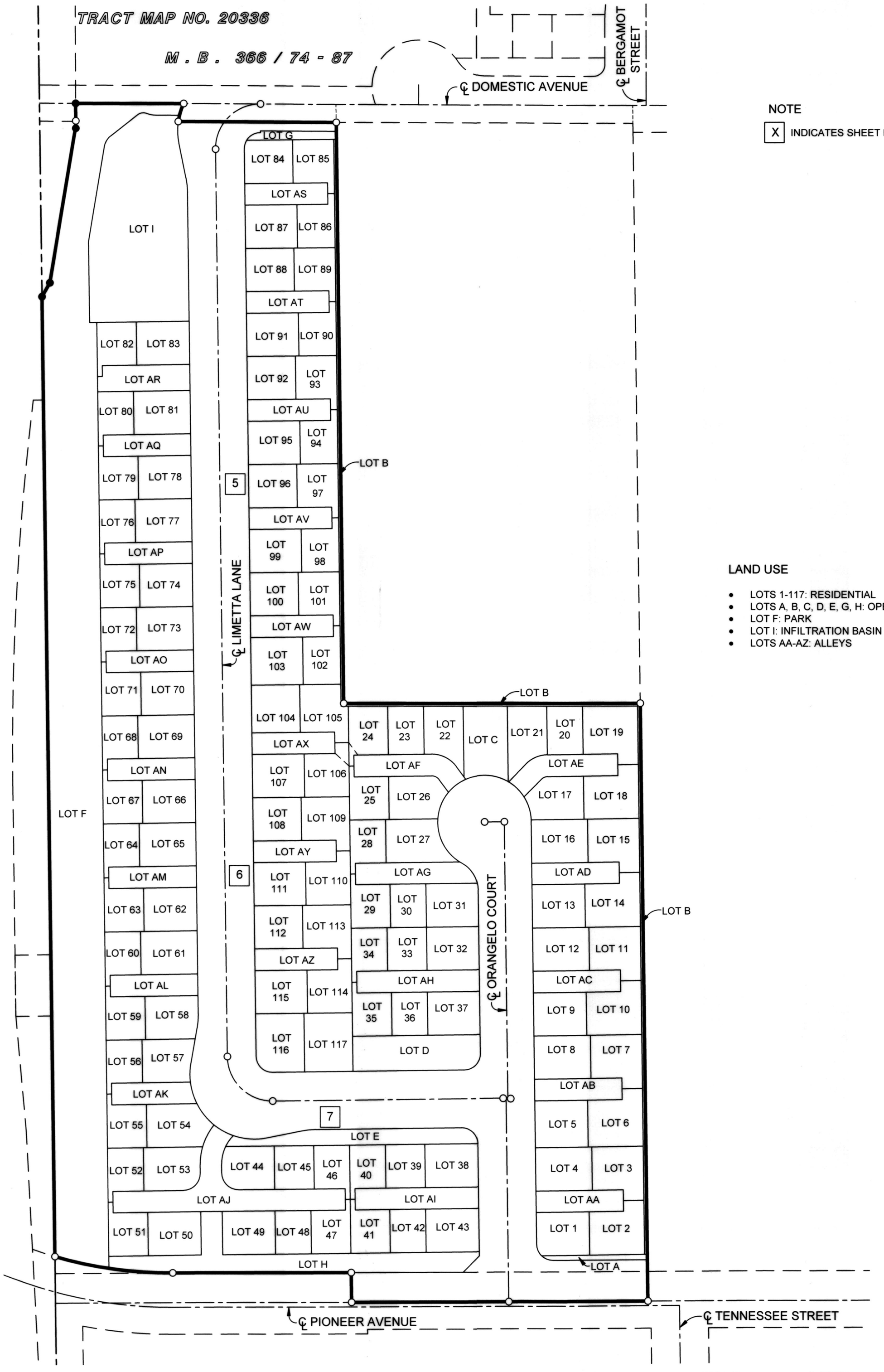


NOTE

X INDICATES SHEET NUMBER

LAND USE

- LOTS 1-117: RESIDENTIAL
- LOTS A, B, C, D, E, G, H: OPEN SPACE
- LOT F: PARK
- LOT I: INFILTRATION BASIN
- LOTS AA-AZ: ALLEYS

AREA: 14.671 ACRES (GROSS)
11.462 ACRES (NET)
NUMBERED LOTS: 117
LETTERED LOTS: 35

# TRACT NO. 20528



IN THE CITY OF REDLANDS, COUNTY OF SAN BERNARDINO, STATE OF CALIFORNIA

BEING A SUBDIVISION OF A PORTION OF THE NORTHWEST 1/4 OF THE SOUTHEAST 1/4 OF SECTION 16, TOWNSHIP 1 SOUTH, RANGE 3 WEST, SAN BERNARDINO BASE AND MERIDIAN

NOTES
1. SEE SHEET 2 FOR BASIS OF BEARINGS, BOUNDARY ESTABLISHMENT, REFERENCES, AND LEGEND.
2. SEE SHEET 3 FOR BOUNDARY DETAILS.
3. SEE SHEET 4 FOR LAND USE TABLE.
4. SEE SHEET 9 EASEMENT NOTES.
5. SEE SHEET 9-10 FOR EASEMENT LOCATIONS AND DETAILS.

HUITT ZOLLARS

DATE OF SURVEY: AUGUST, 2021

SCALE IN FEET
0 40 80 120
SCALE: 1" = 40'

COURSE AND CURVE DATA (THIS SHEET ONLY)

1. N00°39'36"W 24.00'
2. N00°39'36"W 12.00'
3. N00°39'36"W 48.00'
4. N00°15'32"E 2.00'
5. Δ=90°55'08" R=18.00' L=28.56'
6. Δ=58°40'09" R=18.00' L=18.43'
7. Δ=32°14'59" R=18.00' L=10.13'
8. N00°39'36"W 10.00'
9. Δ=37°47'20" R=50.00' L=32.98'
10. Δ=59°13'27" R=10.00' L=10.34'
11. Δ=20°40'30" R=31.00' L=11.19'
12. N89°44'28"W 25.96'
13. Δ=10°57'55" R=72.00' L=13.78'
14. Δ=25°15'04" R=72.00' L=31.73'
15. Δ=16°38'18" R=72.00' L=20.91'
16. Δ=36°12'59" R=72.00' L=45.51'
17. Δ=53°07'48" R=50.00' L=46.36'
18. Δ=90°55'08" R=50.00' L=79.34'
19. Δ=19°34'41" R=72.00' L=24.60'

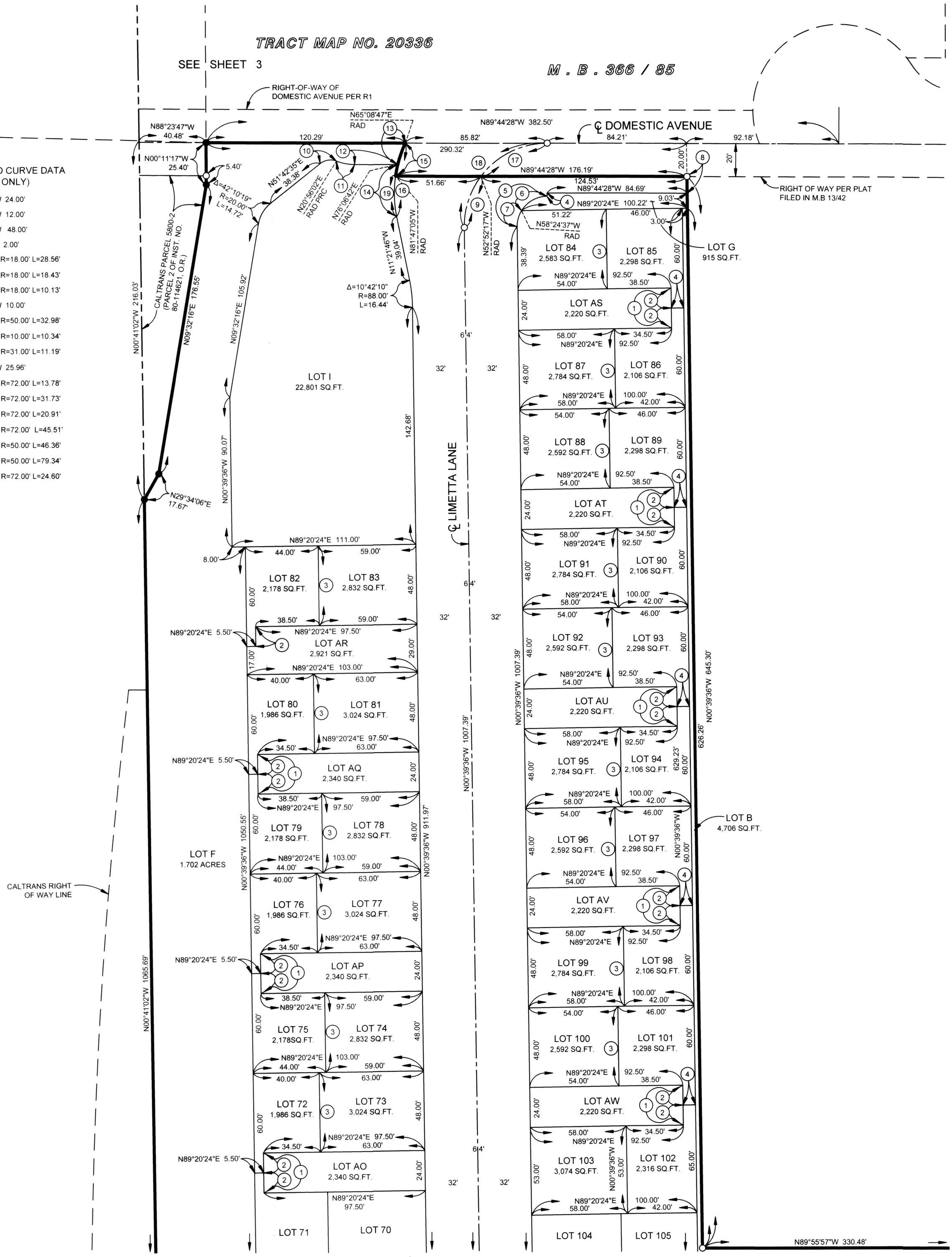


SEE SHEET 6

# TRACT NO. 20528

IN THE CITY OF REDLANDS, COUNTY OF SAN BERNARDINO, STATE OF CALIFORNIA

BEING A SUBDIVISION OF A PORTION OF THE NORTHWEST 1/4 OF THE SOUTHEAST 1/4 OF SECTION 16, TOWNSHIP 1 SOUTH, RANGE 3 WEST, SAN BERNARDINO BASE AND MERIDIAN

AREA: 14.671 ACRES (GROSS)
11.462 ACRES (NET)
NUMBERED LOTS: 117
LETTERED LOTS: 35

NOTES
1. SEE SHEET 2 FOR BASIS OF BEARINGS, BOUNDARY ESTABLISHMENT, REFERENCES, AND LEGEND.
2. SEE SHEET 3 FOR BOUNDARY DETAILS.
3. SEE SHEET 4 FOR LAND USE TABLE.
4. SEE SHEET 9 EASEMENT NOTES.
5. SEE SHEET 9-10 FOR EASEMENT LOCATIONS AND DETAILS.

HUITT ZOLLARS

DATE OF SURVEY: AUGUST, 2021

SCALE IN FEET
0 40 80 120
SCALE: 1" = 40'

COURSE AND CURVE DATA (THIS SHEET ONLY)

1. N00°39'36"W 24.00'
2. N00°39'36"W 12.00'
3. N00°39'36"W 48.00'
4. N89°20'24"E 5.50'
5. N00°39'36"W 12.00'
6. Δ=10°42'10" R=86.00' L=16.06'
7. N00°39'36"W 54.11'
8. N00°39'36"W 53.61'
9. N89°20'24"E 86.50'
10. Δ=53°55'09" R=34.00' L=32.00'
11. N89°20'24"E 15.50'
12. Δ=53°55'09" R=10.00' L=9.41'
13. Δ=61°58'56" R=52.00' L=56.25'
14. Δ=65°03'14" R=52.00' L=59.04'
15. Δ=35°54'09" R=52.00' L=32.58'
16. Δ=26°41'05" R=52.00' L=24.22'
17. Δ=54°01'09" R=52.00' L=49.03'
18. Δ=29°38'29" R=52.00' L=26.90'
19. Δ=1°57'36" R=52.00' L=1.78'
20. Δ=47°23'16" R=35.00' L=28.95'
21. Δ=12°59'30" R=35.00' L=7.94'
22. Δ=240°22'46" R=52.00' L=218.16'
23. Δ=44°56'38" R=34.00' L=26.67'
24. N44°23'46"E 27.76'
25. Δ=60°22'46" R=35.00' L=36.88'
26. Δ=3°04'18" R=52.00' L=2.79'
27. Δ=44°56'38" R=10.00' L=7.84'
28. N36°44'27"W 17.70'
29. Δ=240°22'46" R=52.00' L=218.16'

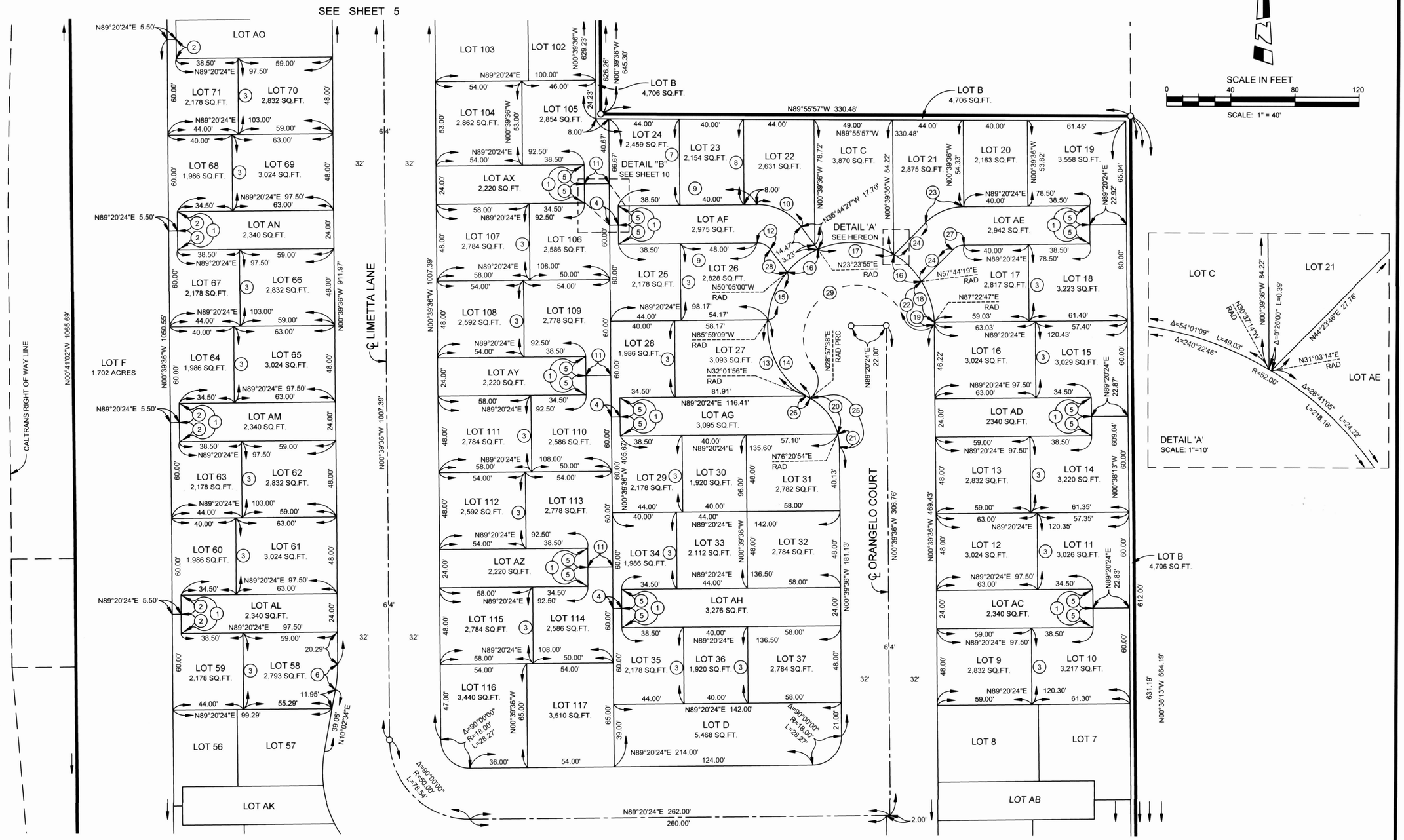

AREA: 14.671 ACRES (GROSS)
11.462 ACRES (NET)
NUMBERED LOTS: 117
LETTERED LOTS: 35

# TRACT NO. 20528



IN THE CITY OF REDLANDS, COUNTY OF SAN BERNARDINO, STATE OF CALIFORNIA

BEING A SUBDIVISION OF A PORTION OF THE NORTHWEST 1/4 OF THE SOUTHEAST 1/4 OF SECTION 16, TOWNSHIP 1 SOUTH, RANGE 3 WEST, SAN BERNARDINO BASE AND MERIDIAN

NOTES

1. SEE SHEET 2 FOR BASIS OF BEARINGS, BOUNDARY ESTABLISHMENT, REFERENCES, AND LEGEND.
2. SEE SHEET 3 FOR BOUNDARY DETAILS.
3. SEE SHEET 4 FOR LAND USE TABLE.
4. SEE SHEET 9 EASEMENT NOTES.
5. SEE SHEET 9-10 FOR EASEMENT LOCATIONS AND DETAILS.

HUITT ZOLLARS

DATE OF SURVEY: AUGUST, 2021

SCALE IN FEET
0 40 80 120
SCALE: 1" = 40'

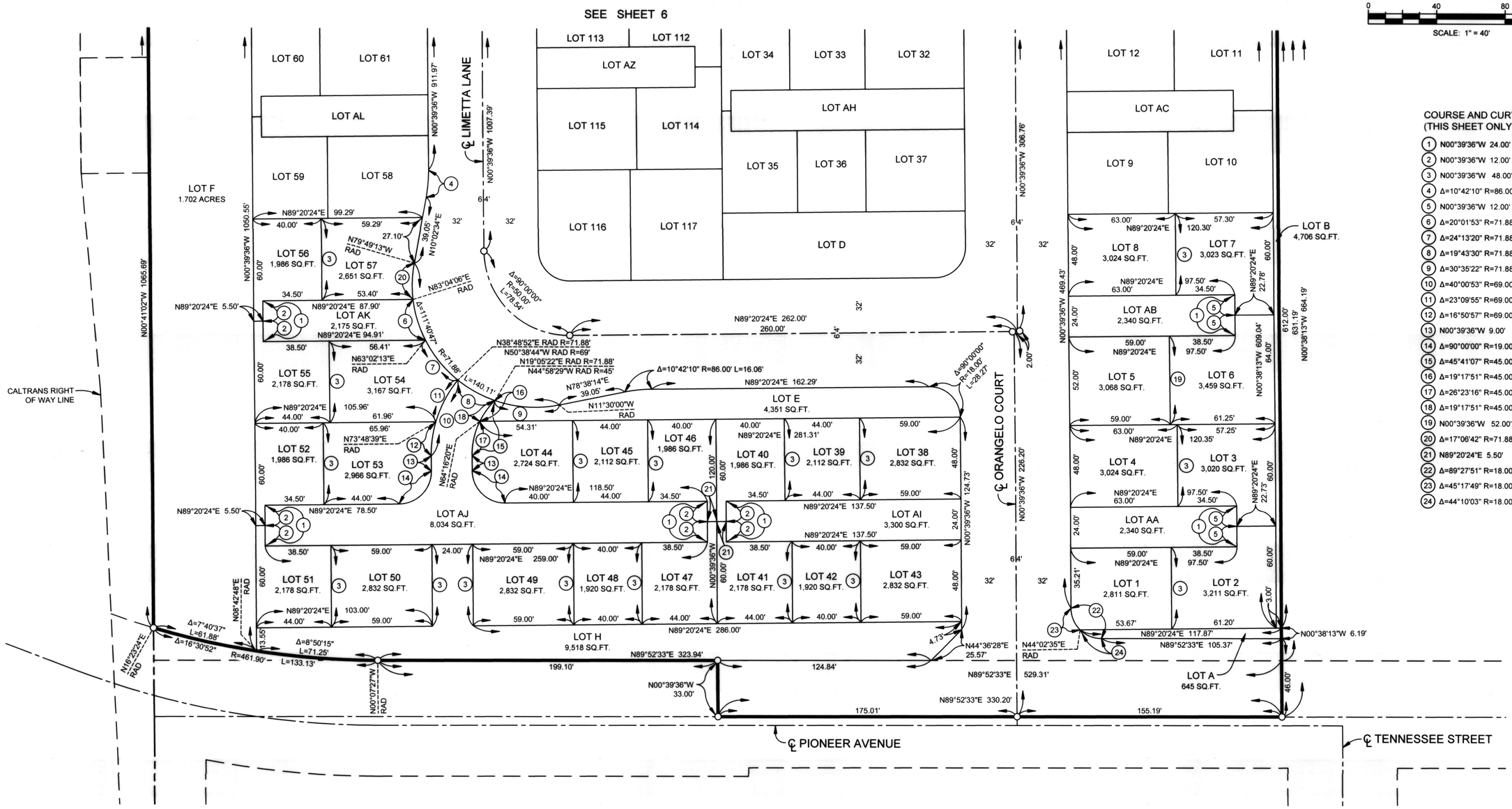


COURSE AND CURVE DATA (THIS SHEET ONLY)

1. N00°39'36"W 24.00'
2. N00°39'36"W 12.00'
3. N00°39'36"W 48.00'
4. Δ=10°42'10" R=86.00' L=16.06'
5. N00°39'36"W 12.00'
6. Δ=20°01'53" R=71.88' L=25.13'
7. Δ=24°13'20" R=71.88' L=30.39'
8. Δ=19°43'30" R=71.88' L=24.75'
9. Δ=30°35'22" R=71.88' L=38.38'
10. Δ=40°00'53" R=69.00' L=48.19'
11. Δ=23°09'55" R=69.00' L=27.90'
12. Δ=16°50'57" R=69.00' L=20.29'
13. N00°39'36"W 9.00'
14. Δ=90°00'00" R=19.00' L=29.85'
15. Δ=45°41'07" R=45.00' L=35.88'
16. Δ=19°17'51" R=45.00' L=15.16'
17. Δ=26°23'16" R=45.00' L=20.72'
18. Δ=19°17'51" R=45.00' L=15.16'
19. N00°39'36"W 52.00'
20. Δ=17°06'42" R=71.88' L=21.47'
21. N89°20'24"E 5.50'
22. Δ=89°27'51" R=18.00' L=28.11'
23. Δ=45°17'49" R=18.00' L=14.23'
24. Δ=44°10'03" R=18.00' L=13.88'

AREA: 14.671 ACRES (GROSS)
11.462 ACRES (NET)
NUMBERED LOTS: 117
LETTERED LOTS: 35

# TRACT NO. 20528



IN THE CITY OF REDLANDS, COUNTY OF SAN BERNARDINO, STATE OF CALIFORNIA

BEING A SUBDIVISION OF A PORTION OF THE NORTHWEST 1/4 OF THE SOUTHEAST 1/4 OF SECTION 16, TOWNSHIP 1 SOUTH, RANGE 3 WEST, SAN BERNARDINO BASE AND MERIDIAN

NOTES
1. SEE SHEET 2 FOR BASIS OF BEARINGS, BOUNDARY ESTABLISHMENT, REFERENCES, AND LEGEND.
2. SEE SHEET 3 FOR BOUNDARY DETAILS.
3. SEE SHEET 4 FOR LAND USE TABLE.
4. SEE SHEET 9 EASEMENT NOTES.
5. SEE SHEET 9-10 FOR EASEMENT LOCATIONS AND DETAILS.

HUITT ZOLLARS

DATE OF SURVEY: AUGUST, 2021

SCALE IN FEET
0 80 160 240
SCALE: 1" = 80'

COURSE AND CURVE DATA
(THIS SHEET ONLY)

1. Δ=90°00'00" R=50.00' L=78.54'
2. Δ=90°55'08" R=50.00' L=79.34'
3. Δ=10°57'55" R=72.00' L=13.78'
4. N89°44'28"W 25.96'
5. Δ=20°40'30" R=31.00' L=11.19'
6. Δ=59°13'27" R=10.00' L=10.34'
7. N51°42'35"E 38.38'
8. Δ=42°10'19" R=20.00' L=14.72'

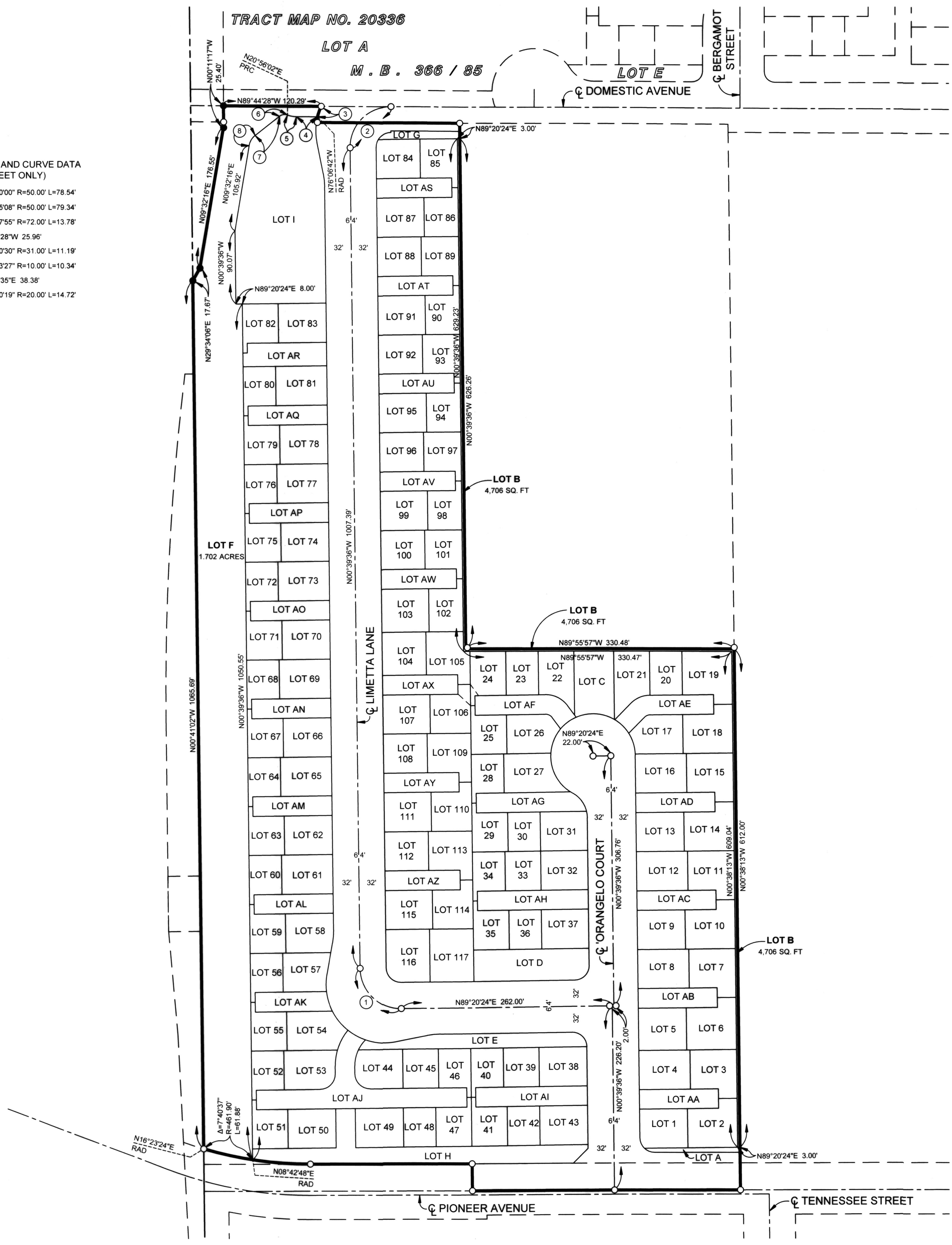

AREA: 14.671 ACRES (GROSS)
11.462 ACRES (NET)
NUMBERED LOTS: 117
LETTERED LOTS: 35

# TRACT NO. 20528



IN THE CITY OF REDLANDS, COUNTY OF SAN BERNARDINO, STATE OF CALIFORNIA

BEING A SUBDIVISION OF A PORTION OF THE NORTHWEST 1/4 OF THE SOUTHEAST 1/4 OF SECTION 16, TOWNSHIP 1 SOUTH, RANGE 3 WEST, SAN BERNARDINO BASE AND MERIDIAN

NOTES
1. SEE SHEET 2 FOR BASIS OF BEARINGS, BOUNDARY ESTABLISHMENT, REFERENCES, AND LEGEND.
2. SEE SHEET 3 FOR BOUNDARY DETAILS.
3. SEE SHEET 4 FOR LAND USE TABLE.
4. SEE SHEET 9 EASEMENT NOTES.
5. SEE SHEET 9-10 FOR EASEMENT LOCATIONS AND DETAILS.

HUITT ZOLLARS

DATE OF SURVEY: AUGUST, 2021

SCALE IN FEET
0 50 100 150
SCALE: 1" = 50'

## EASEMENT DETAIL

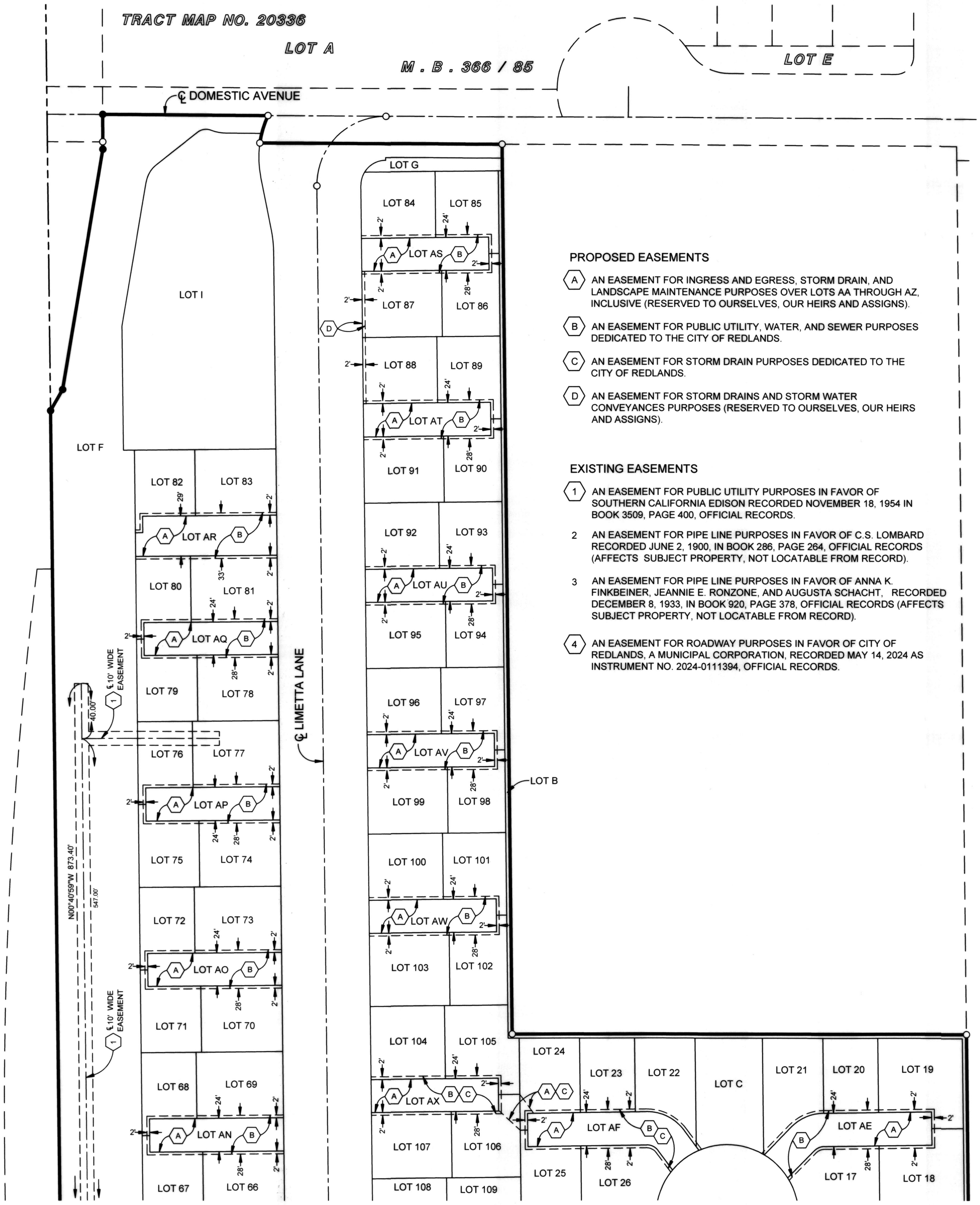


### PROPOSED EASEMENTS

(A) AN EASEMENT FOR INGRESS AND EGRESS, STORM DRAIN, AND LANDSCAPE MAINTENANCE PURPOSES OVER LOTS AA THROUGH AZ, INCLUSIVE (RESERVED TO OURSELVES, OUR HEIRS AND ASSIGNS).

(B) AN EASEMENT FOR PUBLIC UTILITY, WATER, AND SEWER PURPOSES DEDICATED TO THE CITY OF REDLANDS.

(C) AN EASEMENT FOR STORM DRAIN PURPOSES DEDICATED TO THE CITY OF REDLANDS.

(D) AN EASEMENT FOR STORM DRAINS AND STORM WATER CONVEYANCES PURPOSES (RESERVED TO OURSELVES, OUR HEIRS AND ASSIGNS).

### EXISTING EASEMENTS

(1) AN EASEMENT FOR PUBLIC UTILITY PURPOSES IN FAVOR OF SOUTHERN CALIFORNIA EDISON RECORDED NOVEMBER 18, 1954 IN BOOK 3509, PAGE 400, OFFICIAL RECORDS.

2 AN EASEMENT FOR PIPE LINE PURPOSES IN FAVOR OF C.S. LOMBARD RECORDED JUNE 2, 1900, IN BOOK 286, PAGE 264, OFFICIAL RECORDS (AFFECTS SUBJECT PROPERTY, NOT LOCATABLE FROM RECORD).

3 AN EASEMENT FOR PIPE LINE PURPOSES IN FAVOR OF ANNA K. FINKBEINER, JEANNIE E. RONZONE, AND AUGUSTA SCHACHT, RECORDED DECEMBER 8, 1933, IN BOOK 920, PAGE 378, OFFICIAL RECORDS (AFFECTS SUBJECT PROPERTY, NOT LOCATABLE FROM RECORD).

(4) AN EASEMENT FOR ROADWAY PURPOSES IN FAVOR OF CITY OF REDLANDS, A MUNICIPAL CORPORATION, RECORDED MAY 14, 2024 AS INSTRUMENT NO. 2024-0111394, OFFICIAL RECORDS.

SEE SHEET 10

AREA: 14.671 ACRES (GROSS)
11.462 ACRES (NET)
NUMBERED LOTS: 117
LETTERED LOTS: 35

# TRACT NO. 20528



IN THE CITY OF REDLANDS, COUNTY OF SAN BERNARDINO, STATE OF CALIFORNIA

BEING A SUBDIVISION OF A PORTION OF THE NORTHWEST 1/4 OF THE SOUTHEAST 1/4 OF SECTION 16, TOWNSHIP 1 SOUTH, RANGE 3 WEST, SAN BERNARDINO BASE AND MERIDIAN

NOTES
1. SEE SHEET 2 FOR BASIS OF BEARINGS, BOUNDARY ESTABLISHMENT, REFERENCES, AND LEGEND.
2. SEE SHEET 3 FOR BOUNDARY DETAILS.
3. SEE SHEET 4 FOR LAND USE TABLE.
4. SEE SHEET 9 EASEMENT NOTES.
5. SEE SHEET 9-10 FOR EASEMENT LOCATIONS AND DETAILS.

HUITT ZOLLARS

DATE OF SURVEY: AUGUST, 2021

SCALE IN FEET
0 50 100 150
SCALE: 1" = 50'

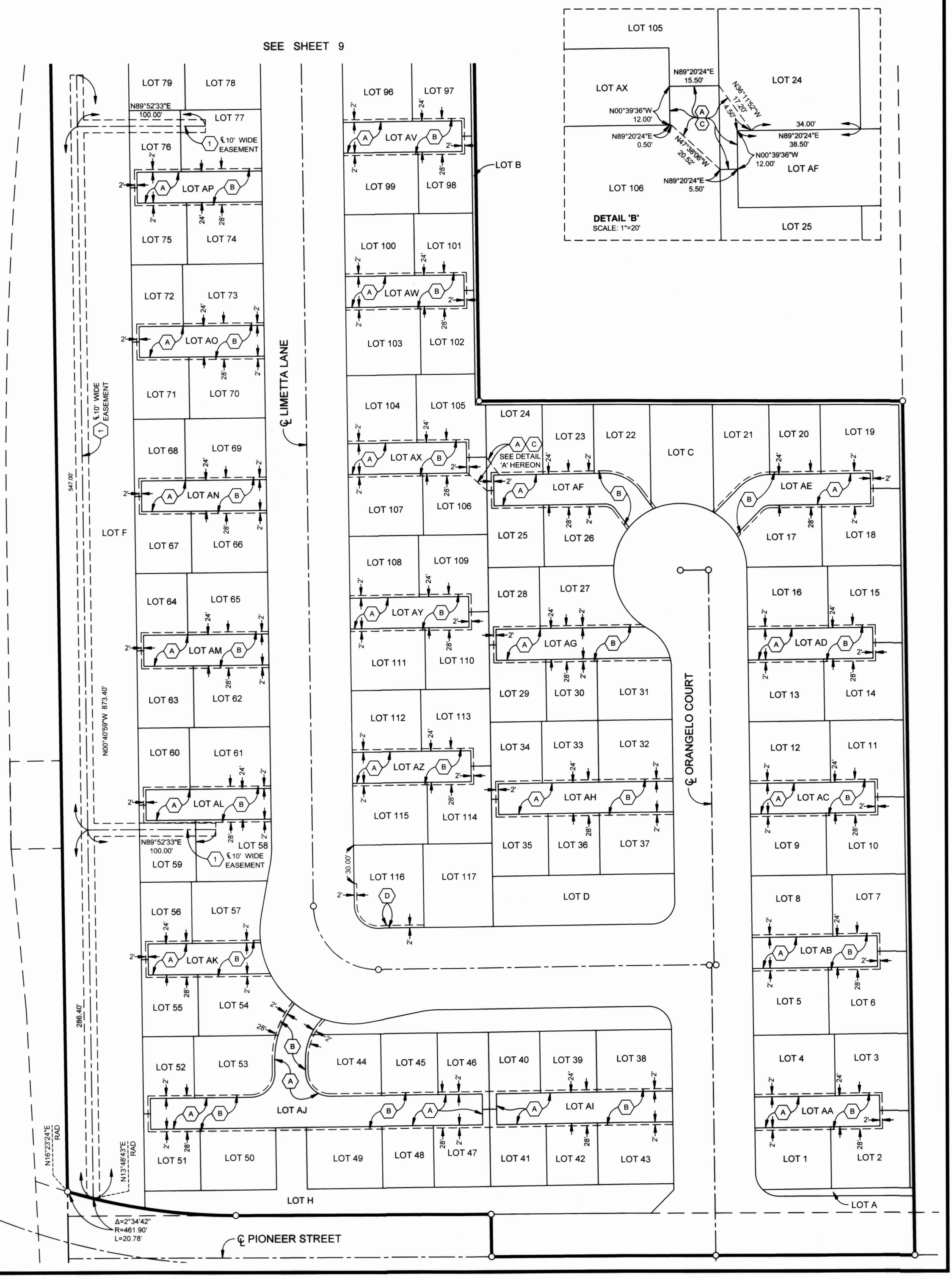

AREA: 14.671 ACRES (GROSS)
11.462 ACRES (NET)
NUMBERED LOTS: 117
LETTERED LOTS: 35

# TRACT NO. 20528



IN THE CITY OF REDLANDS, COUNTY OF SAN BERNARDINO, STATE OF CALIFORNIA

BEING A SUBDIVISION OF A PORTION OF THE NORTHWEST 1/4 OF THE SOUTHEAST 1/4 OF SECTION 16, TOWNSHIP 1 SOUTH, RANGE 3 WEST, SAN BERNARDINO BASE AND MERIDIAN

NOTES
1. SEE SHEET 2 FOR BASIS OF BEARINGS, BOUNDARY ESTABLISHMENT, REFERENCES, AND LEGEND.
2. SEE SHEET 3 FOR BOUNDARY DETAILS.
3. SEE SHEET 9 EASEMENT NOTES.
4. SEE SHEET 9-10 FOR EASEMENT LOCATIONS AND DETAILS.

HUITT ZOLLARS

DATE OF SURVEY: AUGUST, 2021

SCALE IN FEET
0 80 160 240
SCALE: 1" = 80'

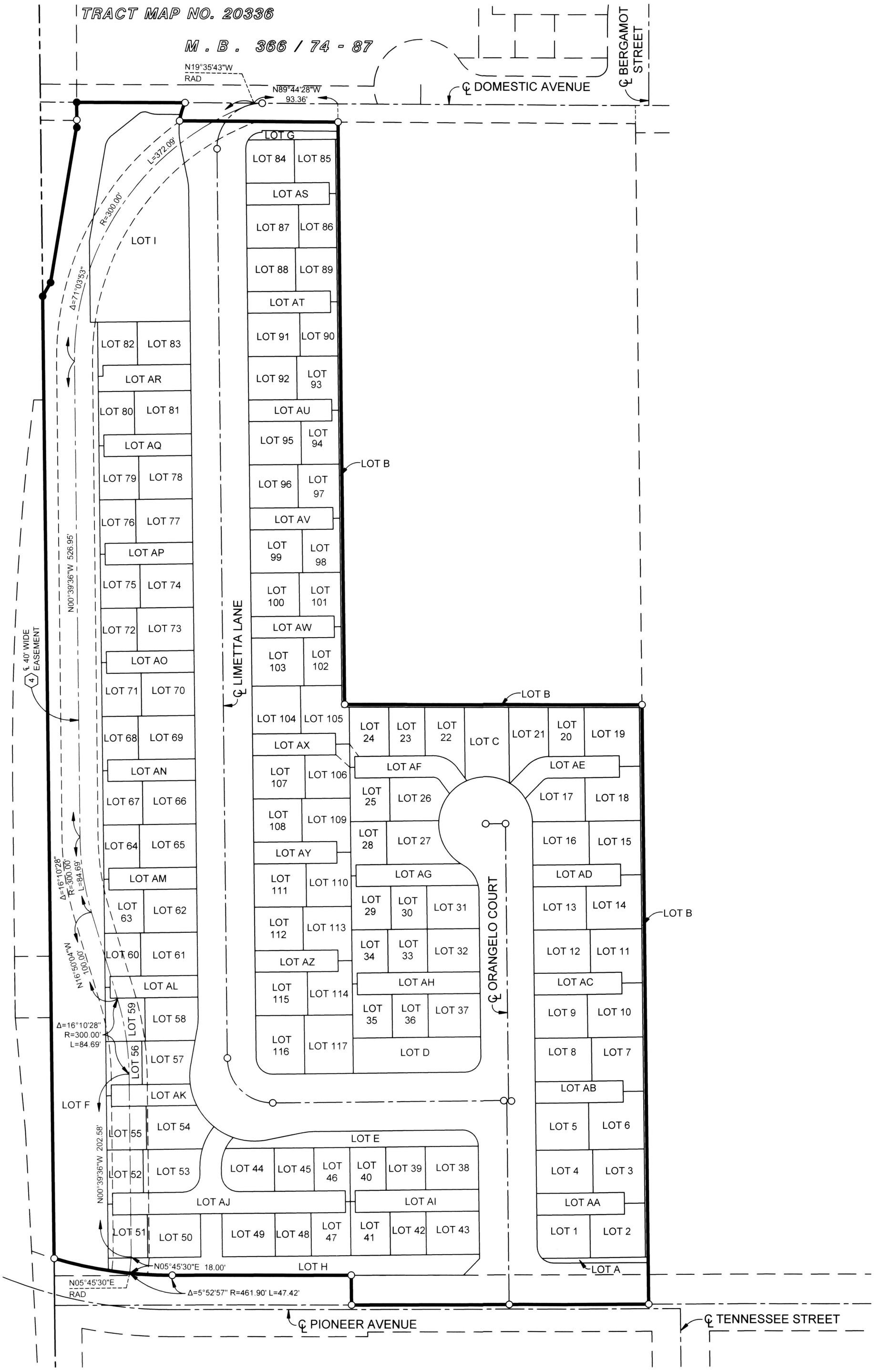

Electronically
Recorded in Official Records
San Bernardino County

Assessor-Recorder-County Clerk

DOC# 2025-0036413

02/19/2025 Titles: 1 Pages: 17
08:00 AM
SAN

| | | |
|---|---|---|
| | Fees | $0.00 |
| | Taxes | $0.00 |
| J7527 | CA SB2 Fee | $0.00 |
| | Total | $0.00 |


RECORDING REQUESTED BY:
MUNICIPAL UTILITIES AND
ENGINEERING DEPARTMENT
CITY OF REDLANDS

WHEN RECORDED RETURN TO:
CITY CLERK'S OFFICE
CITY OF REDLANDS
P.O. BOX 3005
REDLANDS, CA 92373

FEES NOT REQUIRED
PER GOVERNMENT CODE
SECTION 6103

(THIS SPACE FOR RECORDER'S USE ONLY)

# CITY OF REDLANDS
# SUBDIVISION IMPROVEMENT AGREEMENT

This Subdivision Improvement Agreement ("Agreement") is made this 18th day of March, 2025 ("Effective Date"), by and between the City of Redlands, a municipal corporation, hereinafter referred to as "City," and Meritage Homes of California, Inc., a California corporation, hereinafter referred to as "Subdivider." City and Subdivider are sometimes individually referred to herein as a "Party" and, together, as the "Parties."

## RECITALS

WHEREAS, Subdivider is the owner or authorized developer of property located in the City of Redlands known as Tract No. 20528 (the "Subdivision") for which Subdivider is obligated to construct certain improvements (the "Improvements") as a condition of approval of the Subdivision; and

WHEREAS, City desires to ensure that the Improvements will be constructed in a good and workmanlike manner and in accordance with City laws; and

WHEREAS, Subdivider acknowledges that it is familiar with the provisions of the Redlands Municipal Code and the State Subdivision Map Act (Government Code section 66410 et seq.) and agrees to comply therewith; and

WHEREAS, a final map for the Subdivision has been prepared pursuant to the Redlands Municipal Code and the State Subdivision Map Act, and has been filed by Subdivider for consideration by City;

NOW, THEREFORE, in consideration of the approval and acceptance by the City Council of City of the final map for the Subdivision, and the mutual promises contained herein, the Parties agree as follows:

AGREEMENT

1. Definition and Ownership of Improvements. The Improvements include but are not limited to the grading, paving, construction of curbs and gutters, storm drains and sanitary sewers, water lines, utilities, street lights and all appurtenant facilities associated with the Subdivision that are shown in the plans, profiles and specifications that have been prepared by Subdivider and approved by City, and which are described in Exhibit "A." All Improvements constructed or installed pursuant to this Agreement shall become the property of City, without payment therefor, upon acceptance of those Improvements by City.

2. Time for Completion. Construction of the Improvements shall be completed within twenty four (24) months from the Effective Date of this Agreement. In the event Subdivider fails to complete construction of the Improvements within that time period, City may require Subdivider's surety to complete the Improvements, or City may complete construction of the Improvements and recoup its expenses for such work from Subdivider, or Subdivider's surety, as hereafter provided.

3. Subdivider's Obligations to Construct Improvements. Subdivider shall:

A. Complete the Improvements, at Subdivider's expense, in conformance with approved Improvement plans; provided, however, that the Improvements shall not be deemed to be completed until accepted by City as provided in Section 18 hereof.

B. Furnish at Subdivider's expense the necessary materials, provisions and other supplies or equipment used for the Improvements, and a payment bond with respect to such work or labor as required by Civil Code Section 9550, for the completion of the Improvements in conformity with the Improvement plans.

C. Acquire and dedicate all rights-of-way, easements, and other interests in real property for construction and installation of the Improvements, or pay the cost of acquisition incurred by City. All rights-of-way, easements and other interests in real property shall be free and clear of liens and encumbrances. Subdivider's obligations with regard to acquisition by City of off-site rights-of-way, easements and other interests in real property shall be subject to a separate agreement between Subdivider and City. Subdivider shall also be responsible for obtaining any public or private sanitary sewer, drainage, and/or utility easements or authorization to accommodate the Subdivision.

D. Commence construction of the Improvements by the time established in Section 25 of this Agreement and complete the Improvements as required by Section 2, above, unless a time extension is granted in writing by City.

E. Install all Improvement monuments required by law prior to acceptance of the Improvements by City. Individual property monuments shall be installed within twenty four (24) months of such acceptance.

F. Install street name signs conforming to City standards. Permanent street name signs shall be installed before acceptance of the Improvements by City.

4. Acquisition and Dedication of Property. If any of the Improvements contemplated by this Agreement are to be constructed or installed on property not owned by City or Subdivider, no construction or installation shall be commenced before:

A. The offer of dedication to City of appropriate rights-of-way, easements or other interests in real property, and appropriate authorization from property owner to allow construction or installation of the Improvements, or

B. The dedication to, and acceptance by, City of appropriate rights-of-way easements or other interests in real property, as determined by the Municipal Utilities and Engineering Director, or

C. The issuance by a court of competent jurisdiction pursuant to the State Eminent Domain Law of an order of possession. Subdivider shall comply in all respects with the order of possession.

Nothing in this Section shall be construed as authorizing or granting an extension of time to Subdivider.

5. Security. Subdivider shall at all times guarantee Subdivider's performance by furnishing to City and maintaining good and sufficient security as required by the Subdivision laws in accordance with Sections 66499 through 66499.10 of the Government Code, on forms approved by City for the purposes and in the amounts as follows:

A. To assure faithful performance of the Agreement in regard to the Improvements in an amount of one hundred (100%) of the estimated cost of the Improvements; and

B. To secure payment to any contractor, subcontractor, person renting equipment, or furnishing labor and materials for the Improvements, a bond in the amount of fifty (50%) of the estimated cost of the Improvements; and

C. To guarantee or warranty the Improvements for a period of one (1) year following acceptance thereof by City against any defective work or labor done or defective materials furnished in the additional amount of ten (10%) of the estimate cost of the Improvements; and

D. Good and sufficient security in the amount of one hundred (100%) of the estimated cost of setting subdivision monuments.

E. Additional security as required by the applicable provisions of the Redlands Municipal Code.

The securities required by this Agreement shall be kept on file with the City Clerk. The terms of the security documents referenced in this Agreement are hereby incorporated into this Agreement. If any security is replaced by another approved security, the replacement shall: (1) comply with all the requirements for security in this Agreement, (2) be provided to the City Engineer to be filed with the City Clerk, and upon filing (3) be deemed to have been made a part of and incorporated into this Agreement. Upon provision of a replacement security with the City Engineer and filing of a

replacement security with the City Clerk, the former security may be released.

6. Alterations to Improvement Plans.

A. Any changes, alterations or additions to the Improvement plans, not exceeding ten (10%) of the original estimated cost of the Improvements, which are mutually agreed upon by City and Subdivider shall not relieve the Improvement security given for faithful performance of this Agreement. In the event such changes, alterations or additions exceed ten (10%) of the original estimated cost of the Improvements, Subdivider shall provide Improvement security for faithful performance as required by Section 5 of this Agreement for one hundred (100%) of the total estimated cost of the Improvement as changed, altered or amended, less any completed partial releases allowed by Section 8 of this Agreement.

B. Subdivider shall construct the Improvements in accordance with City standards in effect on the Effective Date of this Agreement. City reserves the right to modify the standards applicable to the Subdivision and this Agreement when necessary to protect the public safety or welfare or comply with applicable Federal or State law or City ordinances. If Subdivider requests and is granted an extension of time for completion of the Improvements, City may apply the standards in effect at the time of the extension.

7. Inspection. Subdivider shall at all times maintain proper facilities and safe access for inspection of the Improvements by City inspectors and to the shops wherein any work is in preparation. Upon completion of the Improvements, Subdivider may request a final inspection by the City Engineer or the City Engineer's authorized representative. If the City Engineer, or the City's designated representative, determines that the work has been completed in accordance with this Agreement, then the designated representative shall certify the completion of the Improvements to the Municipal Utilities and Engineering Director/City Engineer. No Improvements shall be accepted unless all aspects of work have been inspected and completed in accordance with the Improvement plans. When applicable law requires an inspection to be made by City at a particular stage of the work of constructing and installing such Improvements, City shall be given timely notice of Subdivider's readiness for such inspection and Subdivider shall not proceed with additional work until the inspection has been made and the work approved. Subdivider shall bear all costs of inspection and certification. No Improvements shall be deemed completed until written acceptance by City.

8. Release of Securities. The securities required by this Agreement shall be released as follows:

A. Security given for faithful performance of any act, obligation, work or agreement shall be released upon the final completion and acceptance of the act or work, subject to the provisions of subsection b. hereof.

B. City may release a portion of the security given for faithful performance of the Improvement work as the work progresses upon application therefor by Subdivider; provided, however, that no such release shall be for an amount less than twenty five (25%) of the total Improvement security given for faithful performance of the Improvement work and that the security shall not be reduced to an amount less than fifty percent (50%) of the total Improvement security

given for faithful performance until final completion and acceptance of the Improvements. In no event shall the City Engineer authorize a release of the Improvement security which would reduce the security to an amount below one hundred twenty five percent (125%) of that required to guarantee completion for the Improvement work and any other obligation imposed by this Agreement.

C. Security given to secure payment to any contractor, subcontractors and to persons furnishing labor, materials or equipment shall, at six (6) months after the completion and acceptance of the work, be reduced to an amount equal to no less than one hundred twenty five percent (125%) of the total claimed by all claimants for whom liens have been filed and of which notice has been given to City, plus an amount reasonably determined by City to be required to assure the performance of any other obligations secured by the security. The balance of the security shall be released upon the settlement of all claims and obligations for which the security was given.

D. No security given for the guarantee or warranty for work shall be released until the expiration of the warranty period and until any claims filed during the warranty period have been settled. As provided in Paragraph 12, the warranty period shall not commence until final acceptance of all the work and Improvements by City.

E. City may retain from any security released, an amount to sufficiently cover costs and reasonable expenses and fees, including reasonable attorneys' fees.

9. Injury to Improvements, Public Property or Public Utilities' Facilities.

A. Subdivider shall replace or repair, or have replaced or repaired, as the case may be, all public Improvements, public utility facilities and surveying or subdivision monuments which are destroyed or damaged as a result of any work under this Agreement. Subdivider shall bear the entire cost of replacement or repairs of any and all public or public utility property damaged or destroyed by reason of any work done under this Agreement, whether such property is owned by the United States or any agency thereof, or the State of California, or any agency or political subdivision thereof, or by City or any public or private utility corporation or by any combination of such owners. Any repair or replacement shall be to the satisfaction, and subject to the approval, of the City Engineer.

B. Furthermore, until such time as the Improvements are accepted by City, Subdivider shall be responsible for, and bear the risk of loss to, the Improvements. Until all Improvements required by this Agreement are fully completed and accepted by City, Subdivider shall be responsible for the care and maintenance of, and any damage to, such Improvements. City shall not, nor shall any officer or employee thereof, be liable to or responsible for any accident, loss or damage, regardless of cause, happening or occurring to the Improvements required by this Agreement prior to the completion and acceptance of the Improvements. All such risks shall be the responsibility of and are hereby assumed by Subdivider.

10. Permits. Subdivider shall, at Subdivider's expense, obtain all necessary permits and licenses for the construction and installation of the Improvements, and give all necessary notices and pay all fees and taxes required by law.

11. Default of Subdivider.

A. Default of Subdivider shall include, but not be limited to:

(1) Subdivider's failure to timely commence construction of the Improvements;
(2) Subdivider's failure to timely complete construction of the Improvements;
(3) Subdivider's failure to timely cure any defect in the Improvements;
(4) Subdivider's failure to perform substantial construction work for a period of twenty (20) calendar days after commencement of the work;
(5) Subdivider's insolvency, appointment of a receiver, or the filing of any petition in bankruptcy, either voluntary or involuntary, which Subdivider fails to discharge within thirty (30) days;
(6) The commencement of a foreclosure action against the subdivision or a portion thereof, or any conveyance in lieu or in avoidance of foreclosure; or
(7) Subdivider's failure to perform any other obligation under this Agreement.

B. City reserves to itself all remedies available to it at law or in equity for breach of Subdivider's obligations under this Agreement. City shall have the right, subject to this Section, to draw upon or utilize the appropriate security to mitigate City's damages in the event of default by Subdivider. The right of City to draw upon or utilize the security is additional to and not in lieu of any other remedy available to City. It is specifically recognized that the estimated costs and security amounts may not reflect the actual cost of construction or installation of the Improvements and, therefore, City's damages for Subdivider's default shall be measured by the cost of completing the required Improvements. The sums provided by the Improvements security may be used by City for the completion of the Improvements in accordance with the Improvement plans contained herein.

C. In the event of Subdivider's default under this Agreement, Subdivider authorizes City to perform such obligation twenty (20) days after mailing written notice of default to Subdivider and Subdivider's surety, and agrees to pay the entire cost of such performance by City. City may take over the work and prosecute the same to completion, by contract or by any other method City may deem advisable, for the account and at the expense of Subdivider, and Subdivider's surety shall be liable to City for any excess cost of damages occasioned City thereby. In such event, City, without liability for so doing, may take possession of, and utilize in completing the work, such materials, appliances, plants and other property belonging to Subdivider as may be on the site of the work and necessary for performance of the work.

D. Failure of Subdivider to comply with the terms of this Agreement shall constitute consent to the filing by City of a notice of violation against all the lots in the Subdivision, or to rescind the approval or otherwise revert the Subdivision to acreage. The remedy provided by this subsection is in addition to, and not in lieu of, other remedies available to City. Subdivider agrees that the choice of remedy or remedies for Subdivider's breach shall be in the discretion of City.

E. In the event that Subdivider fails to perform any obligation hereunder, Subdivider

agrees to pay all costs and expenses incurred by City in securing performance of such obligations, including but not limited to fees and charges of architects, engineers, attorneys and other professionals, and court costs.

F. The failure of City to take enforcement action with respect to a default, or to declare a breach, shall not be construed as a waiver of that default or breach or any subsequent default or breach of Subdivider.

12. Warranty. Subdivider shall guarantee or warrant the Improvements undertaken pursuant to this Agreement for a period of one (1) year after acceptance of the Subdivision by City against any defective work or labor done or defective materials furnished. If within the warranty period any work or Improvement, or part of any work or Improvement done, furnished, installed or constructed by Subdivider fails to fulfill any of the requirements of this Agreement or the Improvement plans or specifications referred to herein, Subdivider shall without delay and without cost to City repair or replace or reconstruct any defective or otherwise unsatisfactory part or parts of the work or structure. Should Subdivider fail to act promptly in accordance with this requirement, Subdivider hereby authorizes City, at City's option to perform the work twenty (20) days after mailing written notice of default to Subdivider and to Subdivider's surety, and agrees to pay the cost of such work by City. Should City determine that an urgency requires repairs or replacements to be made before Subdivider can be notified, City may, in its sole discretion, make the necessary repairs or replacement or perform the necessary work, and Subdivider shall pay to City the cost of such repairs.

13. Subdivider Not Agent or Employee of City. Neither Subdivider nor Subdivider's agents, contractors or subcontractors are or shall be considered to be agents or employees of City in connection with the performance of Subdivider's obligations under this Agreement.

14. Environmental Warranty. Prior to the acceptance of any property dedications or Improvements by City, Subdivider shall certify and warrant that neither the property to be dedicated nor Subdivider are in violation of any environmental law and neither the property to be dedicated nor the Subdivider are subject to any existing, pending, or threatened investigation by any federal, state or local governmental authority under or in connection with environmental law. Neither Subdivider nor any third party will use, generate, manufacture, produce, or release, on, under, or about the property to be dedicated, any hazardous substance except in compliance with all applicable environmental laws. Subdivider has not caused or permitted the release of, and has no knowledge of the release or presence of, any hazardous substance on the property to be dedicated or the migration of any hazardous substance from or to any other property adjacent to, or in the vicinity of, the property to be dedicated. Subdivider's prior and present use of the property to be dedicated has not resulted in the release of any hazardous substance on the property to be dedicated. Subdivider shall give prompt written notice to City at the address set forth herein of:

A. Any proceeding or investigation by any federal, state or local governmental authority with respect to the presence of any hazardous substance on the property to be dedicated or the migration thereof from or to any other property adjacent to, or in the vicinity of, the property to be dedicated;

B. Any claims made or threatened by any third party against City or the property to be dedicated relating to any loss or injury resulting from any hazardous substance; and

C. Subdivider's discovery of any occurrence or condition on any property adjoining in the vicinity of the property to be dedicated that could cause the property to be dedicated or any part thereof to be subject to any restrictions on its ownership, occupancy, use for the purpose for which it is intended, transferability or suit under any environmental law.

15. Other Agreements. Nothing contained in this Agreement shall preclude City from expending monies pursuant to agreements concurrently or previously executed between the Parties, or from entering into agreements with other subdividers for the apportionment of costs of the Improvements pursuant to the provisions of the City ordinances providing therefor, nor shall anything in this Agreement commit City to any such apportionment.

16. Subdivider's Obligation to Warn Public during Construction. Until final acceptance of the Improvements by City, Subdivider shall give good and adequate warning to the public of each and every dangerous condition extant in connection with said Improvements, and will take reasonable actions to protect the public from such dangerous conditions.

17. Vesting of Ownership. Upon formal final acceptance of the Improvements by City and recordation of the final map for the Subdivision, ownership of the Improvements constructed pursuant to this Agreement shall vest in City.

18. Final Acceptance of Work. Acceptance of work on behalf of City shall be made by the Municipal Utilities and Engineering Director after final completion and inspection of all Improvements. Such acceptance shall not constitute a waiver of defects by City.

19. Compliance with Laws. Subdivider and its agents, employees, contractors and subcontractors shall comply with all applicable Federal, State and local rules, laws and regulations in constructing the Improvements including, but not limited to, all applicable Labor Code laws.

20. Insurance.

A. City, and its elected and appointed officials, officers, employees, and volunteers shall be covered as additional insureds on the Commercial General Liability ("CGL") policy with respect to liability arising out of work or operations performed by, or on behalf of, Subdivider including materials, parts, or equipment furnished in connection with such work or operations and automobiles owned, leased, hired, or borrowed by or on behalf of Subdivider. General liability coverage can be provided in the form of an endorsement to Subdivider's insurance (at least as broad as Insurance Services Office ("ISO") Form CG 20 10, CG 11 85 or both CG 20 10, CG 20 26, CG 20 33, or CG 20 38; and CG 20 37 forms if later revisions used).

For any claims related to this project, Subdivider's insurance coverage shall be primary insurance coverage at least as broad as ISO CG 20 01 04 13 as respects City, and its elected and appointed officials, officers, employees, and volunteers. Any insurance or self-insurance maintained

by City, and its elected and appointed officials, officers, employees, or volunteers shall be excess of Subdivider's insurance and shall not contribute with it.

Each insurance policy required by this section 20 shall provide that coverage shall not be canceled, except with prior twenty (20) days written notice to City.

B. Builder's Risk (Course of Construction) Insurance. Subdivider may submit evidence of Builder's Risk insurance in the form of Course of Construction coverage. Such coverage shall name City as a loss payee as their interest may appear.

If the project does not involve new or major reconstruction, at the option of City, an Installation Floater may be acceptable. For such projects, a Property Installation Floater shall be obtained that provides for the improvement, remodel, modification, alteration, conversion or adjustment to existing buildings, structures, processes, machinery and equipment. The Property Installation Floater shall provide property damage coverage for any building, structure, machinery or equipment damaged, impaired, broken, or destroyed during the performance of the Work, including during transit, installation, and testing.

C. Acceptability of Insurers. Insurance is to be placed with insurers authorized to conduct business in the state with a current A.M. Best rating of no less than A: VII, unless otherwise acceptable to City.

D. Waiver of Subrogation. Subdivider hereby agrees to waive rights of subrogation which any insurer of Subdivider may acquire from Subdivider by virtue of the payment of any loss. Subdivider agrees to obtain any endorsement that may be necessary to affect this waiver of subrogation. The Workers' Compensation policy shall be endorsed with a waiver of subrogation in favor of City for all work performed by Subdivider, its employees, agents, and subcontractors.

E. Verification of Coverage. Subdivider shall furnish City with original Certificates of Insurance including all required amendatory endorsements (or copies of the applicable policy language effecting coverage required by this clause) and a copy of the Declarations and Endorsement Page of the CGL policy listing all policy endorsements to City before Work begins. However, failure to obtain the required documents prior to the work beginning shall not waive Subdivider's obligation to provide them. City reserves the right to require complete, certified copies of all required insurance policies, including endorsements, required by these specifications, at any time.

F. Subcontractors. Subdivider shall require and verify that all subcontractors maintain insurance meeting all requirements stated herein, and Subdivider shall ensure that City is an additional insured on insurance required from subcontractors. For CGL coverage, subcontractors shall provide coverage with a form at least as broad as CG 20 38 04 13.

G. Subdivider's Insurance to be Primary

All insurance required by this Agreement is to be maintained by Subdivider for the duration of this Agreement and shall be primary with respect to City and non-contributing to any insurance or self-insurance maintained by City. Subdivider shall provide City with Certificates of Insurance evidencing such insurance concurrent with Subdivider's execution and delivery of this

Agreement to City, for City's approval.

H. Worker's Compensation and Employer's Liability. Subdivider shall have Worker's Compensation and Employer's Liability insurance in an amount which meets the statutory requirement with an insurance carrier acceptable to City Subdivider shall execute and provide City with Exhibit "B" titled "Workers' Compensation Insurance Certification," which is attached hereto and incorporated herein by this reference.

I. Comprehensive General Liability Insurance. Subdivider shall secure comprehensive general liability insurance covering all work under this Agreement, including work done by subcontractors, with carriers acceptable to City. Minimum coverage of one million dollars ($1,000,000) per occurrence and two million dollars ($2,000,000) aggregate for public liability, property damage and personal injury is required. City shall be named as an additional insured and the insurance policy shall include a provision prohibiting modification of the coverage limits or cancellation of said policy except upon thirty (30) days prior written notice to City.

J. Business Auto Liability Insurance. Subdivider shall secure business auto liability coverage, with minimum limits of one million dollars ($1,000,000) per occurrence, combined single limit for bodily injury liability and property damage liability. This coverage shall include all Subdivider owned vehicles used on the project, hired and non-owned vehicles, and employee non-ownership vehicles. City shall be named as an additional insured and the insurance policy shall include a provision prohibiting modification of the coverage limits or cancellation of said policy except upon thirty (30) days prior written notice to City.

21. Indemnity/Hold Harmless.

A. City and any official or employee thereof shall not be liable for any injury to persons or property occasioned by reasons of the acts or omissions of Subdivider, its agents, employees, contractors and subcontractors in the performance of this Agreement. Subdivider further agrees to protect, defend, indemnify and hold harmless City, and its officials and employees from any act or omission by Subdivider or its employees or agents, in connection with the work performed pursuant to this Agreement except for all claims, losses, damages, causes of action, injuries and/or liabilities to City and/or third parties caused by the negligence of City or City's agents. This indemnification and Agreement to hold harmless shall extend to injuries to persons and damages or taking of property resulting from the design or construction of the Subdivision, and the public Improvements as provided herein.

B. After acceptance of the Improvements, Subdivider shall remain obligated to eliminate any defect in design or dangerous condition caused by the design or construction defect; however, Subdivider shall not be responsible for routine maintenance. The provisions of this paragraph shall remain in full force and effect for ten (10) years following the acceptance by City of the Improvements. It is the intent of this section that Subdivider shall be responsible for all liability for design and construction of the Improvements installed or work done pursuant to this Agreement and that City shall not be liable for any negligence, nonfeasance, misfeasance or malfeasance in approving, reviewing, checking, or inspecting any work or construction. The Improvement security shall not be required to cover the provisions of this paragraph.

C. Subdivider shall reimburse City for all attorney's fees, costs and expenses (including but not limited to fees and charges of architects, engineers, attorneys and other professionals, and court costs) incurred by City in enforcing the provisions of this section.

D. In the event City tenders defense and indemnification pursuant to the provision set forth in subsection (a) above, and Subdivider wrongfully delays acceptance of the tender of the indemnification beyond the date specified in the tender of defense and indemnification demand, and based on City's costs necessitated by having to undertake its own defense and utilize the services of its own employees in the defense of any such claim, Subdivider shall be charged two hundred fifty ($250) dollars per day from the date tender should have been accepted until the date tender is finally accepted to reimburse City for all of its defense related expenses, including the value of all time required by City employees to defend City during the time that tender should have been but was not accepted.

22. Personal Nature of Subdivider's Obligations. All of Subdivider's obligations under this Agreement are and shall remain the personal obligations of Subdivider notwithstanding a transfer of all or any part of the property within the Subdivision subject to this Agreement, and Subdivider shall not be entitled to assign its obligations under this Agreement to any transferee of all or any part of the property within the Subdivision or any other third party without the express written consent of City.

23. Sale or Disposition of Subdivision. Subdivider may request a novation of this Agreement and a substitution of security. Upon approval of the novation and substitution of securities, Subdivider may request a release or reduction of the securities required by this Agreement. Nothing in the novation shall relieve Subdivider of the obligations under Section 22 for the work or Improvements done by Subdivider.

24. Time is of the Essence. Time is of the essence in the performance of this Agreement.

25. Time for Commencement of Work; Time Extensions. Subdivider shall commence substantial construction of the Improvements required by this Agreement not later than three (3) months after the Effective Date of this Agreement. In the event good cause exists as determined by the Municipal Utilities and Engineering Director, the time for commencement of construction or completion of the Improvements hereunder may be extended for a period or periods not exceeding a total of two (2) additional years. The extension shall be executed in writing by the Municipal Utilities and Engineering Director. Any such extension may be granted without notice to Subdivider's surety and shall not affect the validity of this Agreement or release the surety or sureties on any security given for this Agreement. The Municipal Utilities and Engineering Director shall be the sole and final judge as to whether or not good cause has been shown to entitle Subdivider to an extension. Delay, other than delay in the commencement of work, resulting from an act of City, act of God, by storm or inclement weather, strikes, boycotts or similar political actions which prevent the conducting of work, which Subdivider could not have reasonably foreseen, and furthermore were not caused by or contributed to by Subdivider, shall constitute good cause for and extension of the time for completion. As a condition of such extension, the Municipal Utilities and Engineering Director may require Subdivider to furnish new security guaranteeing performance of this Agreement, as extended, in an increased amount

to compensate for any increase in construction costs as determined by the Municipal Utilities and Engineering Director.

26. Certificate of Satisfaction. The City Manager may, upon the determination of the Development Services Director that Subdivider has fully satisfied the obligations secured by this Agreement, at the request of Subdivider, execute and record a Certificate of Satisfaction in the official records of the County of San Bernardino evidencing Subdivider's compliance with, and satisfaction of, all obligations under this Agreement. Subdivider shall be responsible for the payment of all City costs associated with the preparation and recordation of such a certificate.

27. No Vesting of Rights. Performance by Subdivider of this agreement shall not be construed to vest Subdivider's rights with respect to any change in any zoning or building law or ordinance.

28. Notices. Notice or other communication required, or which may be given, pursuant to this Agreement, shall be in writing. Any such notice shall be deemed delivered (i) on the date of delivery in person; (ii) five (5) days after deposit in first class registered mail, with return receipt requested; (iii) on the actual delivery date if deposited with an overnight courier; or (iv) on the date sent by facsimile or electronic mail transmission (including PDF), if confirmed with a copy sent contemporaneously by first class, certified, registered or express mail; in each case properly posted and fully prepaid to the appropriate address set forth below, or such other address as a Party may provide notice in accordance with this section:

Notice to City: Municipal Utilities and Engineering Department Director
City of Redlands
PO Box 3005
Redlands, CA 92373

Notice to Subdivider: Nick Emsiek, Division President
Meritage Homes
5 Peters Canyon Road, Suite 310
Irvine, CA 92606

Notice to Legal Council: Mel Faraoni – Vice President / Associate General Counsel
Meritage Homes
18655 North Claret Drive, Suite 400
Scottsdale, AZ 85255

Such addresses may be changed by notice to the other Party given in the same manner as provided above.

29. Severability. The provisions of this Agreement are severable. If any portion of this Agreement is held invalid by a court of competent jurisdiction, the remainder of the Agreement shall remain in full force and effect unless amended or modified by mutual written consent of the Parties.

30. Captions. The captions of this Agreement are for convenience and reference only and shall not define, explain, modify, limit, exemplify, or aid in the interpretation, construction or meaning of any provisions of this Agreement.

31. Litigation. In the event that suit is brought to enforce the terms of this Agreement, the prevailing party shall be entitled to litigation costs and reasonable attorneys' fees, including fees for use of in-house counsel by a Party.

32. Incorporation of Recitals. The recitals to this Agreement are hereby incorporated into the terms of this Agreement.

33. Entire Agreement. This Agreement constitutes the entire agreement of the Parties with respect to its subject matter. All modifications, amendments, or waivers of the terms of this Agreement must be in writing and signed by the appropriate representatives of the Parties.

34. Interpretation. This Agreement shall be interpreted in accordance with the laws of the State of California.

35. Jurisdiction. Jurisdiction of all disputes over the terms of this Agreement shall be in the county of San Bernardino, State of California.

IN WITNESS WHEREOF this Agreement is executed by the Parties as of the date herein above first written.

SUBDIVIDER
Meritage Homes of California, Inc.,
a California Corporation

By:_____
Nick Emsiek, Division President

CITY OF REDLANDS

By:_____
Charles M. Duggan, Jr., City Manager

ATTEST:

_____
Jeanne Donaldson, City Clerk

(Notary attachment and proof of authorization
for all signatures required and must be attached)

**CALIFORNIA ACKNOWLEDGEMENT** **CIVIL CODE § 1189**

A notary public or other officer completing this certificate verifies only the identity of the individual who signed the document to which this certificate is attached, and not the truthfulness, accuracy, or validity of that document.

State of California
County of San Bernardino

On Tuesday, February 18, 2025 before me, Jennifer Macias, Notary Public, personally appeared Charles M. Duggan, Jr., and Jeanne Donaldson, who proved to me on the basis of satisfactory evidence to be the persons whose names are subscribed to the within instrument and acknowledged to me that they executed the same in their authorized capacity, and that by their signatures on the instrument the persons, or the entity upon behalf of which the persons acted, executed the instrument.

I certify under PENALTY OF PERJURY under the laws of the State of California that the foregoing paragraph is true and correct.

WITNESS my hand and official seal.

Signature _____
Signature of Notary Public

JENNIFER MACIAS
Notary Public - California
San Bernardino County
Commission # 2388813
My Comm. Expires Dec 31, 2025

(Seal)

Copyright © 2018 NotaryAcknowledgement.com. All Rights Reserved.

**CALIFORNIA ACKNOWLEDGMENT** **CIVIL CODE § 1189**

A notary public or other officer completing this certificate verifies only the identity of the individual who signed the document to which this certificate is attached, and not the truthfulness, accuracy, or validity of that document.

State of California
County of Orange

On January 27, 2025 before me, Andrew Salazar, Notary Public,
*Date* *Here Insert Name and Title of the Officer*

personally appeared Nick Emsiek
*Name(s) of Signer(s)*

who proved to me on the basis of satisfactory evidence to be the person~~(s)~~ whose name~~(s)~~ is~~are~~ subscribed to the within instrument and acknowledged to me that he~~/she/they~~ executed the same in his~~/her/their~~ authorized capacity~~(ies)~~, and that by his~~/her/their~~ signature~~(s)~~ on the instrument the person~~(s)~~, or the entity upon behalf of which the person~~(s)~~ acted, executed the instrument.

ANDREW SALAZAR
Notary Public - California
Orange County
Commission # 2365034
My Comm. Expires Jul 10, 2025

*Place Notary Seal and/or Stamp Above*

I certify under PENALTY OF PERJURY under the laws of the State of California that the foregoing paragraph is true and correct.

WITNESS my hand and official seal.

Signature _____
*Signature of Notary Public*

**OPTIONAL**

*Completing this information can deter alteration of the document or fraudulent reattachment of this form to an unintended document.*

**Description of Attached Document**

Title or Type of Document: _____

Document Date: _____ Number of Pages: _____

Signer(s) Other Than Named Above: _____

**Capacity(ies) Claimed by Signer(s)**

| | |
|---|---|
| Signer's Name: _____ | Signer's Name: _____ |
| ☐ Corporate Officer – Title(s): _____ | ☐ Corporate Officer – Title(s): _____ |
| ☐ Partner – ☐ Limited ☐ General | ☐ Partner – ☐ Limited ☐ General |
| ☐ Individual ☐ Attorney in Fact | ☐ Individual ☐ Attorney in Fact |
| ☐ Trustee ☐ Guardian or Conservator | ☐ Trustee ☐ Guardian or Conservator |
| ☐ Other: _____ | ☐ Other: _____ |
| Signer is Representing: _____ | Signer is Representing: _____ |

©2019 National Notary Association

EXHIBIT "A"

CITY OF REDLANDS
SUBDIVISION IMPROVEMENT AGREEMENT

TRACT MAP NO. 20528

The following plans are in the office of the Municipal Utilities and Engineering Department (MUED);

| Description | Drawing No. | No. of Sheets |
|---|---|---|
| Street Improvement Plans | 2443-ST | 14 |
| Storm Drain Plans | 2443-SD | 10 |
| Street Striping and Signage Plans | 2443-TS | 03 |
| Street Light Plans | 2443-SL | 03 |
| CFD Street Tree Plans | 2443-TP | 06 |
| Water Improvement Plans | D-60758 | 04 |
| Recycled Water Improvement Plans | NP-0011 | 06 |
| Sewer Improvement Plans | F-1874 | 05 |

IA-4.2 (11/24)

EXHIBIT "B"

WORKERS' COMPENSATION INSURANCE CERTIFICATION

Every employer, except the State, shall secure the payment of compensation in one or more of the following ways:

(a) By being insured against liability to pay compensation by one or more insurers duly authorized to write compensation insurance in this State.

(b) By securing from the Director of Industrial Relations, a certificate of consent to self-insure, either as an individual employer, or as one employer in a group of employers, which may be given upon furnishing proof satisfactory to the Director of Industrial Relations of ability to self-insure and to pay any compensation that may become due to his or her employees.

CHECK ONE

_X_I am aware of the provisions of Section 3700 of the Labor Code which requires every employer to be insured against liability for Workers' Compensation or to undertake self- insurance in accordance with the provisions of that Code, and I will comply with such provisions before commencing the performance of the work and activities required or permitted under this Agreement. (Labor Code §1861).

_____I affirm that at all times, in performing the work and activities required or permitted under this Agreement, I shall not employ any person in any manner such that I become subject to the workers' compensation laws of California. However, at any time, if I employ any person such that I become subject to the workers' compensation laws of California, immediately I shall provide the City with a certificate of consent to self-insure, or a certification of workers' compensation insurance.

I certify under penalty of perjury under the laws of the State of California that the information and representations made in this certificate are true and correct.

Meritage Homes of California, Inc., A California Corporation

By:_____ Date: 1/27/25
Nick Emsiek, Division President

# FAITHFUL PERFORMANCE BOND

Whereas, the City of Redlands ("City"), State of California, and Meritage Homes of California, (hereinafter designated as "Principal") have entered into an agreement dated March 18, 2025 ("Agreement), which is hereby referred to and made a part hereof whereby Principal agrees to install and complete certain designated public improvements (the "Work") for Tract No. 20528; and

Whereas, under the terms of the Agreement, Principal is required before commencing the performance of the Work, to furnish a good and sufficient Faithful Performance bond with the City for the faithful performance of the Agreement;

Now, therefore, we, Principal and the undersigned, as corporate Surety, are held and firmly bound unto the City in the penal sum of five million twenty thousand two hundred ninety nine dollars ($5,020,299) lawful money of the United States, for the payment of which sum we bind ourselves, and our heirs, successors, executors and administrators, jointly and severally, firmly by these presents.

The condition of this obligation is such that if the above bounded Principal, his or its heirs, executors, administrators, successors or assigns, shall in all things stand to and abide by, and well and truly keep and perform the covenants, conditions and provisions in the Agreement and any alteration thereof made as therein provided, on his or its part, to be kept and performed at the time and in the manner therein specified, and in all respects according to their true intent and meaning, and shall faithfully fulfill the one-year guarantee of all materials and workmanship, and shall defend, indemnify and save harmless the City and its elected officials, officers, agents and employees, as therein stipulated, then this obligation shall become null and void; otherwise it shall be and remain in full force and effect.

As a part of the obligation secured hereby and in addition to the face amount specified therefor, there shall be included costs and reasonable expenses and fees, including reasonable attorneys' fees, incurred by the City in successfully enforcing such obligations, all to be taxed as costs and included in the judgment rendered.

As a condition precedent to the satisfactory completion of the Agreement, the above obligation shall hold good for a period of one (1) year or longer if required by the Agreement after the acceptance of the Work by the City, during which time if Principal shall fail to make full, complete, and satisfactory repair and replacements and totally protect the City from loss or damage made evident during this period from the date of completion of the Work, and resulting from or caused by defective materials or faulty workmanship, the above obligation in penal sum thereof shall remain in full force and effect. The obligations of Surety hereunder shall continue so long as any obligation of Principal remains.

Whenever Principal shall be, and is declared by the City to be, in default under the Agreement, the City having performed the City obligations thereunder, the Surety shall promptly remedy the default, or shall promptly, at the City's option:

1. Complete the Agreement in accordance with its terms and conditions; or

2. Obtain a bid or bids for completing the Agreement in accordance with its terms and conditions, and upon determination by Surety of the lowest responsive and responsible bidder, arrange for a contract between such bidder and the City, and make available as work progresses sufficient funds to pay the cost of completion of the Work less the balance of the Agreement price, but not exceeding, including other costs and damages for which Surety may be liable hereunder, the amount set forth above. The term "balance of the Agreement price," as used in this paragraph, shall mean the total amount payable to Principal by the City under the Agreement and any modifications thereto, less the amount previously properly paid by the City to Principal.

Surety expressly agrees that the City may reject any contractor or subcontractor which may be proposed by Surety in fulfillment of its obligations in the event of default by Principal.

Surety shall not utilize Principal in completing the Work nor shall Surety accept a bid from Principal for completion of the Work if the City, when declaring Principal in default, notifies Surety of the City's objection to Principal's further participation in the completion of the Work.

No right of action shall accrue on the bond to or for the use of any person or corporation other than the City named herein or the successors or assigns of the City. Any suit under this bond must be instituted within the applicable statute of limitations period.

Surety, for value received, hereby stipulates and agrees that no change, extension of time, alteration or addition to the terms of the Agreement or to the Work to be performed thereunder or the specifications accompanying the same shall in any way affect its obligations on this bond, and it does hereby waive notice of any such change, extension of time, alteration or addition to the terms of the Agreement or to the Work or to the specifications.

No final settlement between the City and Principal shall abridge the right of any beneficiary hereunder whose claim may be unsatisfied.

Principal and Surety agree that if the City is required to engage the services of any attorney in connection with the enforcement of this bond, each shall pay the City's reasonable attorneys' fees incurred, with or without suit, in addition to the above sum.

In witness whereof, this instrument has been duly executed by Principal and Surety above named, on January 17, 2025.

(SEAL)
Meritage Homes of California, Inc.,
California Corporation
(Principal)

(Signature) Hilla Sferruzza
EVP-CFO

(Seal and Notarial Acknowledgment of Surety)

(SEAL)
Liberty Mutual Insurance Company
(Surety)

BY: Krista M. Lee
(Signature)
Krista M. Lee, Attorney-In-Fact
Address: 175 Berkeley Street
Boston, MA 02116

Telephone (617 ) 357-9500

# ALL-PURPOSE ACKNOWLEDGEMENT

A notary public or other officer completing this certificate verifies only the identity of the individual who signed the document to which this certificate is attached, and not the truthfulness, accuracy, or validity of that document.

STATE OF ARIZONA )SS
COUNTY OF MARICOPA )

On January 22, 2025 before me, Julie Clark, Notary Public, personally appeared Hilla Sferruzza, EVP & CFO

who proved to me on the basis of satisfactory evidence to be the person(s) whose name(s) is/are subscribed to the within instrument and acknowledged to me that he/she/they executed the same in his/her/their authorized capacity(ies), and that by his/her/their signature(s) on the instrument the person(s), or the entity upon behalf of which the person(s) acted, executed the instrument.

I certify under PENALTY OF PERJURY under the laws of the State of Arizona that the foregoing paragraph is true and correct.

WITNESS my hand and official seal.

Signature Julie Clark

JULIE CLARK
NOTARY PUBLIC - ARIZONA
MARICOPA COUNTY
COMMISSION # 677679
MY COMMISSION EXPIRES
NOVEMBER 29, 2028

This area for official notarial seal.

## OPTIONAL SECTION - NOT PART OF NOTARY ACKNOWLEDGEMENT
## CAPACITY CLAIMED BY SIGNER

Though statute does not require the Notary to fill in the data below, doing so may prove invaluable to persons relying on the documents.

- ☐ INDIVIDUAL
- ☐ CORPORATE OFFICER(S) TITLE(S)
- ☐ PARTNER(S) ☐ LIMITED ☐ GENERAL
- ☐ ATTORNEY-IN-FACT
- ☐ TRUSTEE(S)
- ☐ GUARDIAN/CONSERVATOR
- ☐ OTHER

SIGNER IS REPRESENTING:

**Name of Person or Entity** Name of Person or Entity

## OPTIONAL SECTION - NOT PART OF NOTARY ACKNOWLEDGEMENT

Though the data requested here is not required by law, it could prevent fraudulent reattachment of this form.

**THIS CERTIFICATE MUST BE ATTACHED TO THE DOCUMENT DESCRIBED BELOW**

TITLE OR TYPE OF DOCUMENT: _____

NUMBER OF PAGES _____ DATE OF DOCUMENT _____

SIGNER(S) OTHER THAN NAMED ABOVE _____

Reproduced by First American Title Company 11/2007

# CALIFORNIA ALL- PURPOSE CERTIFICATE OF ACKNOWLEDGMENT

A notary public or other officer completing this certificate verifies only the identity of the individual who signed the document to which this certificate is attached, and not the truthfulness, accuracy, or validity of that document.

State of Washington }

County of King }

On January 17, 2025 before me, Tevy Lor, Notary Public,
(Here insert name and title of the officer)

personally appeared Krista M. Lee,
who proved to me on the basis of satisfactory evidence to be the person(s) whose name(s) is/are subscribed to the within instrument and acknowledged to me that he/she/they executed the same in his/her/their authorized capacity(ies), and that by his/her/their signature(s) on the instrument the person(s), or the entity upon behalf of which the person(s) acted, executed the instrument.

I certify under PENALTY OF PERJURY under the laws of the State of California that the foregoing paragraph is true and correct.

WITNESS my hand and official seal.

TEVY LOR
NOTARY PUBLIC
STATE OF WASHINGTON
License Number 28891
My Commission Expires 07/28/2028

Notary Public Signature (Notary Public Seal)
My Commission Expires: 07/28/2028

## ADDITIONAL OPTIONAL INFORMATION

DESCRIPTION OF THE ATTACHED DOCUMENT

_____
(Title or description of attached document)

_____
(Title or description of attached document continued)

Number of Pages _____ Document Date_____

CAPACITY CLAIMED BY THE SIGNER

- ☐ Individual (s)
- ☐ Corporate Officer
  _____
  (Title)
- ☐ Partner(s)
- ☐ Attorney-in-Fact
- ☐ Trustee(s)
- ☐ Other _____

## INSTRUCTIONS FOR COMPLETING THIS FORM

*This form complies with current California statutes regarding notary wording and, if needed, should be completed and attached to the document. Acknowledgments from other states may be completed for documents being sent to that state so long as the wording does not require the California notary to violate California notary law.*

- State and County information must be the State and County where the document signer(s) personally appeared before the notary public for acknowledgment.
- Date of notarization must be the date that the signer(s) personally appeared which must also be the same date the acknowledgment is completed.
- The notary public must print his or her name as it appears within his or her commission followed by a comma and then your title (notary public).
- Print the name(s) of document signer(s) who personally appear at the time of notarization.
- Indicate the correct singular or plural forms by crossing off incorrect forms (i.e. ~~he~~/she/~~they,~~ is /~~are~~ ) or circling the correct forms. Failure to correctly indicate this information may lead to rejection of document recording.
- The notary seal impression must be clear and photographically reproducible. Impression must not cover text or lines. If seal impression smudges, re-seal if a sufficient area permits, otherwise complete a different acknowledgment form.
- Signature of the notary public must match the signature on file with the office of the county clerk.
  - Additional information is not required but could help to ensure this acknowledgment is not misused or attached to a different document.
  - Indicate title or type of attached document, number of pages and date.
  - Indicate the capacity claimed by the signer. If the claimed capacity is a corporate officer, indicate the title (i.e. CEO, CFO, Secretary).
- Securely attach this document to the signed document with a staple.

Liberty Mutual. SURETY

# POWER OF ATTORNEY

Certificate No: 8204866

Liberty Mutual Insurance Company
The Ohio Casualty Insurance Company
West American Insurance Company

**KNOWN ALL PERSONS BY THESE PRESENTS:** That The Ohio Casualty Insurance Company is a corporation duly organized under the laws of the State of New Hampshire, that Liberty Mutual Insurance Company is a corporation duly organized under the laws of the State of Massachusetts, and West American Insurance Company is a corporation duly organized under the laws of the State of Indiana (herein collectively called the "Companies"), pursuant to and by authority herein set forth, does hereby name, constitute and appoint, Krista M. Lee all of the city of Seattle, state of Washington each individually if there be more than one named, its true and lawful attorney-in-fact to make, execute, seal, acknowledge and deliver, for and on its behalf as surety and as its act and deed, any and all undertakings, bonds, recognizances and other surety obligations, in pursuance of these presents and shall be as binding upon the Companies as if they have been duly signed by the president and attested by the secretary of the Companies in their own proper persons.

**IN WITNESS WHEREOF,** this Power of Attorney has been subscribed by an authorized officer or official of the Companies and the corporate seals of the Companies have been affixed thereto this 1st day of July, 2024.

LIBERTY MUTUAL INSURANCE COMPANY INCORPORATED 1912 MASSACHUSETTS — THE OHIO CASUALTY INSURANCE COMPANY INCORPORATED 1919 NEW HAMPSHIRE — WEST AMERICAN INSURANCE COMPANY INCORPORATED 1991 INDIANA

Liberty Mutual Insurance Company
The Ohio Casualty Insurance Company
West American Insurance Company

By: _____
Nathan J. Zangerle, Assistant Secretary

STATE OF PENNSYLVANIA ss
COUNTY OF MONTGOMERY

On this 1st day of July, 2024, before me personally appeared Nathan J. Zangerle, who acknowledged himself to be the Assistant Secretary of Liberty Mutual Insurance Company, The Ohio Casualty Company, and West American Insurance Company, and that he, as such, being authorized so to do, execute the foregoing instrument for the purposes therein contained by signing on behalf of the corporations by himself as a duly authorized officer.

**IN WITNESS WHEREOF,** I have hereunto subscribed my name and affixed my notarial seal at Plymouth Meeting, Pennsylvania, on the day and year first above written.

TERESA PASTELLA COMMONWEALTH OF PENNSYLVANIA NOTARY PUBLIC

Commonwealth of Pennsylvania - Notary Seal
Teresa Pastella, Notary Public
Montgomery County
My commission expires March 28, 2025
Commission number 1126044
Member, Pennsylvania Association of Notaries

By: _____
Teresa Pastella, Notary Public

This Power of Attorney is made and executed pursuant to and by authority of the following By-laws and Authorizations of The Ohio Casualty Insurance Company, Liberty Mutual Insurance Company, and West American Insurance Company which resolutions are now in full force and effect reading as follows:

**ARTICLE IV – OFFICERS:** Section 12. Power of Attorney.
Any officer or other official of the Corporation authorized for that purpose in writing by the Chairman or the President, and subject to such limitation as the Chairman or the President may prescribe, shall appoint such attorneys-in-fact, as may be necessary to act in behalf of the Corporation to make, execute, seal, acknowledge and deliver as surety any and all undertakings, bonds, recognizances and other surety obligations. Such attorneys-in-fact, subject to the limitations set forth in their respective powers of attorney, shall have full power to bind the Corporation by their signature and execution of any such instruments and to attach thereto the seal of the Corporation. When so executed, such instruments shall be as binding as if signed by the President and attested to by the Secretary. Any power or authority granted to any representative or attorney-in-fact under the provisions of this article may be revoked at any time by the Board, the Chairman, the President or by the officer or officers granting such power or authority.

**ARTICLE XIII - Execution of Contracts:** Section 5. Surety Bonds and Undertakings.
Any officer of the Company authorized for that purpose in writing by the chairman or the president, and subject to such limitations as the chairman or the president may prescribe, shall appoint such attorneys-in-fact, as may be necessary to act in behalf of the Company to make, execute, seal, acknowledge and deliver as surety any and all undertakings, bonds, recognizances and other surety obligations. Such attorneys-in-fact, subject to the limitations set forth in their respective powers of attorney, shall have full power to bind the Company by their signature and execution of any such instruments and to attach thereto the seal of the Company. When so executed such instruments shall be as binding as if signed by the president and attested by the secretary.

**Certificate of Designation** – The President of the Company, acting pursuant to the Bylaws of the Company, authorizes Nathan J. Zangerle, Assistant Secretary to appoint such attorneys-infact as may be necessary to act on behalf of the Company to make, execute, seal, acknowledge and deliver as surety any and all undertakings, bonds, recognizances and other surety obligations.

**Authorization** – By unanimous consent of the Company's Board of Directors, the Company consents that facsimile or mechanically reproduced signature of any assistant secretary of the Company, wherever appearing upon a certified copy of any power of attorney issued by the Company in connection with surety bonds, shall be valid and binding upon the Company with the same force and effect as though manually affixed.

I, Renee C. Llewellyn, the undersigned, Assistant Secretary, of Liberty Mutual Insurance Company, The Ohio Casualty Insurance Company, and West American Insurance Company do hereby certify that this power of attorney executed by said Companies is in full force and effect and has not been revoked.

**IN TESTIMONY WHEREOF,** I have hereunto set my hand and affixed the seals of said Companies this 17th day of January, 2025.

LIBERTY MUTUAL INSURANCE COMPANY INCORPORATED 1912 MASSACHUSETTS — THE OHIO CASUALTY INSURANCE COMPANY INCORPORATED 1919 NEW HAMPSHIRE — WEST AMERICAN INSURANCE COMPANY INCORPORATED 1991 INDIANA

By: _____
Renee C. Llewellyn, Assistant Secretary

Not valid for mortgage, note, loan, letter of credit, currency rate, interest rate or residual value guarantees.

For bond and/or Power of Attorney (POA) verification inquiries, please call 610-832-8240 or email HOSUR@libertymutual.com.

# LABOR AND MATERIAL BOND

Whereas, the City Council of the City of Redlands ("City"), State of California, and Meritage Homes of California, Inc., a California Corporation, (hereinafter designated as "Principal") have entered into an agreement dated March 18, 2025 ("Agreement"), which is hereby referred to and made a part hereof whereby Principal agrees to install and complete certain designated public improvements ("Work") for Tract No. 20528 ; and

Whereas, under the terms of the Agreement, Principal is required, before commencing the performance of the Work, to file a good and sufficient Labor and Material bond with the City to secure the claims to which reference is made in Title 3 (commencing with Section 9550) of Part 6 of Division 4 of the Civil Code of the State of California;

Now, therefore, Principal and the undersigned, as Surety, are held firmly bound unto the City and all contractors, subcontractors, laborers, material men, and other persons employed in the performance of the Agreement and referred to in the aforesaid Civil Code the sum of two million five hundred ten thousand one hundred fifty dollars ($2,510,150) for materials furnished or labor thereon of any kind, or for amounts due under the Unemployment Insurance Act with respect to the Work or labor, that said Surety will pay the same in an amount not exceeding the amount hereinabove set forth, and also in case suit is brought upon this bond, will pay, in addition to the face amount thereof, costs and reasonable expenses and fees, including reasonable attorneys' fees, incurred by the City in successfully enforcing such obligation, to be awarded and fixed by the court, and to be taxed as costs and to be included in the judgment therein rendered.

It is hereby expressly stipulated and agreed that this bond shall inure to the benefit of any and all persons, companies and corporations entitled to file claims under Title 3 (commencing with Section 9550) of Part 6 of Division 4 of the Civil Code, so as to give a right of action to them or their assigns in any suit brought upon this bond. Should the condition of this bond be fully performed, then this obligation shall become null and void, otherwise it shall be and remain in full force and effect.

The Surety hereby stipulates and agrees that no change, extension of time, alteration or addition to the terms of the Agreement or the specifications accompanying the same shall in any manner affect its obligations on this bond, and it does hereby waive notice of any such change, extension of time, alteration or addition.

In witness whereof, this instrument has been duly executed by Principal and Surety above named, on January 17, 2025.

(SEAL)
Meritage Homes of California, Inc.,
A California Corporation
(Principal)

(Signature) Hilla Sferruzza
EVP-CFO

(SEAL)

Liberty Mutual Insurance Company
(Surety)
BY: Krista M. Lee
(Signature) Krista M. Lee, Attorney-In-Fact

Address:
175 Berkeley Street
Boston, MA 02116

Telephone( 617 ) 357-9500

(Seal and Notarial Acknowledgment of Surety)

# ALL-PURPOSE ACKNOWLEDGEMENT

A notary public or other officer completing this certificate verifies only the identity of the individual who signed the document to which this certificate is attached, and not the truthfulness, accuracy, or validity of that document.

STATE OF ARIZONA )SS
COUNTY OF MARICOPA )

On January 22, 2025 before me, Julie Clark, Notary Public, personally appeared Hilla Sferruzza, EVP & CFO

who proved to me on the basis of satisfactory evidence to be the person(s) whose name(s) is/are subscribed to the within instrument and acknowledged to me that he/she/they executed the same in his/her/their authorized capacity(ies), and that by his/her/their signature(s) on the instrument the person(s), or the entity upon behalf of which the person(s) acted, executed the instrument.

I certify under PENALTY OF PERJURY under the laws of the State of Arizona that the foregoing paragraph is true and correct.

WITNESS my hand and official seal.

Signature Julie Clark

JULIE CLARK
NOTARY PUBLIC - ARIZONA
MARICOPA COUNTY
COMMISSION # 677679
MY COMMISSION EXPIRES
NOVEMBER 29, 2028

This area for official notarial seal.

## OPTIONAL SECTION - NOT PART OF NOTARY ACKNOWLEDGEMENT
## CAPACITY CLAIMED BY SIGNER

Though statute does not require the Notary to fill in the data below, doing so may prove invaluable to persons relying on the documents.

- ☐ INDIVIDUAL
- ☐ CORPORATE OFFICER(S) TITLE(S)
- ☐ PARTNER(S) ☐ LIMITED ☐ GENERAL
- ☐ ATTORNEY-IN-FACT
- ☐ TRUSTEE(S)
- ☐ GUARDIAN/CONSERVATOR
- ☐ OTHER

SIGNER IS REPRESENTING:

**Name of Person or Entity** Name of Person or Entity

## OPTIONAL SECTION - NOT PART OF NOTARY ACKNOWLEDGEMENT

Though the data requested here is not required by law, it could prevent fraudulent reattachment of this form.

**THIS CERTIFICATE MUST BE ATTACHED TO THE DOCUMENT DESCRIBED BELOW**

TITLE OR TYPE OF DOCUMENT: _____

NUMBER OF PAGES _____ DATE OF DOCUMENT _____

SIGNER(S) OTHER THAN NAMED ABOVE _____

Reproduced by First American Title Company 11/2007

# CALIFORNIA ALL- PURPOSE CERTIFICATE OF ACKNOWLEDGMENT

A notary public or other officer completing this certificate verifies only the identity of the individual who signed the document to which this certificate is attached, and not the truthfulness, accuracy, or validity of that document.

State of Washington }

County of King }

On January 17, 2025 before me, Tevy Lor, Notary Public,
(Here insert name and title of the officer)

personally appeared Krista M. Lee,
who proved to me on the basis of satisfactory evidence to be the person(s) whose name(s) is/are subscribed to the within instrument and acknowledged to me that he/she/they executed the same in his/her/their authorized capacity(ies), and that by his/her/their signature(s) on the instrument the person(s), or the entity upon behalf of which the person(s) acted, executed the instrument.

I certify under PENALTY OF PERJURY under the laws of the State of California that the foregoing paragraph is true and correct.

TEVY LOR
NOTARY PUBLIC
STATE OF WASHINGTON
License Number 28891
My Commission Expires 07/28/2028

WITNESS my hand and official seal.

Notary Public Signature (Notary Public Seal)
My Commission Expires: 07/28/2028

## ADDITIONAL OPTIONAL INFORMATION

DESCRIPTION OF THE ATTACHED DOCUMENT

_____
(Title or description of attached document)

_____
(Title or description of attached document continued)

Number of Pages _____ Document Date_____

CAPACITY CLAIMED BY THE SIGNER

- ☐ Individual (s)
- ☐ Corporate Officer
  _____
  (Title)
- ☐ Partner(s)
- ☐ Attorney-in-Fact
- ☐ Trustee(s)
- ☐ Other _____

### INSTRUCTIONS FOR COMPLETING THIS FORM

*This form complies with current California statutes regarding notary wording and, if needed, should be completed and attached to the document. Acknowledgments from other states may be completed for documents being sent to that state so long as the wording does not require the California notary to violate California notary law.*

- State and County information must be the State and County where the document signer(s) personally appeared before the notary public for acknowledgment.
- Date of notarization must be the date that the signer(s) personally appeared which must also be the same date the acknowledgment is completed.
- The notary public must print his or her name as it appears within his or her commission followed by a comma and then your title (notary public).
- Print the name(s) of document signer(s) who personally appear at the time of notarization.
- Indicate the correct singular or plural forms by crossing off incorrect forms (i.e. ~~he~~/she/~~they,~~ is /~~are~~ ) or circling the correct forms. Failure to correctly indicate this information may lead to rejection of document recording.
- The notary seal impression must be clear and photographically reproducible. Impression must not cover text or lines. If seal impression smudges, re-seal if a sufficient area permits, otherwise complete a different acknowledgment form.
- Signature of the notary public must match the signature on file with the office of the county clerk.
  - Additional information is not required but could help to ensure this acknowledgment is not misused or attached to a different document.
  - Indicate title or type of attached document, number of pages and date.
  - Indicate the capacity claimed by the signer. If the claimed capacity is a corporate officer, indicate the title (i.e. CEO, CFO, Secretary).
- Securely attach this document to the signed document with a staple.

Liberty Mutual. SURETY

# POWER OF ATTORNEY

Certificate No: 8204866

Liberty Mutual Insurance Company
The Ohio Casualty Insurance Company
West American Insurance Company

**KNOWN ALL PERSONS BY THESE PRESENTS:** That The Ohio Casualty Insurance Company is a corporation duly organized under the laws of the State of New Hampshire, that Liberty Mutual Insurance Company is a corporation duly organized under the laws of the State of Massachusetts, and West American Insurance Company is a corporation duly organized under the laws of the State of Indiana (herein collectively called the "Companies"), pursuant to and by authority herein set forth, does hereby name, constitute and appoint, Krista M. Lee all of the city of Seattle, state of Washington each individually if there be more than one named, its true and lawful attorney-in-fact to make, execute, seal, acknowledge and deliver, for and on its behalf as surety and as its act and deed, any and all undertakings, bonds, recognizances and other surety obligations, in pursuance of these presents and shall be as binding upon the Companies as if they have been duly signed by the president and attested by the secretary of the Companies in their own proper persons.

**IN WITNESS WHEREOF,** this Power of Attorney has been subscribed by an authorized officer or official of the Companies and the corporate seals of the Companies have been affixed thereto this 1st day of July, 2024.

Liberty Mutual Insurance Company
The Ohio Casualty Insurance Company
West American Insurance Company

By: _____
Nathan J. Zangerle, Assistant Secretary

STATE OF PENNSYLVANIA ss
COUNTY OF MONTGOMERY

On this 1st day of July, 2024, before me personally appeared Nathan J. Zangerle, who acknowledged himself to be the Assistant Secretary of Liberty Mutual Insurance Company, The Ohio Casualty Company, and West American Insurance Company, and that he, as such, being authorized so to do, execute the foregoing instrument for the purposes therein contained by signing on behalf of the corporations by himself as a duly authorized officer.

**IN WITNESS WHEREOF,** I have hereunto subscribed my name and affixed my notarial seal at Plymouth Meeting, Pennsylvania, on the day and year first above written.

Commonwealth of Pennsylvania - Notary Seal
Teresa Pastella, Notary Public
Montgomery County
My commission expires March 28, 2025
Commission number 1126044
Member, Pennsylvania Association of Notaries

By: _____
Teresa Pastella, Notary Public

This Power of Attorney is made and executed pursuant to and by authority of the following By-laws and Authorizations of The Ohio Casualty Insurance Company, Liberty Mutual Insurance Company, and West American Insurance Company which resolutions are now in full force and effect reading as follows:

**ARTICLE IV – OFFICERS:** Section 12. Power of Attorney.
Any officer or other official of the Corporation authorized for that purpose in writing by the Chairman or the President, and subject to such limitation as the Chairman or the President may prescribe, shall appoint such attorneys-in-fact, as may be necessary to act in behalf of the Corporation to make, execute, seal, acknowledge and deliver as surety any and all undertakings, bonds, recognizances and other surety obligations. Such attorneys-in-fact, subject to the limitations set forth in their respective powers of attorney, shall have full power to bind the Corporation by their signature and execution of any such instruments and to attach thereto the seal of the Corporation. When so executed, such instruments shall be as binding as if signed by the President and attested to by the Secretary. Any power or authority granted to any representative or attorney-in-fact under the provisions of this article may be revoked at any time by the Board, the Chairman, the President or by the officer or officers granting such power or authority.

**ARTICLE XIII - Execution of Contracts:** Section 5. Surety Bonds and Undertakings.
Any officer of the Company authorized for that purpose in writing by the chairman or the president, and subject to such limitations as the chairman or the president may prescribe, shall appoint such attorneys-in-fact, as may be necessary to act in behalf of the Company to make, execute, seal, acknowledge and deliver as surety any and all undertakings, bonds, recognizances and other surety obligations. Such attorneys-in-fact, subject to the limitations set forth in their respective powers of attorney, shall have full power to bind the Company by their signature and execution of any such instruments and to attach thereto the seal of the Company. When so executed such instruments shall be as binding as if signed by the president and attested by the secretary.

**Certificate of Designation** – The President of the Company, acting pursuant to the Bylaws of the Company, authorizes Nathan J. Zangerle, Assistant Secretary to appoint such attorneys-infact as may be necessary to act on behalf of the Company to make, execute, seal, acknowledge and deliver as surety any and all undertakings, bonds, recognizances and other surety obligations.

**Authorization** – By unanimous consent of the Company's Board of Directors, the Company consents that facsimile or mechanically reproduced signature of any assistant secretary of the Company, wherever appearing upon a certified copy of any power of attorney issued by the Company in connection with surety bonds, shall be valid and binding upon the Company with the same force and effect as though manually affixed.

I, Renee C. Llewellyn, the undersigned, Assistant Secretary, of Liberty Mutual Insurance Company, The Ohio Casualty Insurance Company, and West American Insurance Company do hereby certify that this power of attorney executed by said Companies is in full force and effect and has not been revoked.

**IN TESTIMONY WHEREOF,** I have hereunto set my hand and affixed the seals of said Companies this 17th day of January, 2025.

By: _____
Renee C. Llewellyn, Assistant Secretary

Not valid for mortgage, note, loan, letter of credit, currency rate, interest rate or residual value guarantees.

For bond and/or Power of Attorney (POA) verification inquiries, please call 610-832-8240 or email HOSUR@libertymutual.com.

RESOLUTION NO. 8529

A RESOLUTION OF THE CITY COUNCIL OF THE CITY OF REDLANDS ADOPTING A MITIGATED NEGATIVE DECLARATION AND MITIGATION MONITORING/REPORTING PROGRAM PIONEER AVENUE RESIDENTIAL PROJECT LOCATED AT THE NORTHEAST CORNER OF INTERSTATE 210 AND PIONEER AVENUE AT 1160 WEST PIONEER AVENUE (APN: 0167-061-01-0000 and 0167-061-03-0000).

WHEREAS, MLC Holdings, LLC, has filed applications for General Plan Amendment No. 145, Specific Plan No. 40 Amendment No. 49 (East Valley Corridor Specific Plan), Specific Plan No. 64 Amendment No. 1 (Bergamot Specific Plan), Tentative Tract Map No. 20528 and Commission Review and Approval No. 945 for a 117-lot single family residential development located at the northeast corner of Interstate 210, and West Pioneer Avenue at 1160 West Pioneer Avenue (APNs: 0167-061-01-0000 and 0167-061-03-0000) (the "Project"); and

WHEREAS, an Initial Study and Mitigated Negative Declaration was prepared for the Project and circulated for public review for a period of thirty days beginning on October 4, 2023, and ending on November 2, 2023; and

WHEREAS on November 3, 2023, notice of the Planning Commission's public hearing for the Project and related Project Entitlements was published in the Redlands Daily Facts and notices were mailed to property owners within a 300 foot radius; and

WHEREAS, on November 14, 2023, the Planning Commission held a public hearing and considered the staff report, oral report, the testimony, and the written evidence submitted by and on behalf of the applicant and by members of the public; and

WHEREAS, on November 14, 2023, the Planning Commission recommended to the City Council that the MND be adopted; and

WHEREAS, the MND and related materials for the Project that were reviewed by the Planning Commission in making its recommendation for approval have been forwarded to the City Council; and

WHEREAS, notice of the City Council's public hearing for the Project was published in the Redlands Daily Facts by the City Clerk; and

WHEREAS, the City Council held a duly noticed public hearing on December 19, 2023, at which interested persons had the opportunity to provide verbal and written testimony on the Project and proposed MND;

NOW, THEREFORE, BE IT RESOLVED BY THE CITY COUNCIL OF THE CITY OF REDLANDS AS FOLLOWS:

Section 1. CEQA Compliance. As the decision-making body for the Project, the City Council has reviewed and considered the information contained in the Initial Study and MND, related technical studies and analyses, public comments received, the Responses to Comments, and supporting documentation. The City Council determines that the MND and related documents contain a complete and accurate reporting of the environmental impacts and mitigation measures associated with the Project. The City Council finds that the MND was prepared in compliance with CEQA, and that the City complied with CEQA's procedural and substantive requirements.

Section 2. Independent Judgment of Lead Agency. The MND for the Project, prepared by the City's environmental consultant, reflects the City's independent judgment and analysis. The City has exercised independent judgment and analysis in accordance with Public Resources Code Section 21082.1(c)(3) in managing as appropriate the environmental consultant, and directing the consultant in the preparation of the MND. The City Council has independently reviewed and analyzed the MND and accompanying technical studies/reports, and finds that the MND reflects the independent judgment and analysis of the City.

Section 3. Adoption of Mitigated Negative Declaration. The City Council finds on the basis of the whole record that there is no substantial evidence that the Project will have a significant effect on the environment, including mitigation measures and any project design features, and hereby adopts the MND for the Project.

Section 4. Adoption of Mitigation Monitoring/Reporting Program. Pursuant to Public Resources Code section 21081.6, the City hereby adopts the Mitigation Monitoring/Reporting Program attached to the MND, and all mitigation measures are included as conditions of approval for the Project.

Section 5. Notice of Determination. The City Council adopt the MND for the Project and the accompanying Mitigation Monitoring and Reporting Program and direct staff to file and post a Notice of Determination in accordance with the State CEQA Guidelines.

Section 6. Custodian of Records. The custodian of documents and other material which constitute the record of proceedings upon which its decision is based is the Development Services Director or designee, and all records are located in the City's Development Services Department.

Section 7. Effective Date. This Resolution shall take effect upon adoption.

ADOPTED, SIGNED AND APPROVED this December 19, 2023.

Eddie Tejeda, Mayor

ATTEST:

Jeanne Donaldson, City Clerk

I, Jeanne Donaldson, City Clerk of the City of Redlands, do hereby certify that the foregoing Resolution was duly adopted by the City Council at a regular meeting thereof held on the 19th day of December, 2023, by the following vote:

AYES: Councilmembers Barich, Davis, Guzman-Lowery, Saucedo; Mayor Tejeda
NOES: None
ABSENT: None
ABSTAINED: None

Jeanne Donaldson, City Clerk

RESOLUTION NO. 8530

A RESOLUTION OF THE CITY COUNCIL OF THE CITY OF REDLANDS APPROVING THE SOCIO-ECONOMIC COST/BENEFIT STUDY FOR THE PIONEER AVENUE RESIDENTIAL PROJECT LOCATED AT THE NORTHEAST CORNER OF INTERSTATE 210 AND PIONEER AVENUE AT 1160 WEST PIONEER AVENUE (APN: 0167-061-01-0000 and 0167-061-03-0000).

WHEREAS, MLC Holdings, LLC, has filed applications for General Plan Amendment No. 145, Specific Plan No. 40 Amendment No. 49 (East Valley Corridor Specific Plan), Specific Plan No. 64 Amendment No. 1 (Bergamot Specific Plan), Tentative Tract Map No. 20528 and Commission Review and Approval No. 945 for a 117-lot single family residential development located at the northeast corner of Interstate 210, and West Pioneer Avenue at 1160 West Pioneer Avenue (APNs: 0167-061-01-0000 and 0167-061-03-0000) (the "Project"); and

WHEREAS on November 3, 2023, notice of the Planning Commission's public hearing for the Project Entitlements was published in the Redlands Daily Facts and notices were mailed to property owners within a 300 foot radius; and

WHEREAS, on November 14, 2023, the Planning Commission held a public hearing and considered the staff report, oral report, the testimony, and the written evidence submitted by and on behalf of the applicant and by members of the public; and

WHEREAS, on November 14, 2023, the Planning Commission recommended to the City Council that the Socio-Economic Cost/Benefit Study be adopted; and

WHEREAS, a copy of the Socio-Economic Cost/Benefit Study and related materials for the Project that were reviewed by the City's Planning Commission in making its recommendation have been forwarded to the City Council; and

WHEREAS, notice of the City Council's public hearing for the proposed Project, including the Socio- Economic Cost/Benefit Study, was published in the Redlands Daily Facts by the City Clerk; and

WHEREAS, the City Council held a duly noticed public hearing on December 19, 2023, at which interested persons had the opportunity to provide verbal and written testimony on the Project and Socio-Economic Cost/Benefit Study;

NOW, THEREFORE, BE IT RESOLVED BY THE CITY COUNCIL OF THE CITY OF REDLANDS AS FOLLOWS:

Section 1. The City Council of the City of Redlands herby approved the Socio-Economic Cost/Benefit Study for the Project based upon the following findings:

A. THE PROJECT WILL NOT CREATE UNMITIGATED PHYSICAL BLIGHT WITHIN THE CITY OR OVERBURDEN PUBLIC SERVICES INCLUDING, WITHOUT LIMITATION, THE SUFFICIENCY OF POLICE AND FIRE PROTECTION SERVICES.

The Project will not create significant unmitigable physical blight in the City of Redlands ("City") or overburden public services, including without limitation police and fire protection services, because the mitigation measures for environmental impacts, described in the study, have been added to the project as Conditions of Approval.

The Project provides improvements to enhance the surrounding community through the provision of significant areas of public open space, trail connections to the Santa Ana River Trail, residences with architectural enhancement along all public rights-of-way, decorative fencing and a masonry perimeter wall, and the planting of new trees on the Project site.

The Project developer will make improvements to facilitate implementation of the Project, including the construction of adjacent roadways and roadway improvements the project frontage. The Project would provide connections to existing City infrastructure. Utilities, less than 66KV, will be placed underground. The Project developer is required to fund its fair share allocation of any necessary public infrastructure associated with development of the Project.

B. THE BENEFITS TO THE CITY RESULTING FROM DEVELOPMENT OF THE PROJECT OUTWEIGH ANY DIRECT COST TO THE CITY THAT MAY RESULT.

The Socio-Economic Cost/Benefit Study demonstrates that, annually, the Project will generate "new net" revenues of approximately $189,331 and approximately $82,854 in cost and have a positive balance of $106,476 (or ratio +2.29). For every dollar the City spends in providing services to the Project, the City will receive $2.29 in "new net" revenue. The Project would provide for the development of 117 new single family residences. Schools will be enhanced with the payment of school fees. Further, with the additional revenue provided to the City through increased property tax assessment, and the payment of development impact fees, indirect funding will be provided for cultural enhancements, downtown district enhancements, public safety (Police and Fire) enhancements, and traffic enhancements. The project also provides a public open space to be built constructed by the project.

Section 2. Effective Date. This Resolution shall take effect upon adoption.

ADOPTED, SIGNED AND APPROVED this 19th day of December, 2023.

Eddie Tejeda, Mayor

ATTEST:

Jeanne Donaldson, City Clerk

I, Jeanne Donaldson, City Clerk of the City of Redlands, do hereby certify that the foregoing Resolution was duly adopted by the City Council at a regular meeting thereof held on the 19th day of December, 2023, by the following vote:

| | |
|---|---|
| AYES: | Councilmembers Barich, Davis, Guzman-Lowery, Saucedo; Mayor Tejeda |
| NOES: | None |
| ABSENT: | None |
| ABSTAINED: | None |

Jeanne Donaldson, City Clerk

RESOLUTION NO. 8531

A RESOLUTION OF THE CITY COUNCIL OF THE CITY OF REDLANDS APPROVING THE CONVERSION OF AGRICULTURAL LAND TO RESIDENTIAL LAND PURSUANT TO SECTION 4.40s OF THE REDLANDS GENERAL PLAN FOR 14.62 ACRES LOCATED AT THE NORTHEAST CORNER OF INTERSTATE 210 AND PIONEER AVENUE AT 1160 WEST PIONEER AVENUE (APN: 0167-061-01-0000 and 0167-061-03-0000).

WHEREAS, by ballot initiative in 1997, Measure "U" was enacted by the residents of the City to amend the Redlands General Plan and establish comprehensive growth management principles to preserve, enhance and maintain the quality of life in the Redlands community; and

WHEREAS, MLC Holdings, LLC, has filed applications for General Plan Amendment No. 145, Specific Plan No. 40 Amendment No. 49 (East Valley Corridor Specific Plan), Specific Plan No. 64 Amendment No. 1 (Bergamot Specific Plan), Tentative Tract Map No. 20528 and Commission Review and Approval No. 945 for a 117-lot single family residential development located at the northeast corner of Interstate 210, and West Pioneer Avenue at 1160 West Pioneer Avenue (APNs: 0167-061-01-0000 and 0167-061-03-0000) (the "Project"); and

WHEREAS, the Project site currently contained active agricultural production on June 1, 1987, thus making the provisions of Measure "U" applicable to the Project; and

WHEREAS, the Project involves the adoption of a new Specific Plan for a 117-lot single family residential development at a density of 8.1 units per acre, which exceeds the Residential Estate (R-E) density of 3.0 units per acre; and

WHEREAS on November 3, 2023, notice of the Planning Commission's public hearing for the Project and related Project Entitlements was published in the Redlands Daily Facts and notices were mailed to property owners within a 300 foot radius; and

WHEREAS, on November 14, 2023, the Planning Commission held a public hearing and considered the staff report, oral report, the testimony, and the written evidence submitted by and on behalf of the applicant and by members of the public; and

WHEREAS, on November 14, 2023, the Planning Commission recommended approval of the Project to the City Council; and

WHEREAS, notice of the City Council's public hearing for the Amendment was published in the Redlands Daily Facts by the City Clerk; and

WHEREAS, on December 19, 2023, the City Council held a public hearing and considered the staff written and oral reports, the recommendation of the Planning Commission, the testimony and written evidence submitted by and on behalf of the applicant, and testimony by members of the public; and

WHEREAS, the purpose of the following analysis is to determine whether the increased density permitted by designating the property as Specific Plan No. 64 which would allow approximately 8.1 units per gross acre would be consistent with the mandatory findings required by Measure "U."

NOW, THEREFORE, BE IT RESOLVED BY THE CITY COUNCIL OF THE CITY OF REDLANDS AS FOLLOWS:

Section 1. In accordance with Section 4.40s of the Redlands General Plan, the City Council of the City of Redlands hereby approves the re-zoning of lands designated "Urban Reserve" in the Redlands General Plan (as of June 1, 1987) or in active agricultural production (as of November 3, 1986) to permit residential density greater than the Residential Estate (R-E) classification as the same existed as of June 1, 1987, based upon the following findings:

A. There are substantial and overriding economic or social benefits to the City and its residents and taxpayers from the proposed density.

Under the existing zoning designation, the East Valley Corridor Specific Plan (EVCSP) contains goals and policies aimed at preserving agricultural uses within the East Valley Corridor as long as this type of land use remains realistic and financially feasible. As continued agricultural production on the site has been determined to be infeasible in the long term, through the removal of the remaining citrus groves in 2009, the conversion of the site to development would be consistent with the EVCSP's intent.

The additional 117 units would substantially add to the tax revenue accruing to the City that helps fund infrastructure and public services, which is a direct economic benefit to the City. As part of the project, the developer will also pay development impact fees for transportation and other infrastructure, as well as police, fire, and for the library. From a social benefit standpoint, the project will include common open space through pocket parks, and a public open space for gathering, recreation and socialization of residents of the whole City of Redlands, filling a recognized public need.

In addition, the construction of new homes on small lots provides a variety of housing types and affordability levels in the City of Redlands, which is consistent with the policies contained within the City's current 2035 General Plan and will contribute an additional 117 new housing units that will help the City meet its overall housing goals.

B. The proposed density increase will not cause adverse environmental impacts, either individually or cumulatively, directly or indirectly.

The project has been analyzed through the drafting of an Initial Study/Mitigated Negative Declaration, with thirteen mitigation measures that have been incorporated as Conditions of Approval, referencing technical studies prepared for the project, to ensure the project will not have a significant impact on the environment, either individually or cumulatively, directly, or indirectly.

C. The proposed density increase will not convert viable agricultural land to nonagricultural uses.

The proposed density increase would not convert viable agricultural land to non-agricultural uses. The area surrounding the project site is becoming urbanized, with development to the north and south and the existing Citrus Valley High School to the east. Aerial photograph indicates that the agricultural uses, which once utilized this area of the City, have been removed over time as citrus groves have become less economically viable. The IS/MND, discusses Agriculture and Forestry Resources, and how the loss of farmland at the site was evaluated in the 2035 General Plan Environmental Impact Report (EIR) in the larger context of the General Plan. This specific site is one of many locations identified in the General Plan EIR as having prime farmland that has a land use designation that would convert the property to non-agricultural use. The City adopted findings and a Statement of Overriding Considerations for the General Plan EIR. In addition, the conversion of this agricultural site was anticipated by the Environmental Impact Report (EIR) prepared for the EVCSP, which evaluated the impacts to Agriculture and adopted a Statement of Overriding Consideration, as well. Therefore, the increase in density from 3.0 units per acre to 8.1 units per acre will not convert viable agricultural lands to non-agricultural uses.

D. The proposed density will not have a growth-inducing effect on other property.

The property is surrounded by urban development with a freeway and commercial development to the west, high school to the east, residential to the north and southeast, as well as commercially designated property to the south and west. The development of this property as well as those of the adjacent properties with residential land use designations was anticipated when Citrus High School was proposed in 2004 and in the City's most recent General Plan update. While the adjacent parcels may develop in the future, the proposed project's density is consistent with its proposed land use designation of Medium Density Residential and the development of this property on its own would not be considered to contribute to growth-inducing effects on adjacent properties. As such, the density increase is not expected to have any growth-inducing effect on other property, as there are no residentially designated properties adjacent to the project site that have not already been developed.

E. The resulting use will be compatible with uses on adjacent land.

The project has been designed to be compatible with the current residential development in the Bergamot Specific Plan area to the north, adjacent vacant parcels as well as the Citrus Valley High school located to the south. The development of Citrus Valley High School within a commercially zoned area changed the context of the area, and residential uses adjacent to the high school would be a compatible use. The project incorporates pedestrian facilities to accommodate safe routes to the nearby high school, sidewalks and an extension of the Santa Ana River Trail on the west side of the property.

F. The proposed density or height increase will not require substantial expansion of public infrastructure, facilities or services.

The project would connect and enhance the existing infrastructure in the area and would not require substantial infrastructure improvements to water and sewer service to accommodate project demands. Sewer service and water service will be extended to the project from Texas Street with the development to the north and located adjacent to the project site. The existing water treatment facilities within the City, are capable of serving the proposed project and not substantial expansion would be required. The developer would be required to pay the appropriate development impact fees for transportation and infrastructure improvements as well as school fees, and development impact fees for public safety, parks and open spaces and the library. These developer impact fees represent the new development's fair share of planned facilities and are not intended to address any needed facilities required to serve existing development. Therefore, the additional residential density would not require substantial expansion of public infrastructure, facilities or services.

Section 2. In accordance with Measure "U," this resolution has been adopted by a 4/5ths vote of the membership of the City Council.

Section 3. This Resolution shall become effective upon adoption.

ADOPTED, SIGNED AND APPROVED this 19th day of December, 2023.

Eddie Tejeda, Mayor

ATTEST:

Jeanne Donaldson, City Clerk

I, Jeanne Donaldson, City Clerk of the City of Redlands, do hereby certify that the foregoing Resolution was duly adopted by the City Council at a regular meeting thereof held on the 19th day of December, 2023, by the following vote:

AYES: Councilmembers Barich, Davis, Guzman-Lowery, Saucedo; Mayor Tejeda
NOES: None
ABSENT: None
ABSTAINED: None

Jeanne Donaldson, City Clerk

RESOLUTION NO. 8532

A RESOLUTION OF THE CITY COUNCIL OF THE CITY OF REDLANDS ADOPTING AMENDMENT NO. 145 TO THE REDLANDS GENERAL PLAN TO CHANGE THE LAND USE DESIGNATION FROM 'COMMERCIAL/INDUSTRIAL' TO 'MEDIUM DENSITY RESIDENTIAL' FOR TWO PARCELS TOTALING 14.62 ACRES LOCATED AT 1160 WEST PIONEER AVENUE (APNS: 0167-061-01-0000 and 0167-061-03-0000).

WHEREAS, MLC Holdings, LLC, has filed applications for General Plan Amendment No. 145, Specific Plan No. 40 Amendment No. 49 (East Valley Corridor Specific Plan), Specific Plan No. 64 Amendment No. 1 (Bergamot Specific Plan), Tentative Tract Map No. 20528 and Commission Review and Approval No. 945 for a 117-lot single family residential development located at the northeast corner of Interstate 210, and West Pioneer Avenue at 1160 West Pioneer Avenue (APNs: 0167-061-01-0000 and 0167-061-03-0000) (the "Project"); and

WHEREAS, on November 3, 2023, notice of the Planning Commission's public hearing for the Project was published in the Redlands Daily Facts; and

WHEREAS, on November 14, 2023, the Planning Commission held a noticed public hearing at which interested persons had an opportunity to testify in support of, or in opposition to, the Project, and at which the Planning Commission considered the Project; and

WHEREAS, on November 14, 2023, the Planning Commission recommended to the City Council that General Plan Amendment No. 145 be approved; and

WHEREAS on or about December 8, 2023, notice of the City Council's public hearing for the Amendment was published in the Redlands Daily Facts by the City Clerk; and

WHEREAS, on December 19, 2023, the City Council held a public hearing and considered the staff written and oral reports, the recommendation of the Planning Commission, the testimony and written evidence submitted by and on behalf of the applicant, and testimony by members of the public; and

WHEREAS, following the public hearing on the Amendment, the City Council determined that adoption of the Amendment is in the best interests of the public health, safety and general welfare;

NOW, THEREFORE, BE IT RESOLVED BY THE CITY COUNCIL OF THE CITY OF REDLANDS AS FOLLOWS:

SECTION 1. APPROVAL. General Plan Amendment No. 145 is hereby approved to change the General Plan land use designation of two parcels, totaling approximately 14.62 acres,

from 'Commercial/Industrial' to 'Medium Density Residential' located at 1160 West Pioneer Avenue (APNs: 0167-061-01-0000 and 0167-061-03-0000) as more particularly shown on the map attached hereto as Exhibit "A."

SECTION 2. EFFECTIVE DATE. This Resolution shall become effective upon adoption.

ADOPTED, SIGNED AND APPROVED this 19th day of December, 2023.

Eddie Tejeda, Mayor

ATTEST:

Jeanne Donaldson, City Clerk

I, Jeanne Donaldson, City Clerk of the City of Redlands, do hereby certify that the foregoing Resolution was duly adopted by the City Council at a regular meeting thereof held on the 19th day of December, 2023, by the following vote:

| | |
|---|---|
| AYES: | Councilmembers Barich, Davis, Guzman-Lowery, Saucedo; Mayor Tejeda |
| NOES: | None |
| ABSENT: | None |
| ABSTAINED: | None |

Jeanne Donaldson, City Clerk

**Attachment A-1**

Existing General Plan Land Use Designation

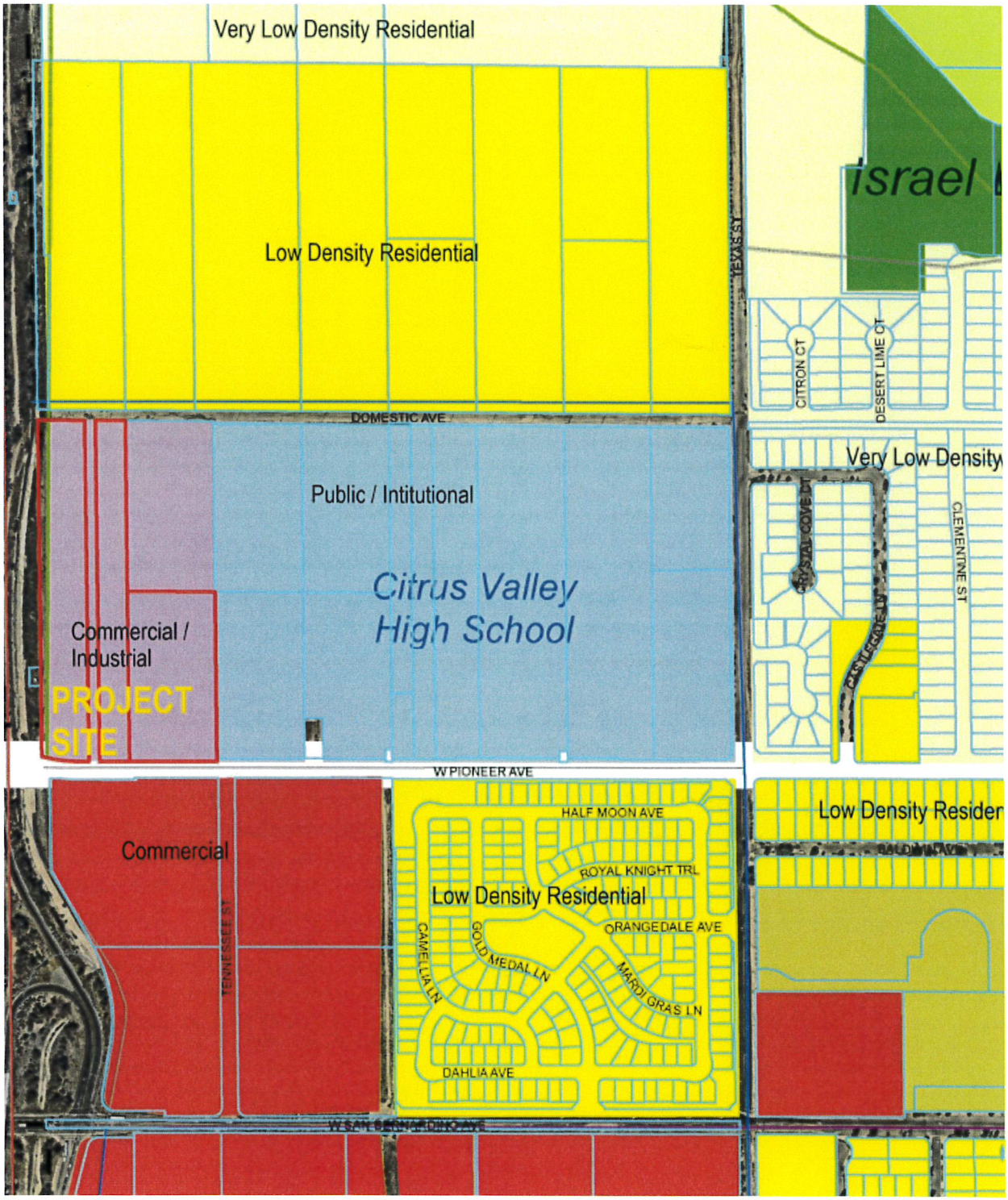

**Attachment A-2**

Proposed General Plan Land Use Designation (Amendment)

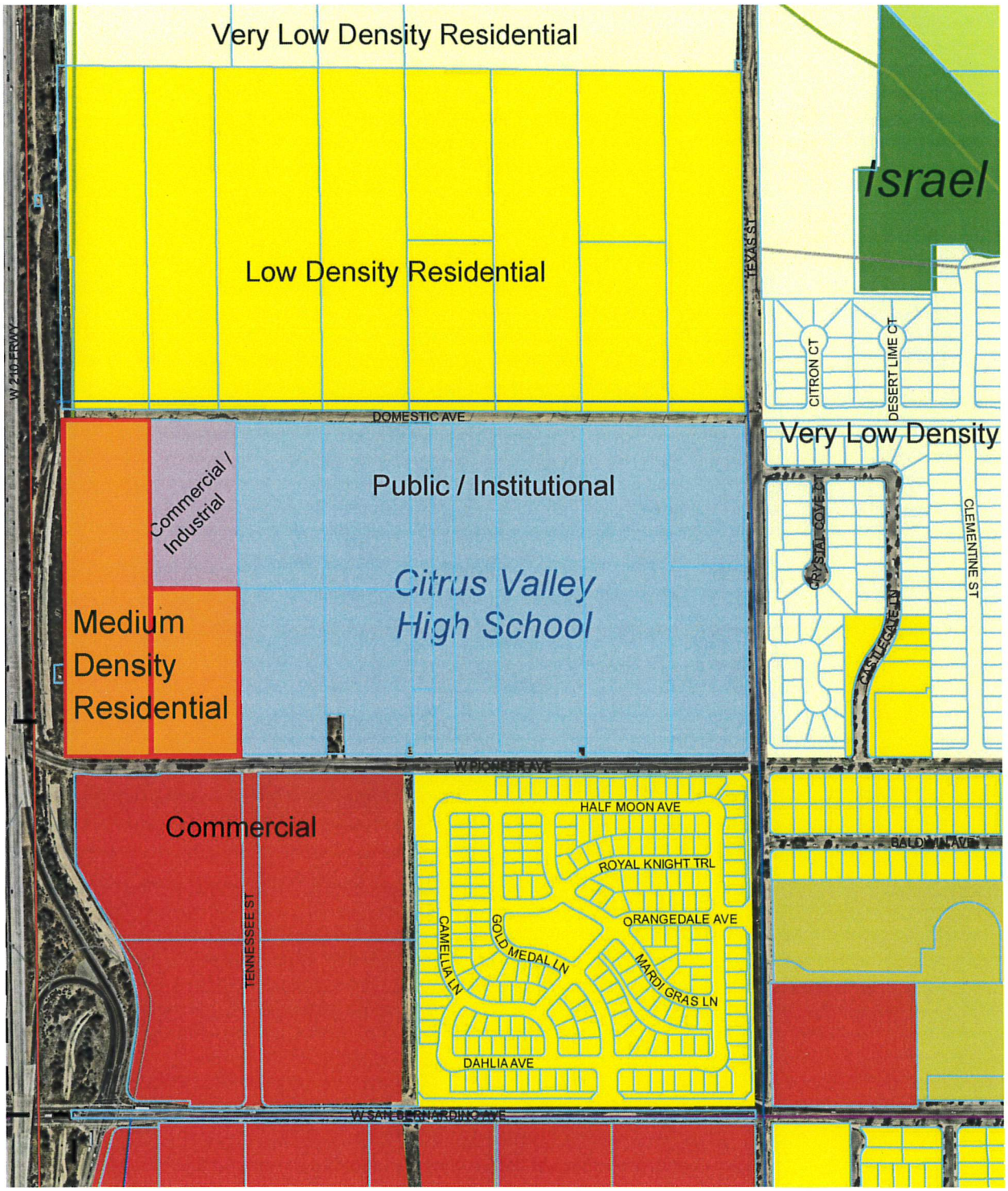

RESOLUTION NO. 8533

A RESOLUTION OF THE CITY COUNCIL OF THE CITY OF REDLANDS APPROVING SPECIFIC PLAN AMENDMENT NO. 49 TO THE EAST VALLEY CORRIDOR SPECIFIC PLAN (SPECIFIC PLAN NO. 40), TO AMEND THE LAND USE MAP TO REMOVE TWO PARCELS CONTAINING APPROXIMATELY 14.62 ACRES FROM THE EAST VALLEY CORRIDOR SPECIFIC PLAN, RESCINDING THE ZONING DESIGNATION OF SCIENCE RESEARCH PARK (EV/SRP) LOCATED AT THE NORTHEAST CORNER OF INTERSTATE 210 AND PIONEER AVENUE AT 1160 WEST PIONEER AVENUE (APN: 0167-061-01-0000 and 0167-061-03-0000).

WHEREAS, MLC Holdings, LLC, has filed applications for General Plan Amendment No. 145, Specific Plan No. 40 Amendment No. 49 (East Valley Corridor Specific Plan), Specific Plan No. 64 Amendment No. 1 (Bergamot Specific Plan), Tentative Tract Map No. 20528 and Commission Review and Approval No. 945 for a 117-lot single family residential development located at the northeast corner of Interstate 210, and West Pioneer Avenue at 1160 West Pioneer Avenue (APNs: 0167-061-01-0000 and 0167-061-03-0000) (the "Project"); and

WHEREAS on November 3, 2023, notice of the Planning Commission's public hearing for the Project and related Project Entitlements was published in the Redlands Daily Facts and notices were mailed to property owners within a 300-foot radius; and

WHEREAS, at the public hearing on November 14, 2023, the Planning Commission determined that the Specific Plan Amendment would be in conformity with the 2035 General Plan, and adopted Resolution No. 1640 recommending approval for Amendment No. 49 to the East Valley Corridor Specific Plan (Specific Plan No. 40); and

WHEREAS, notice of the City Council's public hearing for Specific Plan Amendment No. 49 was published in the Redlands Daily Facts by the City Clerk; and

WHEREAS, on December 19, 2023, the City Council held a public hearing and considered the staff written and oral reports, the recommendation of the Planning Commission, the testimony and written evidence submitted by and on behalf of the applicant, and testimony by members of the public.

NOW, THEREFORE, BE IT RESOLVED BY THE CITY COUNCIL OF THE CITY OF REDLANDS AS FOLLOWS:

Section 1. General Plan Conformity. The proposed Specific Plan Amendment to remove the Project site (the proposed Bergamot Specific Plan Amendment) from the boundaries of the East Valley Corridor Specific Plan will conform with the Redlands General Plan.

Section 2. Approval of Specific Plan Amendment No. 49 to the East Valley Corridor Specific Plan. Specific Plan Amendment No. 49 to the East Valley Corridor Specific Plan (Specific Plan No. 40) is hereby approved. Specific Plan Amendment No. 49 shall amend the EVCSP land use map and city's Zoning Map to remove following two parcels (APNs: 0167-061-01-0000 and 0167-061-03-0000) from the East Valley Corridor Specific Plan boundary, rescinding the zoning designation of "Science Research Park District (EV/SRP)" as more particularly shown in "Exhibit "A" attached hereto.

Section 3. Effective Date. This Resolution shall become effective upon adoption.

ADOPTED, SIGNED AND APPROVED this 19th day of December, 2023.

Eddie Tejeda, Mayor

ATTEST:

Jeanne Donaldson, City Clerk

I, Jeanne Donaldson, City Clerk of the City of Redlands, do hereby certify that the foregoing Resolution was duly adopted by the City Council at a regular meeting thereof held on the 19th day of December, 2023, by the following vote:

| | |
|---|---|
| AYES: | Councilmembers Barich, Davis, Guzman-Lowery, Saucedo; Mayor Tejeda |
| NOES: | None |
| ABSENT: | None |
| ABSTAINED: | None |

Jeanne Donaldson, City Clerk

Exhibit "A"

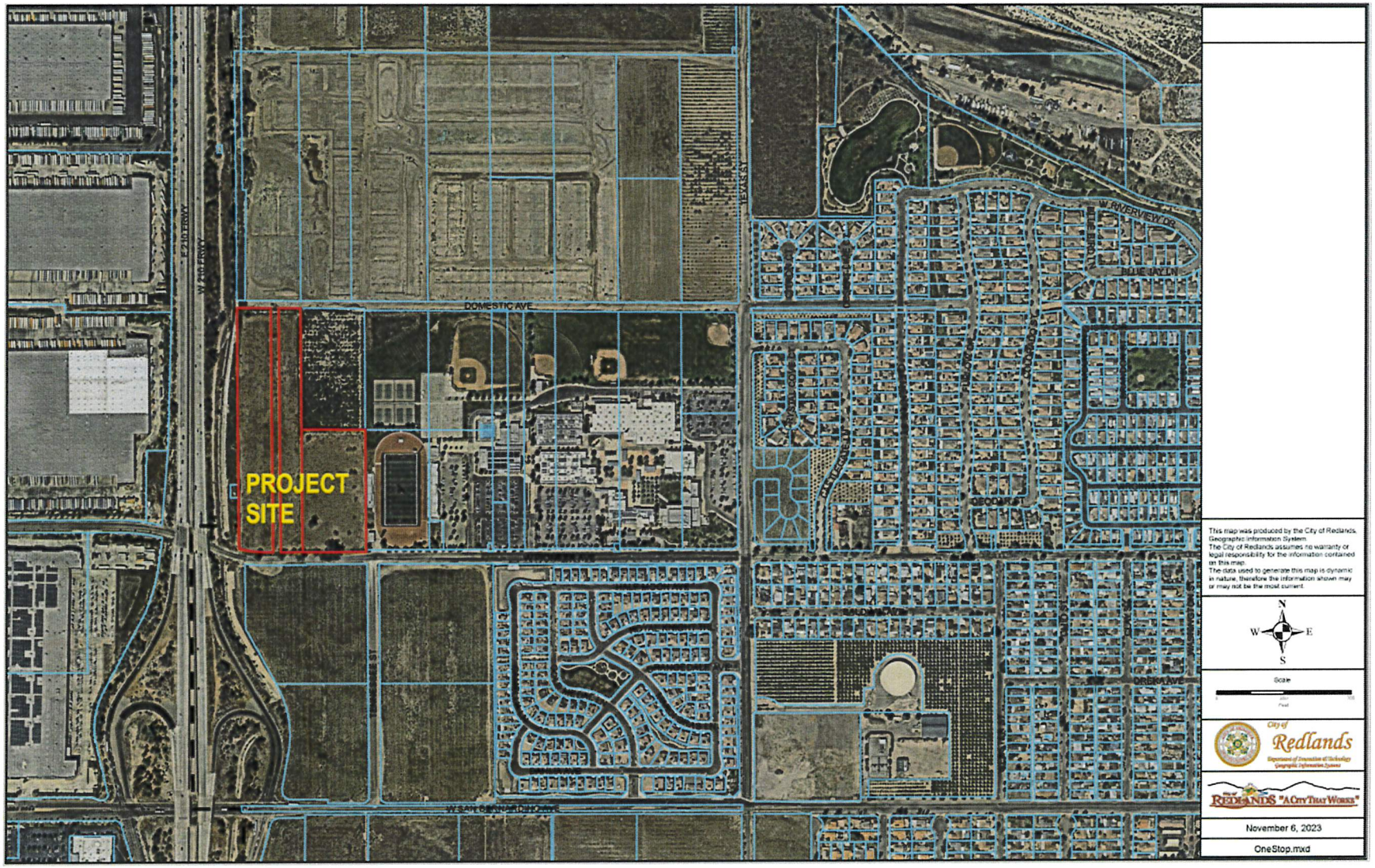
PROJECT SITE
DOMESTIC AVE
W RIVERVIEW DR
BLUE JAY LN
This map was produced by the City of Redlands Geographic Information System.
The City of Redlands assumes no warranty or legal responsibility for the information contained on this map.
The data used to generate this map is dynamic in nature, therefore the information shown may or may not be the most current.
N
W
E
S
Scale
City of Redlands
REDLANDS "A City That Works"
November 6, 2023
OneStop.mxd

RESOLUTION NO. 8534

A RESOLUTION OF THE CITY COUNCIL OF THE CITY OF REDLANDS APPROVING SPECIFIC PLAN AMENDMENT NO. 1 TO THE BERGAMOT SPECIFIC PLAN (SPECIFIC PLAN NO. 64), TO ADD APPROXIMATELY 14.62 ACRES LOCATED AT THE NORTHEAST CORNER OF INTERSTATE 210 AND PIONEER AVENUE AT 1160 WEST PIONEER AVENUE (APN: 0167-061-01-0000 & 0167-061-03-0000) TO THE BERGAMOT SPECIFIC PLAN, DESIGNATE THE NEW RESIDENTIAL AREA AS NEIGHBORHOOD 4 (N-4) AND ESTABLISH DEVELOPMENT STANDARDS FOR NEIGHBORHOOD 4 (N-4).

WHEREAS, MLC Holdings, LLC, has filed applications for General Plan Amendment No. 145, Specific Plan No. 40 Amendment No. 49 (East Valley Corridor Specific Plan), Specific Plan No. 64 Amendment No. 1 (Bergamot Specific Plan), Tentative Tract Map No. 20528 and Commission Review and Approval No. 945 for a 117-lot single family residential development located at the northeast corner of Interstate 210, and West Pioneer Avenue at 1160 West Pioneer Avenue (APNs: 0167-061-01-0000 and 0167-061-03-0000) (the "Project"); and

WHEREAS on November 3, 2023, notice of the Planning Commission's public hearing for the Project and related Project Entitlements was published in the Redlands Daily Facts and notices were mailed to property owners within a 300-foot radius; and

WHEREAS, at the public hearing on November 14, 2023, the Planning Commission determined that the Specific Plan Amendment would be in conformity with the 2035 General Plan, and adopted Resolution No. 1641 recommending approval for Amendment No. 1 to the Bergamot Specific Plan (Specific Plan No. 64); and

WHEREAS, notice of the City Council's public hearing for Specific Plan Amendment No. 1 was published in the Redlands Daily Facts by the City Clerk; and

WHEREAS, on December 19, 2023, the City Council held a public hearing and considered the staff written and oral reports, the recommendation of the Planning Commission, the testimony and written evidence submitted by and on behalf of the applicant, and testimony by members of the public.

NOW, THEREFORE, BE IT RESOLVED BY THE CITY COUNCIL OF THE CITY OF REDLANDS AS FOLLOWS:

Section 1. General Plan Conformity. The proposed Specific Plan Amendment to add the Project site (the proposed Bergamot Specific Plan Amendment) to the boundaries of the Bergamot Specific Plan area will conform with the Redlands General Plan.

Section 2. Approval of Specific Plan Amendment No. 1 to the Bergamot Specific Plan. Specific Plan Amendment No. 1 to the Bergamot Specific Plan (Specific Plan No. 64) is hereby approved. Specific Plan Amendment No. 1 shall amend the Bergamot Specific Plan land use map and city's Zoning Map to add the following two parcels (APNs: 0167-061-01-0000 and 0167-061-03-0000) to the Bergamot Specific Plan boundary, designate the area as "Neighborhood 4" (N-4), and establish development standards for Neighborhood 4 (N-4), as more particular detailed within the document attached hereto as Exhibit "A".

Section 3. Effective Date. This Resolution shall become effective upon adoption.

ADOPTED, SIGNED AND APPROVED this 19th day of December, 2023.

Eddie Tejeda, Mayor

ATTEST:

Jeanne Donaldson, City Clerk

I, Jeanne Donaldson, City Clerk of the City of Redlands, do hereby certify that the foregoing Resolution was duly adopted by the City Council at a regular meeting thereof held on the 19th day of December, 2023, by the following vote:

| | |
|---|---|
| AYES: | Councilmembers Barich, Davis, Guzman-Lowery, Saucedo; Mayor Tejeda |
| NOES: | None |
| ABSENT: | None |
| ABSTAINED: | None |

Jeanne Donaldson, City Clerk

Exhibit "A"

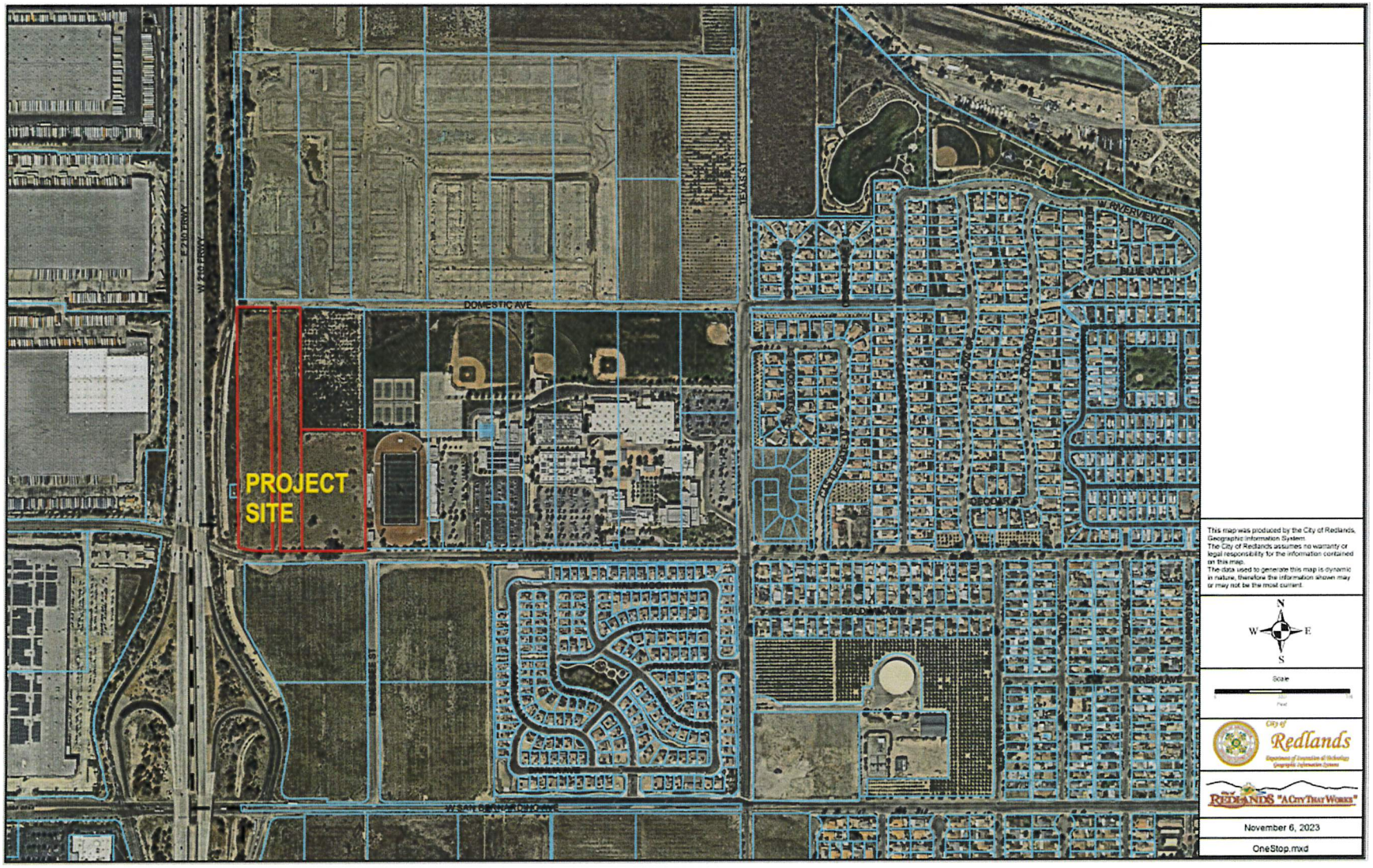
PROJECT SITE
DOMESTIC AVE
W RIVERVIEW DR
BLUE JAY LN
GREEN AVE
This map was produced by the City of Redlands, Geographic Information System.
The City of Redlands assumes no warranty or legal responsibility for the information contained on this map.
The data used to generate this map is dynamic in nature, therefore the information shown may or may not be the most current.
N
W
E
S
Scale
City of Redlands
Department of Innovation & Technology
Geographic Information Systems
REDLANDS "A City That Works"
November 6, 2023
OneStop.mxd

RESOLUTION NO. 8535

A RESOLUTION OF THE CITY COUNCIL OF THE CITY OF REDLANDS APPROVING TENTATIVE TRACT MAP NO. 20528 FOR THE SUBDIVISION OF 14.62 ACRES INTO 117 SINGLE FAMILY RESIDENTIAL LOTS FOR DETACHED SINGLE-FAMILY DWELLING UNITS, 26 LETTERED LOTS FOR PRIVATE ALLEYS AND DRIVE AISLES, NINE LETTERED LOTS FOR ON-SITE LANDSCAPING, PUBLIC OPEN SPACE, AND PRIVATE ON-SITE OPEN SPACE, FOR THE CONSTRUCTION OF 117 MOTOR COURT HOMES AND RELATED SITE IMPROVEMENTS. THE PROJECT SITE IS LOCATED AT THE NORTHEAST CORNER OF INTERSTATE 210 AND PIONEER AVENUE AT 1160 WEST PIONEER AVENUE (APN: 0167-061-01-0000 AND 0167-061-03-0000).

WHEREAS, MLC Holdings, LLC, has filed applications for General Plan Amendment No. 145, Specific Plan No. 40 Amendment No. 49 (East Valley Corridor Specific Plan), Specific Plan No. 64 Amendment No. 1 (Bergamot Specific Plan), Tentative Tract Map No. 20528 and Commission Review & Approval No. 945 for a 117-lot single family residential development located at the northeast corner of Interstate 210, and West Pioneer Avenue at 1160 West Pioneer Avenue (APNs: 0167-061-01-0000 and 0167-061-03-0000) (the "Project"); and

WHEREAS, the City Council has the authority per Chapter 17.07 of the Redlands Municipal Code to take action on Tentative Tract No. 20528 to subdivide approximately 14.62 acres into 117 single family residential lots with 26 lettered lots for private alleys and drive aisles, nine lettered lots and the construction of 117 single-family motor court homes; and

WHEREAS on November 3, 2023, notice of the Planning Commission's public hearing for the Project and related Project Entitlements was published in the Redlands Daily Facts and notices were mailed to property owners within a 300 foot radius; and

WHEREAS, on November 14, 2023, the Planning Commission held a public hearing and considered the staff report, oral report, the testimony, and the written evidence submitted by and on behalf of the applicant and by members of the public; and

WHEREAS, on November 14, 2023, the Planning Commission recommended to the City Council that Tentative Tract Map No. 20528 and Commission Review and Approval No. 945 be approved; and

WHEREAS, notice of the City Council's public hearing for Tentative Tract Map No. 20528 and Commission Review & Approval No. 945 was published in the Redlands Daily Facts by the City Clerk; and

WHEREAS, on December 19, 2023, the City Council held a public hearing and considered the staff written and oral reports, the recommendation of the Planning Commission, the testimony and written evidence submitted by and on behalf of the applicant, and testimony by members of the public.

NOW, THEREFORE, BE IT RESOLVED BY THE CITY COUNCIL OF THE CITY OF REDLANDS AS FOLLOWS:

SECTION 1. The City Council of the City of Redlands hereby approves Tentative Tract Map No. 20528 and related Inclusionary Housing Plan subject to the Conditions of Approval attached hereto as Exhibits "A," "B," and "C," and based upon the following findings:

1) *The proposed map is consistent with the General Plan or any applicable specific plan, or other applicable provisions of the Redlands Municipal Code.*

The proposed map will be consistent with the General Plan. The project's proposed Medium Density Residential land use designation allows for 8-15 units per acre and the project has been designed at 8.1 units per acre. The tentative tract map is also consistent with the policies contained within the General Plan, which encourages small-lot subdivisions. The proposed map will be consistent with the Bergamot Specific Plan (Specific Plan No. 64), as a Specific Plan Amendment is being processed concurrently, and the Specific Plan's design guidelines and development standards will support development of the project. The proposed map will also be consistent with the provisions of the Redlands Municipal Code.

2) *The site is physically suitable for the proposed type of development.*

The project site is physically suitable for the type of development. The site has a relatively flat grade with a very gradual 2 percent fall towards the northwest over distance, and is large enough at 14.62 acres to be subdivided into 117 residential lots, 26 lettered lots for private alleys and drive aisles, nine lettered lots for on-site landscaping, public open space, private on-site open space and the construction of the necessary on-site circulation. On-site and off-site improvements proposed as part of the project's design will ensure the property is compatible with adjacent developments and mitigate potential impacts to traffic and other environmental factors to a less than significant level.

3) *The site is physically suitable for the density of the development.*

The maximum density allowed within the Medium Density Residential Land Use Designation is fifteen (15) units per acre. The project is designed at 8.1 units per acre. The project site is relatively flat in topography, and does not include the creation of residential lots on land with slopes exceeding 15%. As such, the site is physically suitable for the density of development proposed.

4) *The design of the subdivision or the proposed improvements is not likely to cause substantial environmental damage or substantially and avoidably injure fish or wildlife or their habitat.*

The design of the subdivision and proposed improvements is not likely to cause substantial environmental damage or injure fish or wildlife or their habitat. Based on the Initial Study that has been prepared for the project, there are no environmental factors that cannot be mitigated to a level of less than significant. The Initial Study/Mitigated Negative Declaration lists mitigation measures for Biological Resources, regarding pre-construction surveys for sensitive species. As such, the project is not likely to cause substantial environmental damage or substantially and avoidably injure fish or wildlife or their habitat.

5) *The design of the subdivision or type of improvements is not likely to cause serious public health problems.*

The design of the subdivision and the type of improvements are not likely to cause any serious public health problems. An Air Quality Analysis and a Health Risk Assessment was prepared for project and the project will be required to comply with all local, state, and federal laws addressing air quality impacts. The memorandum found that the project would cause a less than significant impact to air quality and health risks. The nature of the residential use does not involve any substantial amounts of hazardous materials, and would not cause serious public health problems.

6) *The design of the subdivision or the type of improvements will not conflict with easements, acquired by the public at large, for access through or use of property within the proposed subdivision.*

The project will improve access in the immediate vicinity by installing public improvements such as sidewalks along Domestic Avenue and Pioneer Avenue. Additionally, public streets and pedestrian access will be provided throughout the project site. The design of the subdivision will not conflict with any easements on or through the proposed subdivision.

7) *That pursuant to Section 66474.4 of the Subdivision Map Act, the land is not subject to a contract entered into pursuant to the California Land Conservation Act of 1965 (commencing with section 51200 of the Government Code) and that the resulting parcels following a subdivision of the land would be too small to sustain their agricultural use.*

The subject property is not under a Williamson Act Contract pursuant to the California Land Conservation Act of 1965, and will not be detrimental or otherwise affect lands in agricultural use.

SECTION 2. The City Council of the City of Redlands hereby approves Commission Review & Approval No. 945 and related Inclusionary Housing Plan for the Project subject to the Conditions of Approval attached hereto as Exhibits "A," "B," and "C," and based upon the following findings:

1) *The site for the intended use is adequate in size and shape to accommodate the use, and all of the required yards, setbacks, walls or fences, landscaping and other features will adjust the use to those existing or permitted future uses of land in the neighborhood;*

The site is adequate in size and shape to accommodate the proposed use. The subject property will be developed with 117 residential lots, public and private open space and will provide the necessary on-site improvements including parking, landscaping, lighting, and utility connections. The project site complies with the applicable development standards as proposed by the Bergamot Specific Plan Amendment including requirements for setbacks, lot coverage and design. The proposed use will also be compatible with the surrounding uses such as the existing Bergamot Specific Plan and Citrus Valley High School located adjacent to the project site and will be consistent with the anticipated future residential development on parcels with residential land use designations in the immediate vicinity.

2) *The site for the proposed use relates to streets and highways which are properly designed and improved to carry the type and quantity of traffic generated or to be generated by the proposed use.*

The site is designed to carry the type and quantity of traffic generated by the proposed use. The site will provide new improved access from Domestic Avenue and Pioneer Avenue. These improvements are designed to carry the volume of residential traffic anticipated to be generated by the project and implement the project's portion of the roadways designated for the area by the General Plan as well as additional roadway necessary to facilitate required access.

3) *The conditions set forth in the approval and those shown on the approved site plan are deemed necessary to protect the public health, safety and general welfare.*

The conditions of approval for the project will protect the public health, safety and general welfare. The project has been conditioned to comply with the provisions of the Redlands Municipal Code.

SECTION 3. EFFECTIVE DATE. This Resolution shall become effective upon adoption.

ADOPTED, SIGNED AND APPROVED this 19th day of December, 2023.

Eddie Tejeda, Mayor

ATTEST:

Jeanne Donaldson, City Clerk

I, Jeanne Donaldson, City Clerk of the City of Redlands, do hereby certify that the foregoing Resolution was duly adopted by the City Council at a regular meeting thereof held on the 19th day of December, 2023, by the following vote:

AYES: Councilmembers Barich, Davis, Guzman-Lowery, Saucedo; Mayor Tejeda
NOES: None
ABSENT: None
ABSTAINED: None

Jeanne Donaldson, City Clerk

## EXHIBIT A

## DEVELOPMENT SERVICES DEPARTMENT
## CONDITIONS OF APPROVAL

1. This approval is for Tentative Tract Map No. 20528 and Commission Review and Approval No. 945 to subdivide 14.62 acres into 117 single family residential lots with 26 lettered lots for private alleys and drive aisles, nine lettered lots and the construction of 117 single-family motor court homes, located at the northeast corner of Interstate 210, and West Pioneer Avenue at 1160 West Pioneer Avenue from the boundaries of the Specific Plan (APNS: 0167-061-01-0000 and 0167-061-03-0000).

2. Unless construction has commenced pursuant to a building permit, or a time extension is granted in accordance with Code, this approval shall expire two (2) years from the date of City Council approval.

3. Any application(s) for an extension of time of the above expiration date shall be filed with the Planning Division not less than 90 days prior to the expiration date and shall comply with Title 17 (Subdivision Regulations) of the Redlands Municipal Code. Upon application by the subdivider prior to the expiration of the approved or conditionally approved tentative map, the tentative map shall be automatically extended in accordance with the Subdivision Map Act.

4. The issuance of any permits shall comply with all applicable provisions of the Redlands Municipal Code and Specific Plan No. 64.

5. All plans submitted to the City shall reflect the City Council approval and any other changes required by the City Council, Planning Commission and/or staff. This condition applies to the site plan, landscape plans, building elevations and materials, and all other illustrations, text, or plans submitted to the City in connection with this project.

6. No final inspection or Certificate of Occupancy shall be granted until all conditions of approval have been satisfied.

7. The applicant shall record the subdivision by a final tract map. No building permits shall be issued until a final tract map has been recorded.

8. The final map shall substantially conform to the tentative map as approved by the City Council.

9. Any conditions of approval determined by the City to not be completed prior to Final Map approval shall be included within the Subdivision Improvement Agreement entered into by the developer with the City.

10. The applicant for this permit, and its successors and assigns, shall defend, indemnify and hold harmless the City of Redlands, and its elected officials, officers, agents and employees, from and against any and all claims, actions, and proceedings to attack, set aside, void or annul the approval of this permit by the City, or brought against the City due to acts or omissions in any way connected to the applicant's project that is the subject of this permit. This indemnification shall include, but not be limited to, damages, fees, costs, liabilities, and expenses incurred in such actions or proceedings, including damages for the injury to property or persons, including death of a person, and any award of attorneys' fees. In the event any such action is commenced to attack, set aside, void or annul all, or any, provisions of this permit, or is commenced for any other reason against the City for acts or omissions relating to the applicant's project, within fourteen (14) City business days of the same, the applicant shall file with the City a performance bond or irrevocable letter of credit (together, the "Security") in a form satisfactory to the City and in the amount of Three Hundred Thousand Dollars ($300,000), to ensure applicant's performance of its defense and indemnity obligations under this condition. The failure of the applicant to provide the Security shall be deemed an express acknowledgement and agreement by the applicant that the City shall have the authority and right, without objection by the applicant, to revoke all entitlements granted for the project pursuant to this permit. The City shall have no liability to the applicant for the exercise of City's right to revoke this permit.

11. Pursuant to Government Code Section 66020(d), certain fees, dedications, reservations or exactions imposed by the City as a condition of approval of this project are subject to a statutory ninety (90) day protest period. Please be advised that the ninety (90) day protest period for those fees, dedications, reservations and exactions which are subject to Government Code Section 66020(a) has commenced to run on the date this project was approved by the City.

12. The applicant shall not make any modifications or changes during construction that are in conflict or contrary to the project's approved site design, or building elevations without first consulting with the Development Services Director or designee.

13. Common open space and recreational areas shall utilize durable materials and related protection devices to protect the area from vandalism by individuals or the use of skateboards.

14. A Home Owner's Association shall be established for the tract for maintenance of lettered lots and their related improvements.

15. Any slopes greater in height than three feet (3') shall be provided with irrigation systems and planted with groundcover, shrubs, and trees to prevent erosion, as approved by the Development Services Department and Municipal Utilities & Engineering Department.

16. All utilities on-site shall be placed underground, including utility vaults. Prior to approval of the final map the applicant shall bond for undergrounding of utilities, and submit plans

to be approved by the Development Services Director that detail undergrounding of all utilities found on-site. Bonds shall be calculated and included in any bonds required by the City of Redlands Municipal Utilities and Engineering Department.

17. A Minor Exception Permit shall be required for any wall or fence heights in excess six feet, and of wall or fence heights listed in Specific Plan No. 64.

18. In order to provide safe and efficient automated solid waste collection services the containers will need to be placed on the public streets A and B (curbside). Containers shall be placed in the street at the curb. Containers shall not be placed within three feet (3') from any obstacle, such as a parked vehicle, fence, lamp post, mailbox and at least one foot (1') from any other container. No trash services to be performed in an alley or access road.

19. No parking shall be permitted between the hours of 6am to 2:30pm on the day of collection services.

20. Prior to issuance of building permits for the project, the applicant and/or developer shall provide payment of In -lieu Fees in accordance with the approved Inclusionary Housing Plan provided with the application.

21. The applicant shall establish a Home Owners Association (HOA) for the care and maintenance of all property improvements held in common ownership of the subdivision. The HOA shall be formed for the property, and Conditions, Covenants and Restrictions (CC&R's) shall be prepared, submitted for review and approval by the City Attorney, **prior to approval of the Final Map**. The HOA and the CC&R's shall cover the care and maintenance of all property and improvements held in common ownership of the subdivision.

22. Prior to Final Tract Map clearance, the applicant shall submit one (1) copy of each of the final Articles of Incorporation, Bylaws of the Homeowners' Association, and Declaration of Covenants, Conditions, and Restrictions (CC&Rs) to the Planning Division for review and approval. After recordation of the final CC&Rs, two (2) copies of said recorded CC&Rs shall be submitted to the Planning Division.

23. Conditions, Covenants and Restrictions ("CC&Rs") shall be prepared by the applicant and approved by the City for the project. The CC&Rs shall contain the following:

    a. A provision which reads substantially as follows: "The City shall have the right to review and approve any proposed amendment or termination of [the CC&Rs] when such termination or amendment would alter, amend, terminate or otherwise impair the rights of the City under those provisions of [the CC&Rs] which satisfy the conditions of approval imposed by the City for the project. All proposed amendments shall be submitted to the City's Development Services Director and shall be approved in writing by the City Attorney as a precondition of and prior to

the recordation of such amendment."

b. A provision which reads substantially as follows: "[The CC&Rs] shall be covenants running with the land, and shall, in any event, and without regard to technical classification or designation, legal or otherwise, be, to the fullest extent permitted by law and equity, binding for the benefit and the favor of, and enforceable by the City of Redlands. Although the City of Redlands shall be a beneficiary of [the CC&Rs], and shall have a right to enforce [them], the City of Redlands shall not be obligated hereunder to exercise such rights of enforcement."

c. CC&Rs shall detail the ownership and maintenance requirements for Lots A through I, stating that the required open space areas for the project shall be owned and maintained by the Home Owners Association for the project in perpetuity.

d. The Conditional, Covenants, and Restrictions ("CC&R's") shall specify that individual trash service shall not occur upon an alley or private streets. Trash receptacles must be placed curbside upon the nearest local street. Further containers shall not be placed within three feet (3') of any obstacle, such as a parked vehicle, fence, lamp post, mailbox and at least one foot (1') from adjacent containers.

Mitigation Measures

24. Biological Resources Mitigation Measure 1 (BIO-1):

Pre-Construction Survey for Nesting Birds. Ground-disturbing activities shall be conducted during the non-breeding season for birds (approximately September 1 through January 31) to avoid violations of the Migratory Bird Treaty Act (MBTA) and California Fish and Game Code § § 3503, 3503.5 and 3513.

If grading or construction activities are scheduled to occur during the bird breeding season (February 1 through August 31), a pre-construction survey for nesting birds shall be conducted by a qualified Designated Biologist who is experienced in the identification of avian species and conduction nesting bird surveys using appropriate survey methodology. The nest survey shall include the project site and any adjacent areas (i.e., construction site entrances and/or staging areas) where the project activities have the potential to cause nest failure. The pre-construction survey shall be conducted no more than three days prior to the start of ground-disturbing activities within the bird breeding season at the appropriate time of day/night, and during appropriate weather conditions. If no nesting birds are observed during the survey, site preparation and construction activities may begin. If nesting birds are found to be present, avoidance or minimization measures shall be undertaken to avoid potential project-related impacts. If a nest is suspected, but not confirmed, the Designated Biologist shall establish a disturbance-free buffer until additional surveys can be completed, or until the location can be inferred based on observations confirm that a nest does not exist or is inactive. If a nest is observed, but

thought to be inactive, the Designated Biologist shall monitor the nest for one hour (four hours for raptors during the non-breeding season) prior to approaching the nest to determine status. The Designated Biologist shall use their best professional judgement regarding the monitoring period and whether approaching the nest is appropriate.

If an active avian nest is confirmed, the Designated Biologist shall immediately establish a conservative avoidance buffer surrounding the nest based on their best professional judgement and experience. The Designated Biologist shall monitor the nest at the onset of project activities, and at the onset of any changes in such project activities (e.g., increase in number or type of equipment, change in equipment usage, etc.) to determine the efficacy of the buffer. If the Designated Biologist determines that such project activities may be causing an adverse reaction, the Designated Biologist shall adjust the buffer accordingly or implement alternative avoidance and minimization measures, such as redirecting or rescheduling construction or erecting sound barriers. All work within these buffers will be halted until the nesting effort is finished (i.e., the juveniles are surviving independent from the nest). The on-site qualified biologist will review and verify compliance with these nesting avoidance buffers and will verify the nesting effort has finished. Work can resume within these avoidance areas when no other active nests are found. Upon completion of the survey and nesting bird monitoring, a report shall be prepared and submitted to the City for mitigation monitoring compliance record keeping.

25. Biological Resources Mitigation Measure 2 (BIO-2):

Pre-Construction Surveys for Burrowing Owl. The project applicant shall retain a qualified Biologist to perform a pre-construction burrowing owl survey to determine whether burrowing owls are present within 30 days prior to construction activities, according to the California Department of Fish and Wildlife (CDFW) 2012 guidelines. If construction is delayed or suspended for more than 30 days after the survey, the area shall be resurveyed. Survey for occupied burrows shall be completed within all construction areas and within 300 feet from the proposed project impact area (where possible and appropriate based on locations of barren or ruderal habitats).

If burrowing owls are detected during the pre-construction survey, the City shall consult with the CDFW and United States Fish and Wildlife Service (USFWS) to develop and implement a Burrowing Owl Mitigation Plan that includes mitigation measures outlined in CDFW (2012) guidelines and a Worker Environmental Awareness Program (WEAP).

26. Biological Resources Mitigation Measure 3 (BIO-3):

Pre-Construction Surveys for Special-Status Reptiles. Prior to the issuance of a grading permit, the project applicant shall provide evidence that a qualified designated biologist has been retained to perform a pre-construction survey of the entire project impact area, including any staging/laydown areas, for Southern California legless lizard and San Diegan tiger whiptail.

- If special-status reptiles are observed during construction activities, all work within 50 feet of the animal(s) will be stopped. At no time shall work occur within 50 feet of the animal without the Biological Monitor present. Any special-status wildlife species detected within the project impact area, including any staging/laydown areas, shall be allowed to move away on their own and shall not be captured or handled without authorization from the California Department of Fish and Wildlife (CDFW) or United States Fish and Wildlife Service (USFWS).

- Avoidance of Entrapment: To prevent inadvertent entrapment of special-status reptiles during construction, all excavated, steep-walled holes or trenches may need to be covered at the close of each working day with plywood or other suitable material or provided with one or more escape ramps constructed of earth fill or wooden planks. The project applicant shall retain a qualified biologist to regularly inspect open trenches during the construction phase.

- Environmentally Sensitive Area Fencing: Areas that support sensitive habitats or reptile species shall be temporarily fenced to protect them from construction activities and traffic. The project applicant may need to retain a qualified designated biologist to monitor Environmentally Sensitive Areas during the construction phase.

- Worker Environmental Awareness Program: A Worker Environmental Awareness Program (WEAP) training shall be implemented by a qualified designated biologist to educate construction workers about the presence of special-status plant and reptile species on and near the project site and shall be administered to construction personnel prior to the initiation of ground-disturbing or vegetation/habitat altering activities.

27. Cultural Resources Mitigation Measure 1 (CUL-1):

Native American Treatment Agreement. Prior to the issuance of grading permits, the applicant shall enter into a Tribal Monitoring Agreement with the Consulting Tribe[s] for the project. The Tribal Monitor shall be on-site during all ground-disturbing activities (including, but not limited to, clearing, grubbing, tree and bush removal, grading, trenching, fence post placement and removal, construction excavation, excavation for all utility and irrigation lines, and landscaping phases of any kind). The Tribal Monitor shall have the authority to temporarily divert, redirect, or halt the ground-disturbing activities to allow identification, evaluation, and potential recovery of cultural resources.

28. Cultural Resources Mitigation Measure 2 (CUL-2):

Retention of Archaeologist. Prior to any ground-disturbing activities (including, but not limited to, clearing, grubbing, tree and bush removal, grading, trenching, fence post

replacement and removal, construction excavation, excavation for all utility and irrigation lines, and landscaping phases of any kind), and prior to the issuance of grading permits, the Applicant shall retain a qualified archaeologist who meets the U.S. Secretary of the Interior Standards (SOI). The archaeologist shall be present during all ground-disturbing activities to identify any known or suspected archaeological and/or cultural resources. The archaeologist will conduct a Cultural Resource Sensitivity Training, in conjunction with the Tribe[s] Tribal Historic Preservation Officer (THPO), and/or designated Tribal Representative. The training session will focus on the archaeological and tribal cultural resources that may be encountered during ground-disturbing activities as well as the procedures to be followed in such an event.

29. Cultural Resources Mitigation Measure 3 (CUL-3):

Cultural Resource Management Plan. Prior to any ground-disturbing activities the project archaeologist shall develop a Cultural Resource Management Plan (CRMP) and/or Archaeological Monitoring and Treatment Plan (AMTP) to address the details, timing, and responsibilities of all archaeological and cultural resource activities that occur on the project site. This Plan shall be written in consultation with the Consulting Tribe[s] and shall include the following: approved Mitigation Measures (MM)/Conditions of Approval (COA), contact information for all pertinent parties, parties' responsibilities, procedures for each MM or COA, and an overview of the project schedule.

30. Cultural Resources Mitigation Measure 4 (CUL-4):

Pre-Grade Meeting. The retained qualified archeologist and Consulting Tribe[s] representative shall attend the pre-grade meeting with the grading contractors to explain and coordinate the requirements of the monitoring plan.

31. Cultural Resources Mitigation Measure 5 (CUL-5):

On-site Monitoring. During all ground-disturbing activities the qualified archaeologist and the Native American monitor shall be on-site full-time. The frequency of inspections shall depend on the rate of excavation, the materials excavated, and any discoveries of Tribal Cultural Resources as defined in California Public Resources Code Section 21074. Archaeological and Native American monitoring will be discontinued when the depth of grading and the soil conditions no longer retain the potential to contain cultural deposits. The qualified archaeologist, in consultation with the Native American monitor, shall be responsible for determining the duration and frequency of monitoring.

32. Cultural Resources Mitigation Measure 6 (CUL 6):

Inadvertent Discovery of Cultural Resources. In the event that previously unidentified cultural resources are unearthed during construction, the qualified archaeologist and the

Native American monitor shall have the authority to temporarily divert and/or temporarily halt ground disturbance operations in the area of discovery to allow for the evaluation of potentially significant cultural resources. Isolates and clearly non-significant deposits shall be minimally documented in the field and collected so the monitored grading can proceed.

If a potentially significant cultural resource(s) is discovered, work shall stop within a 60-foot perimeter of the discovery and an Environmentally Sensitive Area (ESA) physical demarcation/barrier constructed. All work shall be diverted away from the vicinity of the find, so that the find can be evaluated by the qualified archaeologist and Tribal Monitor[s]. The archaeologist shall notify the Lead Agency and consulting Tribe[s] of said discovery. The qualified archaeologist, in consultation with the Lead Agency, the consulting Tribe[s], and the Native American monitor, shall determine the significance of the discovered resource. A recommendation for the treatment and disposition of the Tribal Cultural Resource shall be made by the qualified archaeologist in consultation with the Tribe[s] and the Native American monitor[s] and be submitted to the Lead Agency for review and approval. Below are the possible treatments and dispositions of significant cultural resources in order of CEQA preference:

A. Full avoidance.

B. If avoidance is not feasible, Preservation in place.

C. If Preservation in place is not feasible, all items shall be reburied in an area away from any future impacts and reside in a permanent conservation easement or Deed Restriction.

D. If all other options are proven to be infeasible, data recovery through excavation and then curation in a Curation Facility that meets the Federal Curation Standards (CFR 79.1)

33. Cultural Resources Mitigation Measure 7 (CUL 7):

Inadvertent Discovery of Human Remains. Consulting Tribe[s] request the following specific conditions to be imposed in order to protect Native American human remains and/or cremations. No photographs are to be taken except by the coroner, with written approval by the consulting Tribe[s].

A. Should human remains and/or cremations be encountered on the surface or during any and all ground-disturbing activities (i.e., clearing, grubbing, tree and bush removal, grading, trenching, fence post placement and removal, construction excavation, excavation for all water supply, electrical, and irrigation lines, and landscaping phases of any kind), work in the immediate vicinity of the discovery shall immediately stop within a 100-foot perimeter of the discovery. The area shall be protected; project personnel/observers will be restricted. The County

Coroner is to be contacted within 24 hours of discovery. The County Coroner has 48 hours to make his/her determination pursuant to State and Safety Code §7050.5. and Public Resources Code (PRC) § 5097.98.

B. In the event that the human remains and/or cremations are identified as Native American, the Coroner shall notify the Native American Heritage Commission within 24 hours of determination pursuant to subdivision (c) of HSC §7050.5.

C. The Native American Heritage Commission shall immediately notify the person or persons it believes to be the Most Likely Descendant (MLD). The MLD has 48 hours, upon being granted access to the Project site, to inspect the site of discovery and make his/her recommendation for final treatment and disposition, with appropriate dignity, of the remains and all associated grave goods pursuant to PRC §5097.98.

D. If the Consulting Tribe(s) has been named the Most Likely Descendant (MLD), the Tribe may wish to rebury the human remains and/or cremation and sacred items in their place of discovery with no further disturbance where they will reside in perpetuity. The place(s) of reburial will not be disclosed by any party and is exempt from the California Public Records Act (California Government Code § 6254[r]). Reburial location of human remains and/or cremations will be determined by the Tribe's Most Likely Descendant (MLD), the landowner, and the City Planning Department.

34. Hazards and Hazardous Materials Mitigation Measure 1 (HAZ-1):

Soil Management Plan. Prior to issuance of a grading permit, a Soil Management Plan (SMP) shall be prepared by a qualified environmental professional with Phase II/Site Characterization experience. The SMP shall be approved by the City and made available by the project Applicant to the contractor and the City Engineer for use during grading activities. The SMP shall include guidelines for safety measures and soil management in the event that soils are to be disturbed, and for handling soil during any planned earthwork activities. The SMP shall also include a decision framework and specific risk management measures for managing soil, including any soil import/export activities, in a manner protective of human health and consistent with applicable regulatory requirements.

As part of this SMP, all excavation activities shall be documented daily using digital photography. In addition, the sides and the bottom of the excavation areas of concern shall be appropriately logged on scaled paper. Observed materials, including an estimate of the quantity observed, and PID and dust monitor readings shall be recorded on the Daily Field Record and/or the Direct Reading Log.

If the results of the stockpile samples show no contamination, or detected concentrations of chemicals within acceptable regulatory limits for residential uses, then the soil may be redistributed within the excavation. If soil is deemed contaminated, then it shall be disposed of off-site at an approved landfill facility. Should any soils be imported or exported at an off-site location, a Phase II/Site Characterization Specialist shall verify that all imported/exported soils are not contaminated with hazardous materials above regulatory thresholds. If import/export soils are determined to be contaminated above regulatory thresholds, the Phase II/Site Characterization Specialist would recommend proper handling, use, and/or disposal of these soils.

35. Hazards Mitigation Measure 2 (HAZ-2):

Removal of Organochloride Pesticides (OCP) Contaminated Soils. Prior to site grading activities, the project Applicant shall submit documentation as proof, to the City Engineer, that the OCP-impacted soils at the project site have been excavated and disposed of at a licensed facility with confirmation sampling to show that all remaining soil OCP concentrations are below applicable regulatory screening thresholds for residential uses. The excavation, transport, and disposal of all OCP-impacted soils from the project site shall occur in accordance with applicable Federal, State, and/or local regulations. In no event shall the project Applicant proceed with site grading activities at any location on the site where OCP contamination is found to be present above regulatory thresholds for residential use.

36. Transportation Mitigation Measure 1 (TR-1):

Traffic Management Plan. Prior to issuance of grading permits, the project applicant shall prepare a Traffic Management Plan (TMP) for approval by the City of Redlands Traffic Engineer. The TMP shall include measures to minimize potential safety impacts during the short-term construction process if partial or full lane closures are required. The TMP shall specify that one direction of travel in each direction on adjacent roadways (West Pioneer Avenue and West Domestic Avenue) must always be maintained during project construction activities. If full lane closures are required and one direction of travel in each direction cannot be maintained, the TMP shall identify planned detours. The TMP shall include measures such as construction signage, limitations on timing for lane closures to avoid peak hours, temporary striping plans, and use of construction flagperson(s) to direct traffic during heavy equipment use. The TMP shall be incorporated into project specifications for verification prior to final plan approval.

Other Departments/Divisions

37. Conditions of Approval from the following City Departments/Divisions are applicable to the project, and are hereby incorporated by reference:

    a. Land Use Engineering Division (Exhibit B)
    b. Fire Department (Exhibit C)

**EXHIBIT B**
Land Use Engineering Division
Conditions of Approval

[ Attached ]

# Exhibit B

**REDLANDS DEVELOPMENT SERVICES DEPARTMENT**
**LAND USE ENGINEERING**
**DEVELOPMENT REQUIREMENTS**
**TENTATIVE TRACT NO. 20528 AND**
**COMMISSION REVIEW AND APPROVAL NO. 945**

| | |
|---|---|
| **Date of P.C. Meeting:** | **November 14, 2023** |
| **Applicant:** | **MLC Holdings, Inc.** |
| **Location:** | **Northwest Corner Tennessee Street and West Pioneer Avenue** |
| **Project Description:** | **Subdivide Approximately 14.6 Acres into 117 Single Family Lots and 9 Lettered Lots** |

The applicant shall comply with the following engineering requirements to allow for the orderly development of the surrounding area and for public health and safety.

All requirements for development shall be consistent with requirements set forth in the General Plan; applicable sections of Redlands Municipal Code; latest edition of "Redlands Standard Specifications and Detail Drawings for Design and Construction of Public Improvements"; latest edition of American Public Works Association "Standard Plans for Public Works" and "Standard Specifications for Public Works Construction – Greenbook"; latest edition of "Redlands Water Systems Standard Specifications"; latest edition of "Redlands Sanitary Sewer Systems Standard Specifications"; and current Redlands policies and guidelines relative to development projects.

**A. The following items are required prior to issuance of the GRADING PERMIT.**

1. Pay plan check fee as established per resolution. The amount will be determined at plan check submittal.

2. Plans required to be submitted include:
   a. Precise Grading Plan. Grading plans shall be coordinated with the existing and proposed off-site improvements. (RMC 15.04)
   b. SWPPP/Erosion Control Plan. Erosion/Sediment Control Plan shall be submitted for review and approval. A copy of the project's Storm Water Pollution Prevention Plan (SWPPP) shall be submitted for review. SWPPP Best Management Practices (BMPs) to prevent and control discharges to the municipal separate storm sewer (drain) system shall be in effect for the entire duration of project construction to its completion and acceptance by the City. (RMC 13.54)
   c. Water Quality Management Plan. Submit final Water Quality Management Plan (WQMP) for review and approval. WQMP shall consist of post construction Best Management Practices (BMPs) prepared in accordance with the requirements and guidelines of the San Bernardino County Stormwater Program. The requirements of the WQMP shall remain in effect throughout the life of the project. (California State Order No. R8-2010-0036)

   All plans used as reference for design shall be listed on title sheet of all plans with reference numbers. All plans shall be submitted on 24" x 36" size sheets. Six (6)

copies of each are required. After final review, grading and SWPPP plans shall be submitted on 24" x 36" size, min. 4 mil, mylar sheets for City's approval.

3. Submission of plan sets shall be complete and include all required engineering designs and drawings listed in No. 2 above. All plans submitted shall be substantially complete, and no plan check queue place-holder plans will be accepted. An incomplete plan submittal will not be accepted for plan check.

4. All support documentation shall be submitted with the plans to be checked. Submission shall include:
   a. Hydrology Report and Hydrologic Calculations; (RMC 17.07.030)
   b. Geotechnical Report; (RMC 17.07.040)
   c. Easement Documents. (RMC 17.09.050)

5. A final WQMP that is in substantial conformance with the preliminary WQMP and in full conformance with the WQMP Guidance Document shall be submitted and approved prior to the approval of precise grading plans.

6. Cash cleanup deposit shall be submitted ($3,000.00). Deposit will be reimbursed after the work is completed and accepted by the City upon written request. (RMC 12.16.290)

7. Truck route permit is required for all construction vehicles 5 tons and over gross vehicular weight (e.g. concrete trucks) using streets other than established truck routes. (RMC 10.54)

   **NOTE:** Cash cleanup deposit and truck route permit submitted during the grading process could be transferred to be used during building construction or off-site improvement construction if it is within the time limit specified in the truck route permit, otherwise a new truck route permit must be issued.

8. For all development requiring coverage under the state of California General Storm Water Permit, in effect at the time of permit issuance, and whom have filed with the State Board a Notice of Intent (NOI), a copy of the Waste Discharge Identification Number (WDID) and NOI shall be submitted for review and file. Call (866) 563-3107. (RMC 13.54)

9. The Final WQMP shall also include a site trash plan detailing the installation, operation, and maintenance of a Full Capture System (FCS) for loose trash. The intent of the FCS is to capture loose trash preventing the trash from entering the site storm drains and basins. BMPs or devices used as FCS devices shall require acceptance by the City Engineer. Full Capture Systems are defined as treatment controls (either a single device or a series of devices) capable of trapping all particles 5 mm or greater. In addition, the FCS shall trap trash from the greater of:

a. A flow not less than the peak flow rate, Q, resulting from a one-year, one-hour, storm. Precipitation intensity shall be determined using the NOAA ATLAS 14 Point Precipitation Frequency Estimates web site; or
b. A flow rate equal to the on-site storm water conveyance system including pipes, channels, and swales.

**B. The following items are required prior to RECORDATION OF TRACT MAP.**

1. Pay plan check fee as established per resolution. The amount will be determined at plan check submittal. (City Resolution No. 7671)

2. Plans required to be submitted shall include (RMC 17.17.060):
   a. Tract Map;
   b. Street Improvement;
   c. Storm Drain Construction;
   d. Pavement Striping and Signage Plans (including reflectorized pavement markers);
   e. Street Tree Installation – Street trees shall be provided as per the approved
   f. Streetlight Installation – Provide street lighting plan which show approved locations of service pedestal(s), conduits, street lights, appurtenances, and any necessary detail by Southern California Edison Company;
   g. Potable Water Main Installation;
   h. Recycled Water Main Installation;
   i. Sewer Main Installation; and
   j. Approved Onsite Potable and Irrigation Water Line Installation.

   All plans used as reference for design shall be listed on title sheet of all plans with reference numbers. All plans shall be submitted on 24" x 36" size sheets. Three (3) copies of each are required. After final review, plans shall be submitted on 24" x 36" size, min. 4 mil, mylar sheets for City's approval.

3. Submission of plan sets shall be complete and include all required engineering designs and drawings listed in No. 2 above. All plans submitted shall be substantially complete, and no plan check queue place-holder plans will be accepted. An incomplete plan submittal will not be accepted for plan check.

4. All support documentation shall be submitted with the plans to be checked. Submission shall include (RMC 17.09.060):
   a. Title Reports and backup documents for the property;
   b. All record maps and deeds referenced on the Tract/Parcel Map;
   c. Easement Documents;
   d. Boundary and Lot Closure Calculations; and
   e. Record plans, maps and documents.

5. Finalize and obtain all necessary onsite and offsite permissions, permits, easements, right-of-way, and properties in order to satisfy the conditions of approval for this project. Such items may include:
   a. Encroachment Permits from Caltrans and other agencies.

6. Pay the required development impact fees per ordinance in effect at time of approval of Final Tract Map. The exact amount will be determined based upon the review of the final building plans and project information. Development Impact Fees shall include;
   - Water Source Acquisition Charge (RMC 13.40);
   - Water/Sewer/Recycled Water Frontage Charges; (RMC 13.44 and 13.12) and
   - Remaining Development Impact Fees will be due at time of building permit issuance or water meter installation (RMC 13.48.030 and Redlands Ordinance No. 2830).

7. All off-site improvements shall be designed by a Civil Engineer licensed in the State of California. All existing utilities shall be pot-holed to determine the actual depth if no signed plan is available. Field notes will be submitted at time of submitting the plan for review and plan checking (RMC 17.17.060).

8. The approximate locations of existing underground utilities shall be shown on the improvement/site/grading plans. The utilities shall be plotted from record and field data. The City of Redlands and the design Engineer assume no liability as to the exact location of said lines where locations are not shown.

9. Submission of approved onsite potable and irrigations plans is required prior to connection to recycled water system. All onsite improvements shall be done in accordance with the Water Resources Control Board, Division of Drinking Water requirements for recycled water. City shall submit plans to Division of Drinking Water for approval prior to final approval and installation of irrigation meters.

10. Final City approved mylars for all public improvements shall be on file with the Municipal Utilities and Engineering Department.

11. Requirements for Pioneer Avenue (RMC 17.15 and 17.17):

    a. Construct standard curb and gutter 21 feet north side of street centerline;
    b. Provide full depth construction/reconstruction consistent with the City standard or alternative method of street rehabilitation as accepted by the City Engineer between the new curb and gutter to the street centerline verified through a geotechnical report;
    c. Construct standard property line adjacent sidewalk along the entire street frontage and ramps at all curb returns;
    d. Install LED ornamental streetlight(s) with the equivalent illumination of a 100 watt sodium vapor street light. Streetlight spacing shall be determined by the City of Redlands design specifications. Location of the light(s) will

be determined at time of plan preparation. Coordinate with City staff for guidance. Prepare and submit a separate street lighting plan for City approval;

e. Provide street trees avoiding sewer and water laterals. Prepare and submit a separate street tree plan for City approval;

f. Construct pavement transitions based on design speed of the street to accommodate an east bound left turn into Street "A" and west bound due to the narrowing of the street from Citrus Valley High School to the satisfaction of the City Engineer (Note: these transitions may require reconstruction and widening on the south side of San Bernardino Avenue);

g. Construct underwalk drain, if necessary;

h. Use traffic index of 6.0;

i. Install a minimum 8 inch diameter recycled water main including necessary valves and appurtenances and accepted by the City engineer; and

j. Install residential fire hydrants as required by the Redlands Fire Department.

12. Requirements for Domestic Avenue (RMC 17.15 and 17.17):

a. On the south side of Domestic Avenue dedicate to provide for a 30 foot half street right-of-way width including a corner cutoff at the property line return to accommodate a 30 foot radius curb return and pedestrian ramp;

b. Construct standard curb and gutter 20 feet south side of street centerline;

c. Construction standard right angle turn from Domestic Avenue to Street "B".

d. Provide full depth construction/reconstruction consistent with the City standard or alternative method of street rehabilitation as accepted by the City Engineer between the curb and gutter to the street centerline verified through a geotechnical report abd to the satisfaction of the City Engineer;

e. Construct standard property line adjacent sidewalk along the entire street frontage and ramps at all curb returns;

f. Install LED ornamental streetlight(s) with the equivalent illumination of a 100 watt sodium vapor street light. Streetlight spacing shall be determined by the City of Redlands design specifications. Location of the light(s) will be determined at time of plan preparation. Coordinate with City staff for guidance. Prepare and submit a separate street lighting plan for City approval;

g. Provide street trees avoiding sewer and water laterals. Prepare and submit a separate street tree plan for City approval.

h. Construct standard cul-de-sac at street terminus;

i. Construct underwalk drain, if necessary;

j. Use traffic index of 6.0;

k. Install a minimum 12 inch diameter potable water main including necessary valves and appurtenances;

l. Install a minimum 8 inch diameter recycled water main including necessary valves and appurtenances; and

m. Install residential fire hydrants as required by the Redlands Fire Department.

13. Requirements for Street "A" from Pioneer Avenue to Street "B" (RMC 17.15 and 17.17):

a. Dedicate to provide for a 64 foot street right-of-way width including a corner cutoff at the property line return to accommodate a 30 foot radius curb return and pedestrian ramp;
b. Construct standard curb and gutter 20 feet each side of street centerline;
c. Provide full depth construction/reconstruction consistent with the City standard or alternative method of street rehabilitation as accepted by the City Engineer between the new curb and gutter to the street centerline verified through a geotechnical report;
d. Construct standard property line adjacent sidewalk along the entire street frontage and ramps at all curb returns;
e. Install LED ornamental streetlight(s) with the equivalent illumination of a 100 watt sodium vapor street light. Streetlight spacing shall be determined by the City of Redlands design specifications. Location of the light(s) will be determined at time of plan preparation. Coordinate with City staff for guidance. Prepare and submit a separate streetlighting plan for City approval;
f. Provide street trees avoiding sewer and water laterals. Prepare and submit a separate street tree plan for City approval.
g. Construct underwalk drain, if necessary;
h. Use traffic index of 6.0;
i. Install a minimum 12 inch diameter potable water main including necessary valves and appurtenances;
j. Install a minimum 8 inch diameter recycled water main including necessary valves and appurtenances;
k. Install residential fire hydrants as required by the Redlands Fire Department; and
l. Install a minimum 8 inch diameter sewer main with manholes and appurtenances.

14. Requirements for Street "A" from Street "B" to Terminus (RMC 17.15 and 17.17):

a. Dedicate to provide for a 60 foot street right-of-way width including a corner cutoff at the property line return to accommodate a 30 foot radius curb return and pedestrian ramp;
b. Construct standard curb and gutter 20 feet each side of street centerline;
c. Provide full depth construction/reconstruction consistent with the City standard or alternative method of street rehabilitation as accepted by the City Engineer between the new curb and gutter to the street centerline verified through a geotechnical report;

d. Construct standard property line adjacent sidewalk along the entire street frontage and ramps at all curb returns;
e. Install LED ornamental streetlight(s) with the equivalent illumination of a 100 watt sodium vapor street light. Streetlight spacing shall be determined by the City of Redlands design specifications. Location of the light(s) will be determined at time of plan preparation. Coordinate with City staff for guidance. Prepare and submit a separate streetlighting plan for City approval;
f. Provide street trees avoiding sewer and water laterals. Prepare and submit a separate street tree plan for City approval.
g. Construct standard cul-de-sac at street terminus;
h. Construct underwalk drain, if necessary;
i. Use traffic index of 5.0;
j. Install a minimum 8 inch diameter potable water main including necessary valves and appurtenances;
k. Install residential fire hydrants as required by the Redlands Fire Department; and
l. Install a minimum 8 inch diameter sewer main with manholes and appurtenances.

15. Requirements for Street "B" (RMC 17.15 and 17.17):

a. Dedicate to provide for a 64 foot street right-of-way width including a corner cutoff at the property line return to accommodate a 30 foot radius curb return and pedestrian ramp;
b. Construct standard curb and gutter 20 feet each side of street centerline;
c. Provide full depth construction/reconstruction consistent with the City standard or alternative method of street rehabilitation as accepted by the City Engineer between the new curb and gutter to the street centerline verified through a geotechnical report;
d. Construct standard property line adjacent sidewalk along the entire street frontage and ramps at all curb returns;
e. Install LED ornamental streetlight(s) with the equivalent illumination of a 100 watt sodium vapor street light. Streetlight spacing shall be determined by the City of Redlands design specifications. Location of the light(s) will be determined at time of plan preparation. Coordinate with City staff for guidance. Prepare and submit a separate streetlighting plan for City approval;
f. Provide street trees avoiding sewer and water laterals. Prepare and submit a separate street tree plan for City approval.
g. Construct underwalk drain, if necessary;
h. Use traffic index of 6.0;
i. Install a minimum 12 inch diameter potable water main including necessary valves and appurtenances;
j. Install a minimum 8 inch diameter recycled water main including necessary valves and appurtenances;

k. Install residential fire hydrants as required by the Redlands Fire Department; and
l. Install a minimum 8 inch diameter sewer main with manholes and appurtenances.

16. Requirements for Motor Courts (RMC 17.15 and 17.17):

a. Dedicate to the City of Redlands a 30 foot wide water and sewer easement as accepted by the City Engineer;
b. Construct a 4 foot wide rolled curb and gutter in substantial conformance to the approved tentative tract map and as accepted by the City Engineer;
c. Provide full depth street construction as accepted by the City Engineer verified through a geotechnical report;
d. Use traffic index of 5.0;
e. Install a minimum 8 inch diameter potable water main including necessary valves and appurtenances;
f. Install residential fire hydrants as required by the Redlands Fire Department; and
g. Install a minimum 8 inch diameter sewer main with manholes and appurtenances.

17. Provide for adequate drainage facilities. The applicant shall provide and submit all necessary hydrology/hydraulic studies and calculations in accordance with the San Bernardino County Hydrology Manual (RMC 17.17).

18. Conditions, Covenants and Restrictions ("CC&Rs") shall be prepared by the applicant and approved by the City for the project which address cross lot drainage, Water Quality Management Plan requirements, sewer usage, water service, and solid waste disposal, which are shared by the property owners. The CC&Rs shall contain the following:

a. A provision which reads substantially as follows: "The City shall have the right to review and approve any proposed amendment or termination of [the CC&Rs] when such termination or amendment would alter, amend, terminate or otherwise impair the rights of the City under those provisions of [the CC&Rs] which satisfy the conditions of approval imposed by the City for the project. All proposed amendments shall be submitted to the City's Development Services Director and shall be approved in writing by the City Attorney as a precondition of and prior to the recordation of such amendment."

b. A provision which reads substantially as follows: "[The CC&Rs] shall be covenants running with the land, and shall, in any event, and without regard to technical classification or designation, legal or otherwise, be, to the fullest extent permitted by law and equity, binding for the benefit and the favor of, and enforceable by the City of Redlands. Although the City of Redlands shall be a beneficiary of [the CC&Rs], and shall have a right

to enforce [them], the City of Redlands shall not be obligated hereunder to exercise such rights of enforcement."

19. The CC&Rs shall be subject to a joint review by the all affected City Department Directors and the City Attorney's Office. The applicant shall be required to pay for the review of the CC&Rs by the affected Department Directors and the City Attorney's Office at such persons' hourly billing rates.

20. The CC&Rs shall be submitted to the City at least thirty (30) days prior to the submission of any request for approval of the final map. The CC&Rs shall subsequently be recorded, in the form approved by the City, prior to or at the same time as the final map.

21. As a condition of and prior to the final tract map approval, the applicant shall (1) petition the City for annexation of the property comprising Tentative Tract Map No. 20528 to the City's Community Facilities District No. 2004-1, or a similar City community facilities district, as designed by the City; (2) take actions reasonable or necessary to annex such property to community facilities district; and (3) pay the reasonable and actual costs incurred by the City in annexing the property to the community facilities district; all for the purpose of maintenance of street trees and trails in the public right-of-ways and easements. (California Community Facilities Act)

22. All irrigation lines that exist within any street right-of-way shall be replaced with ductile iron, cement mortar lined and coated steel, or as approved by City Engineer. (RMC 17.17.020)

23. All off-site utilities shall be placed underground. The undergrounding shall include power poles located along the project site's street frontage(s) and may include power poles beyond the site's boundary as determined by Southern California Edison. Those overhead utility lines that are 66KV or greater will not be required to be undergrounded. Any power pole(s) that contain a streetlight will be required to install a standard streetlight, in accordance with the Municipal Utilities and Engineering Department's standards. Plans shall be submitted that detail the undergrounding of all off-site utilities, subject to review and approval by the City Engineer. (RMC 17.17.020)

24. Construct a 10 foot wide minimum Community Trails/Bike Trail across lettered lot "F" within the development. Dedicate a minimum 11 foot public access easement for all trails within the development located outside of street right-of-way. (RMC 17.17.020)

25. Install reduced pressure principle backflow devices as required by City Engineer. (RMC 13.20)

26. Install onsite fire line with double detector check valve backflow devices at service connection satisfactory to the City Fire Department. (RMC 13.20)

27. Improvement bonds must be posted for the total estimated cost of off-site improvements as follows (RMC 17.17.080):

| | |
|---|---|
| Performance | 100% security (due prior to final map approval) |
| (Warranty) | 10% security (due at time of acceptance of improvements) |
| Labor and Materials | 50% security (due prior to final map approval) |

Acceptable security forms: Surety Bond(s), Letter of Credit from a qualified bank or institution, Cash Deposits, or Set Aside Letter (savings account) in City's name subject to approval of the City Attorney and Finance Director.

28. Survey and Monumentation cash bond must be posted.

29. The 10% warranty security will be retained for one year after acceptance of public improvements by the City for warranty of off-site work.

30. Execute Subdivision Improvement Agreement (RMC 17.17.070).

**C. The following items are required prior to issuance of the BUILDING PERMIT**

1. Pay plan check fee as established per resolution. The amount is to be determined at plan check submittal. (City Resolution No. 7671)

2. Provide pad certification and compaction report to the Building and Safety Department.

3. Pay the required development impact fees per ordinance in effect at time of issuing the building permit. The exact amount will be determined based upon the review of the final building plan or project information. Development Impact Fees shall include:
   - Transportation Facilities; (RMC 3.54)
   - Fire Facilities; (RMC 3.60)
   - General Government Facilities; (RMC 3.60)
   - Library Facilities; (RMC 3.60)
   - Open Space/Park; (RMC 3.32)
   - Police Facilities; (RMC 3.60)
   - Storm Drain Facilities; (RMC 3.56)
   - Water Capital Improvement Charge; (RMC 3.48)
   - Recycled Water Capital Improvement Charge; (RMC 3.53)
   - Water Source Acquisition Charge*; (RMC 13.40)
   - Sewer Capital Improvement Charge; (RMC 3.44)
   - Solid Waste Capital Improvement Charge; (RMC 3.70) and
   - Sewer Frontage Charges*. (RMC 13.44)

* These charges are required for building permit issuance if Final or Parcel Map was not required for the project or charges were not paid with the Final or Parcel Map approval.

4. Although this project will have an on-going inspection throughout construction, a final inspection for all off-site improvements must be scheduled by developer to certify that these improvements comply with City specifications. (RMC 12.16.090)

5. Provide for adequate drainage facilities, including any necessary under sidewalk drains. (RMC 17.17)

6. Comply with City of Redlands Landscape Ordinance No. 2724 and submit a landscape/irrigation plan prepared by a licensed landscape architect for review and approval. The irrigation system shall be designed and constructed to make use of future recycled and/or recycled water system.

7. Submit recycling plans for site demolition/construction for review and approval in accordance with Chapter 13.66 of the Redlands Municipal Code.

8. Tract map shall be recorded and proof of recordation provided.

**D. The following items are required prior to approval of APPLICATION FOR WATER SERVICE CONNECTION and prior to WATER METER INSTALLATION.**

1. Pay the Water Capital Improvement Charge; (RMC 3.48.030)

2. Pay the Recycled Water Capital Improvement Charge; (RMC 3.53.050)

3. Pay the Water Meter Charge. (Redlands Ordinance No. 2830)

**E. The following items are required prior to issuance of the ENCROACHMENT PERMIT.**

1. Cash cleanup deposit shall be submitted ($3000.00). Deposit will be reimbursed after the work is completed and accepted by the City upon written request. (Required unless previously submitted under Sections A, B or C.) (RMC 12.16.290)

2. Truck route permit is required for all construction vehicles 5 tons and over gross vehicular weight (e.g. concrete trucks) using streets other than established truck routes. (RMC 10.54)

3. Section 4216/4217 of the Government Code requires a Dig Alert Identification Number be issued before a "Permit to Excavate" will be valid. For your Dig Alert

Identification Number, call Underground Service Alert toll free, 1-800-227-2600, two (2) working days prior to conducting any excavation. (RMC 12.20.120)

4. Encroachment Permit application and two (2) sets of City approved plans must be submitted for all off-site improvements. Encroachment Permit fees shall be paid prior to issuance of Encroachment Permit. (RMC 12.16.010)

5. A California OSHA Permit Number for all work that is 5 feet deep or deeper shall be provided. Call (909)383-4321. (RMC 12.16.040)

6. A copy of soils report is required with recommendation for the final pavement structural section to be submitted prior to placing of the street pavement. The report shall include test results and boring/sampling locations.

7. A traffic control plan shall be prepared in accordance with the latest revision of CA MUTCD or W.A.T.C.H. manual, submitted and accepted by the City Engineer prior to issuance of an encroachment permit. The plan shall show all required construction signage, warning devices, road closures, detours, delineation, phasing schedules and anticipated durations of closures and detours for any work within the public right-of-way. The plans shall provide names and 24-hour phone numbers of individuals who can be contacted regarding traffic control measures.

8. Improvement bonds must be posted for the total estimated cost of off-site improvements as follows:

| | |
|---|---|
| Performance | 100% security (due prior to final map approval) |
| (Warranty) | 10% security (due at time of acceptance of improvements) |
| Labor and Materials | 50% security (due prior to final map approval) |

Acceptable security forms: Surety Bond(s), Letter of Credit from a qualified bank or institution, Cash Deposits, or Set Aside Letter (savings account) in City's name subject to approval of the City Attorney and Finance Director.

9. Execute Subdivision Improvement Agreement. (RMC 17.17.070).

10. The 10% warranty security will be retained for one year after acceptance of public improvements by the City for warranty of off-site work.

**F. The following items are required prior to issuance of CERTIFICATE OF OCCUPANCY.**

1. All requirements as described in Sections A, B, C, D and E of these conditions of approval shall be met.

2. All work shall be completed to the satisfaction of the City Engineer. All as-built plans shall be delivered to the Municipal Utilities and Engineering Department for review and approval.

3. The Engineer of Record shall file a Final Certification for all grading and improvements relating to the project development.

4. Owner's Licensed Land Surveyor shall reset survey points, monuments, record corners, and centerline ties that were destroyed during construction and shall file Corner Records for those points prior to completion of the project with San Bernardino County Surveyor. Copies of information shall be furnished to the Municipal Utilities and Engineering Department. [California B&P Code 8762, 8767, 8768, 8771, and 8773(b)]

5. One mylar copy of recorded tract map shall be furnished to the Municipal Utilities and Engineering Department.

6. A list of as-built infrastructure improvement quantities shall be provided in the Excel format provided by the City showing quantities for each street segment (i.e. pavement, curb and gutter, sidewalk, etc.)

7. Streets may be required to have a seal coat applied at the option of the City Engineer. Type of seal coat is to be determined by the City Engineer.

8. Resurface existing roadway as directed by the City Engineer due to utility installations and construction damage.

9. Existing striping shall be removed and replaced as necessary. New striping and pavement markings shall be installed as required by the City Engineer.

10. Contractors will be required to pave new streets in two (2) phases with last phase being delayed until 95 percent of construction has been completed, or on approval of the City Engineer.

11. Owner/Developer shall provide recycling receipts as required by the recycling plan.

**G. The following items are required prior to release of SECURITIES/WARRANTIES/DEPOSITS.**

1. Prior to the release of the securities for the project, all improvements shall be reviewed and accepted by the City Engineer.

2. A recorded mylar copy of the tract map shall be submitted, if a part of a lot-sale subdivision and not included in Item E.

3. Tie sheets shall be submitted for all monuments found and/or set in the public right-of-way.

4. The release of securities/warranties/deposits must be requested in writing to the City Engineer. Allow 30 days for processing.

**DONALD YOUNG, P.E., P.M.P.**
One Stop Permit Center Manager

Initial

**EXHIBIT C**
Fire Department
Conditions of Approval

[ Attached ]

# Exhibit C

City of

# REDLANDS

Incorporated 1888
City of Redlands
35 Cajon Street, Suite 12, Redlands, CA 92373

FIRE DEPARTMENT

COMMUNITY RISK REDUCTION DIVISION

November 2, 2023

Subject: TTM 20528 – Fire Department Conditions

Fire Department Conditions

1. Street A Dead End Turnaround provisions for Fire Apparatus

   No curbside parking shall be permitted in the cul-de-sac of "Street A" and driveways 'AE' and 'AF' shall be constructed to support a 75,000 lb fire apparatus. This can be finalized during the grading plan review and permit process.

2. Fire Hydrant Location Corner of Street B

   Proposed hydrant shall be relocated to southwest corner of "Street B".

3. Fire Access Plan

   Prior to recordation of the final map and/or grading permit issuance, the applicant shall provide a Fire Access Plan for review and approval by the Redlands Fire Department.

Vince Anderson | Fire Marshal
Redlands Fire Department
**Phone** 909.798.7601
**Email** vanderson@cityofredlands.org
35 Cajon St, Ste. 12 Redlands, CA 92373

**City Council/Financing Authority Meeting** **I. 6.**

**DATE:** 09/16/2025

**TO:** Honorable Mayor and City Council Members

**SUBJECT:** Adopt Resolution No. 8714 for Street Vacation No. 197, a request to vacate a small portion of Ramona Drive, consisting of approximately 77 linear feet (1,200 square-feet) of public right-of-way, located adjacent to the property at 1300 Prospect Drive. The subject portion of right-of-way is located at the southeast corner of 1300 Prospect Drive (APN: 0174-012-07-0000). This proposal qualifies for exemption from environmental review pursuant to Section 15061(b)(3) of the California Environmental Quality Act Guidelines (Development Services Director Desatnik)

---

**MOTION(S):**

If the City Council determines that staff's recommendation is appropriate, the following motions are provided:

1. I move that the City Council determine that adoption of Resolution No. 8714 is exempt from environmental review pursuant to Section 15061(b)(3) of the State's guidelines implementing the California Environmental Quality Act; and

2. I move to adopt Resolution No. 8714 and approve Street Vacation No. 197.

**RECOMMENDATION:**

On July 22, 2025, the Planning Commission determined the proposed Street Vacation would be in conformance with the 2035 General Plan and recommended that the City Council approve Street Vacation No. 197.

**DISCUSSION:**

The applicant, Sajid A. Ahmed, has filed an application for Street Vacation No. 197 to vacate an excess portion of public right-of-way approximately 1,200 square feet in size, that is partially improved as public roadway, located at the southeast corner of a property with an existing single-family residence at 1300 Prospect Drive (Attachment A – Location Map and Aerial).

The applicant is requesting the 1,200-square-foot portion of Ramona Drive be vacated for the purpose of improving the lot line configuration of their property at 1300 Prospect Drive. The private property owner will continue to maintain the landscaped planter portion.

In 1877, the subject portion of land was a portion of the parcel located at 1300 Prospect Drive which was labeled then as Block 24, Lot 5, under Map No. 6 of Redlands Heights, north of California Street (now known as Ramona Drive). In 1931, the owners of Lot 5 granted to the City of Redlands a portion of the lot for street purposes at a value of ten dollars. In 1976, Parcel Map No. 1340 did not include the subject portion of land as part of Ramona Drive. However, in 1978, Parcel Map No. 4425 included the subject portion of land north of Ramona Drive and southwest of Prospect Drive (a private road). The paved area of the subject portion of land is not necessary for public access, as adjacent owners would continue to have access via the 23-foot-wide entry to Prospect Drive for private use as listed within a recorded stipulation from 1999 (led by the Kimberly Shirk Association) for the use and access of Prospect Drive (a private road) between the surrounding property owners.

On July 22, 2025, the Planning Commission reviewed the proposal and voted to adopt Resolution No. 1710 determining the street vacation would be in conformance with the 2035 General Plan (see Attachment B - Planning Commission Staff Report).

The subject portion of right of way is approximately 77 feet wide with a total area of approximately 1,200 square feet (see Attachment C-2 - Legal Description and Exhibit). If approved, the vacated land would return to the abutting existing residential property (APN: 0174-012-07-0000) to improve the lot line configuration of their property at 1300 Prospect Drive.

Pursuant to the California Streets and Highways Code (which defines the general procedures for public street and easement vacations), the City Council may adopt a resolution summarily vacating a public street upon finding (supported by substantial evidence) that the right of way is no longer needed for vehicular or pedestrian traffic and is unnecessary for present or prospective use. The finding can be made for the subject segment of the public road which exceeds the street width required for a Local Road pursuant to the 2035

General Plan and is not required for public street or highway purposes. Therefore, the summary vacation meets the criteria and may be approved.

Based on the existing conditions and the adjoining land uses, the excess right-of-way may be considered not necessary for public access. The subject area consists of landscaping and paving which connects to the residential property at 1300 Prospect Drive. The paved area of the subject portion of land is not necessary for public access as adjacent owners would continue to have access via the 23-foot-wide entry to Prospect Dr./Ct. (a private road) as listed within the recorded stipulation from 1999. The proposed Street Vacation is not expected to result in any negative impacts on the traffic-carrying capacity of Ramona Drive (a public street), since the area proposed to be vacated has been determined to be excess right-of-way by the City Engineer and is not currently in public use.

**ENVIRONMENTAL REVIEW:**

Street Vacation No. 197 will have no potentially significant effects on the environment and qualifies for exemption from environmental review in accordance with Section 15061(b)(3) of the California Environmental Quality Act (CEQA) Guidelines. Section 1506(b)(3) is the "general rule" exemption for projects where it can be seen with certainty that there will be no environmental effects as a result of the activity.

**ALTERNATIVES:**

The City Council may:

1. Continue the matter to allow for additional information; or,
2. Not adopt the Resolution.

**STRATEGIC PLAN:**

Not applicable.

**SUBMITTED BY:**
Brian Desatnik, Development Services Director

**RECOMMENDED BY:**
Charles M. Duggan Jr., City Manager

**REVIEWED BY:**
Brian Foote, City Planner/Planning Manager
Yvette M. Abich Garcia, City Attorney
Danielle Garcia, Management Services/Finance Director

Janice McConnell, Assistant City Manager
Chris Boatman, Assistant City Manager

**PREPARED BY:**
Jazmin Serrato, Associate Planner

---

## Fiscal Impact

**Fiscal Year:** FY 2025-26

**Appropriation Required Y/N:** No

**Discussion:**

Vacation of the right-of-way will not have a negative fiscal impact on the City's budget. A fee of $4,571.00 has been paid by the applicant to defray the expenses of researching and processing this application.

---

## Attachments

Attachment A - Location Map and Aerial

Attachment B - Planning Commission Staff Report

Attachment C-1 – City Council Resolution No. 8714

Attachment C-2 – Exhibits A and B to Resolution No. 8714 (Legal Description and Exhibit)

---

**City of Redlands**

# Attachment A - Location Map & Aerial

**Author:** Redlands GIS

**Legend**

Parcels

City of Redlands
REQUEST FOR PLANNING COMMISSION ACTION

**Planning Commission** **Agenda Item NO. 5.A.**
**Meeting Date:** 07/22/2025

---

**APPLICANT:**

**SAJID A. AHMED**
(PROJECT PLANNER: JAZMIN SERRATO, ASSOCIATE PLANNER)

Consideration of a Determination for General Plan conformity for **Street Vacation No. 197** - A request to vacate a small portion of Ramona Drive, consisting of approximately 77 linear feet (1,200 square-feet) of public right-of-way, located adjacent to the property at 1300 Prospect Drive. The subject portion of right-of-way is located at the southeast corner of 1300 Prospect Drive (APN: 0174-012-07-0000). This proposal qualifies for exemption from environmental review pursuant to Section 15061(b)(3) of the California Environmental Quality Act Guidelines.

**SYNOPSIS**

| | | |
|---|---|---|
| 1. General Plan Designation: | Very Low Density Residential | |
| 2. Existing Zoning: | Residential Estate (R-A) District | |
| 3. Surrounding Zoning: | North, East, & South: Residential Estate (R-A) District<br>West: Planned Residential Development – Residential Estate (R-A) District & Suburban Residential (R-S) District | |
| 4. Existing Land Use: | The subject area consists of a portion of Ramona Drive right-of-way that is adjacent to an existing single-family residence and Prospect Drive. | |
| 5. Surrounding Land Use: | North: Citrus Grove, Kimberly Crest House and Gardens<br>East: Citrus Grove/Agriculture<br>South: Vacant land & Single Family Residential<br>West: Single Family Residential | |
| 6. Area / Topography: | The public right-of-way to be vacated is flat, consisting of a landscape planter and asphalt. | |
| 7. Environmental Determination: | Exempt from environmental review pursuant to Section 15061(b)(3) of the California Environmental Quality Act Guidelines. | |
| 8. Socio-Economic Cost / Benefit Study: | Not Applicable. | |
| 9. Planning Commission Submittal Dates: | (A) Date Submitted:<br>(B) Date Accepted As Complete:<br>(C) Planning Commission Meeting: | August 20, 2024<br>June 3, 2025<br>July 22, 2025 |

## PROPOSAL

The applicant (the property owner of 1300 Prospect Drive) has filed an application to vacate a small portion of public right-of-way approximately 1,200 square feet in size that is partially improved as a public roadway. The subject portion of right-of-way is located at the southeast corner of a property with an existing single-family residence at 1300 Prospect Drive (see Attachments A and B). Approximately 530 square feet of the subject right-of-way consists of a landscape planter (maintained by the property owner of 1300 Prospect Drive) and the remaining portion is paved with asphalt.

The applicant is requesting the 1,200-square-foot portion of Ramona Drive be vacated for the purpose of improving the lot line configuration of his property at 1300 Prospect Drive. The private property owner will continue to maintain the landscaped planter portion.

Noteworthy is that a portion of Prospect Dr./Ct. (totaling 341 feet in length) is considered a private road because it crosses into private property at 1300 Prospect Drive, and therefore, is not considered public right-of-way. This portion of roadway is not a part of this Street Vacation request. The Kimberly Crest historical property is located immediately to the northeast of 1300 Prospect Dr., with one means of roadway access provided from Prospect Dr./Ct. (see Background section below for further discussion).

## BACKGROUND

In 1877, the subject portion of land was a portion of the parcel located at 1300 Prospect Drive, which was labeled then as Block 24, Lot 5, under Map No. 6 of Redlands Heights, north of California Street (now known as Ramona Drive). In 1931, the owners of Lot 5 granted to the City of Redlands a portion of the lot for street purposes at a value of ten dollars. In 1976, Parcel Map No. 1340 did not include the subject portion of land as part of Ramona Drive. However, in 1978, Parcel Map No. 4425 includes the subject portion of land north of Ramona Drive (a public road) and southwest of Prospect Drive (a private road).

Additionally, there is a recorded stipulation from 1999 (led by the Kimberly Shirk Association) for the use and access of Prospect Drive (private road) between the surrounding property owners. There is a gate located north of the subject portion of land for access to the private road which leads to the Kimberly Crest House and Gardens.

In 1985, the City Council approved Resolution No. 4055 (Attachment C) to preserve cut stone curbs and walls in older neighborhoods to preserve their historical character and appearance. The subject portion of Ramona Drive contains a landscape planter with a cut stone curb (in good condition) which aligns and extends with the southern property line of 1300 Prospect Drive. Although this area is not listed as a priority area for preservation, Resolution 4055 requires adjacent property owners to maintain in good condition all existing cut stone curbs along their respective frontages.

## ANALYSIS

Pursuant to State law, the City may regulate traffic on its public streets, alleys, and walkways only to the extent expressly authorized. The law permits the City to vacate a street, alley, or walkway upon a finding supported by substantial evidence that the right of way is no longer needed for vehicular or pedestrian traffic and is unnecessary for present or prospective use.

California Government Code Section 65402(a) requires that prior to considering a vacation or abandonment of any public right-of-way, the planning agency (i.e., Planning Commission) shall review the matter and render a determination as to the proposal’s conformity with the City’s General Plan.

The 2035 General Plan's Connected City chapter indicates Ramona Drive as a "Local Road" on Figure 5-5, Roadway Classifications. This roadway has been constructed with 18 feet of paving within approximately 60 feet of right-of-way (total right-of-way width varies). The subject portion of right-of-way (at the intersection of Ramona Dr. and Prospect Dr./Ct.) currently exceeds the width requirements of Ramona Drive as a public road. A portion of the subject area consists of a landscape planter maintained by the property owner of 1300 Ramona Drive, and the remaining portion is paved with asphalt that exceeds the width requirement for Ramona Drive along this segment of street. The subject area may be considered as excess right-of-way, and if the Street Vacation request is approved, it would not conflict with any General Plan map or designation.

Based on the existing conditions and the adjoining land uses, the excess right-of-way may be considered not necessary for public access. The subject area consists of landscaping and paving which connects to the residential property at 1300 Prospect Drive. The paved area of the subject portion of land is not necessary for public access as adjacent owners would continue to have access via the 23-foot-wide entry to Prospect Dr./Ct. (a private road) as listed within the recorded stipulation from 1999. The proposed Street Vacation is not expected to result in any negative impacts on the traffic-carrying capacity of Ramona Drive (a public street), since the area proposed to be vacated has been determined to be excess right-of-way by the City Engineer and is not currently in public use.

Additionally, City Council Resolution No. 4055 requires all existing cut stone curbs and walls within public right-of-way to be maintained in good condition by the adjacent property owners. The northerly side of Ramona Drive has a cut stone wall, varying from 1' to 2' high, that wraps around the property at 1300 Prospect Drive. Similarly, Prospect Dr./Ct. (private road), a large portion of which is on the property of 1300 Prospect Drive, has a cut stone wall varying between 2' to 4' high at the intersection with Ramona Drive. These cut stone curbs and walls adjacent to 1300 Prospect Drive would be expected to be maintained and preserved in good condition by the property owner (the applicant in this case).

## ENVIRONMENTAL REVIEW

Street Vacation No. 197 will have no significant effects or potentially significant effects on the environment as a result of this proposal, and qualifies for exemption from environmental review in accordance with Section 158061(b)(3) of the California Environmental Quality Act (CEQA) Guidelines.

## FINDINGS

The Planning Commission may find and determine that the requested Street Vacation is consistent with the City's General Plan.

## RECOMMENDATIONS

Staff recommends that the Planning Commission find that Street Vacation No. 197 is in conformity with the City's General Plan.

## MOTIONS

"I move that the Planning Commission adopt Resolution No. 1710 and determine that Street Vacation No. 197 for an excess portion of Ramona Drive located adjacent to 1300 Prospect Drive is in conformity with the City's General Plan."

---

**Attachments**

Attachment A - Location Map and Aerial Photo
Attachment B - Legal Description & Exhibit
Attachment C - City Council Resolution No. 4055
Attachment D - Resolution No. 1710

---

**City of Redlands**

# Attachment A - Location Map & Aerial

**Author:** Redlands GIS

**Legend**

Parcels

EXHIBIT "A"

DESCRIPTION OF PROPERTY

REAL PROPERTY IN THE CITY OF REDLANDS, COUNTY OF SAN BERNARDINO, STATE OF CALIFORNIA, DESCRIBED AS FOLLOWS:

THAT PORTION OF LOT 5 OF BELLE VIEW TRACT, IN THE CITY OF REDLANDS, COUNTY OF SAN BERNARDINO, STATE OF CALIFORNIA, AS SHOWN ON MAP THEREOF ENTITLED BELLE VIEW TRACT, A SUBDIVISION OF BLOCK 24, MAP No. 6, REDLANDS HEIGHTS AND BLOCK 13, AS SHOWN ON MAP No. 13, REDLANDS HEIGHTS, RECORDED IN BOOK 12 OF MAPS, PAGE 54, SAID PORTION OF LOT 5 BEING DESCRIBED IN DOCUMENT RECORDED NOVEMBER 11, 2010 AS DOCUMENT No. 2010-0505333, OFFICIAL RECORDS OF SAID COUNTY, MORE PARTICULARLY DESCRIBED AS FOLLOWS:

BEGINNING AT THE INTERSECTION OF THE NORTHERLY LINE OF RAMONA DRIVE (FORMERLY CALIFORNIA STREET) AND THE SOUTHWESTERLY LINE OF THE PRIVATE ROAD BETWEEN LOTS 5 AND 6 AS SHOWN ON SAID BELLE VIEW TRACT;

THENCE WESTERLY ALONG THE NORTHERLY LINE OF SAID RAMONA DRIVE SOUTH 89°11'35" WEST (RECORDED AS SOUTH 89°08'00" WEST), 77.00 FEET TO POINT OF CUSP WITH A CURVE CONCAVE TO THE NORTHWEST AND HAVING A RADIUS OF 21.80 FEET AND TO WHICH POINT A RADIAL BEARS SOUTH 00°48'25" EAST:

THENCE NORTHEASTERLY, NORTHERLY AND NORTHWESTERLY ALONG SAID CURVE AN ARC DISTANCE OF 49.95 FEET THROUGH A CENTRAL ANGLE OF 131°17"12" TO A POINT ON THE SOUTHWESTERLY LINE OF SAID PRIVATE ROAD;

THENCE SOUTHEASTERLY ALONG THE SOUTHWESTERLY LINE OF SAID PRIVATE ROAD SOUTH 64°55'52" EAST, 56.57 FEET TO AN ANGLE POINT THEREIN;

THENCE CONTINUING ALONG SAID SOUTHWESTERLY LINE SOUTH 41°01'27" EAST, 15.05 FEET TO THE POINT OF BEGINNING.

CONTAINING 1,199.73 SQUARE FEET (0.028 ACRES)

PREPARED BY:

MARK S. WHITMER, L.S. 5535

DATE: 07/01/2024

LICENSED LAND SURVEYOR
MARK S. WHITMER
L.S. No. 5535
STATE OF CALIFORNIA

# EXHIBIT "B'

PLAT OF PROPERTY

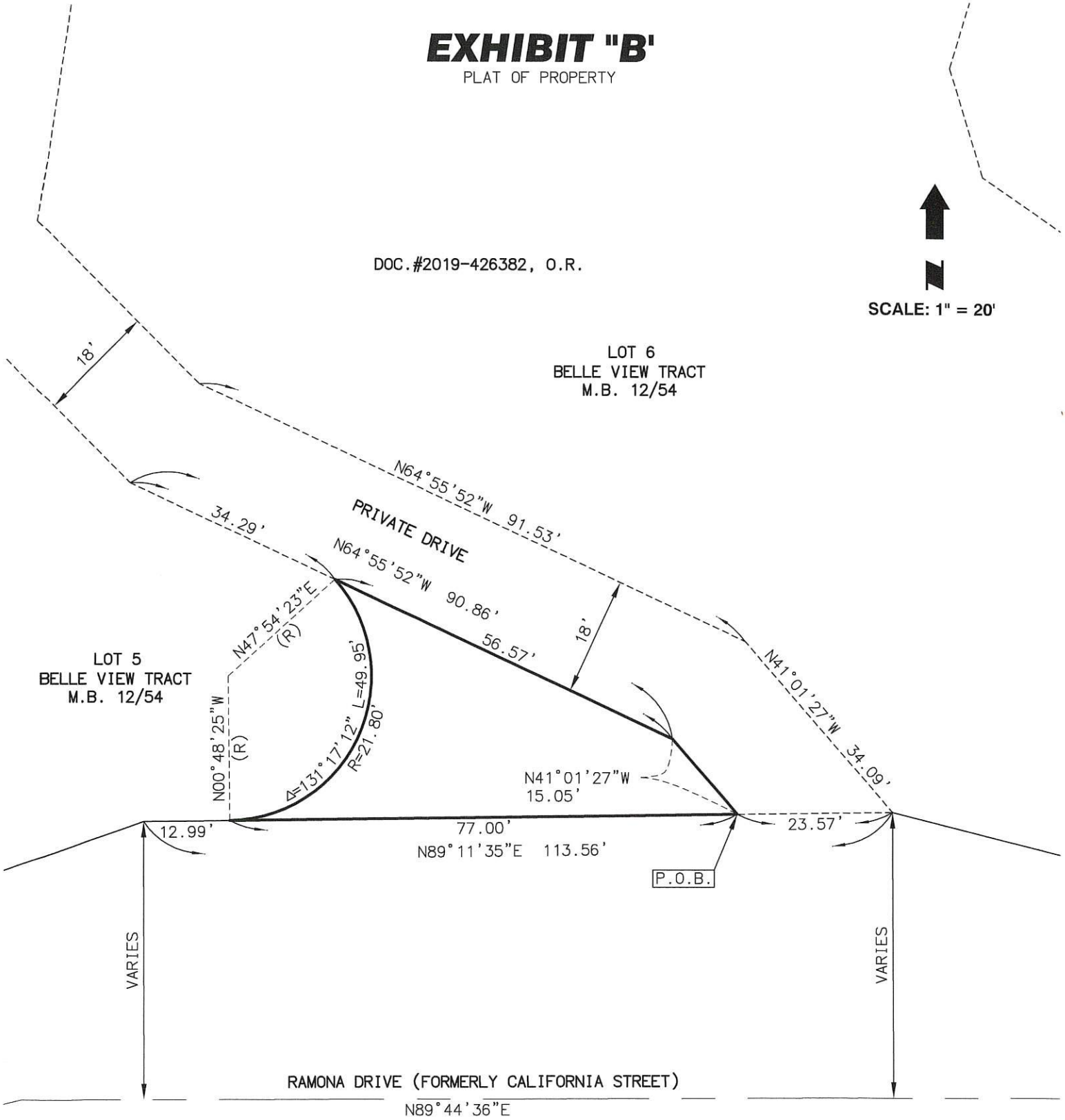


LEGEND

| | |
|---|---|
| DOC. | DOCUMENT |
| M.B. | MAP BOOK |
| O.R. | OFFICIAL RECORD |
| P.O.B. | POINT OF BEGINING |
| (R) | RTADIAL |

LICENSED LAND SURVEYOR
MARK S. WHITMER
L.S. No. 5535
STATE OF CALIFORNIA

PREPARED BY:

MARK S. WHITMER, L.S. 5535

DATE: 07/01/2024

HICKS & HARTWICK, INC.
CLOSURE REPORT
DATE: 07/01/2024 AT 11:18 AM
PROJECT:
DESCRIPTION:
CREATED BY: USER1

TRAVERSE OF: Lot 1

| BEARING | DISTANCE | NORTHING | EASTING |
|---|---|---|---|
| STARTING AT | | 4311.1361 | 5895.9920 |
| S 89 11 35 W | 77.00' TO | 4310.0517 | 5818.9996 |
| N 00 48 25 W (R) | 21.80' TO | 4331.8495 | 5818.6926 |

DELTA = 131 17 12 RADIUS = 21.80' LENGTH = 49.95'
CHORD = N 23 32 59 E 39.72' TANGENT = 48.15'

| | | | |
|---|---|---|---|
| N 47 54 23 E (R) | 21.80' TO | 4346.4635 | 5834.8696 |
| S 64 55 52 E | 56.57' TO | 4322.4944 | 5886.1106 |
| S 41 01 27 E | 15.05' TO | 4311.1402 | 5895.9891 |

ERROR OF CLOSURE NORTH = 0.00409305 EAST = 0.00291779
BEARING S 35 29 01 E DISTANCE = 0.0050
AREA = 1,199.73 SF 0.028 ACRES
PERIMETER = 198.57' PRECISION = 1 : 39504

RESOLUTION NO. 4055

A RESOLUTION OF THE CITY COUNCIL OF THE CITY OF REDLANDS REGARDING PRESERVATION OF CUTSTONE CURBS AND WALLS

WHEREAS, this City Council finds that cutstone curbs and walls throughout the City of Redlands, are important elements of the City's streetscape and represent the craftsmanship of an age gone by as well as an interesting aspect of the City's heritage; and

WHEREAS, the Historic and Scenic Preservation Commission has inventoried our cutstone curbs and found a majority of them to be in good condition; and

WHEREAS, most of these curbs are found in the central core area of the City between Center Street, Redlands Boulevard, Brookside Avenue and Highland Avenue but elsewhere in the City there are scattered stretches of such curbs or walls, the major portion of which are also in good repiar;

NOW, THEREFORE, BE IT RESOLVED by the City Council of the City of Redlands as follows:

1. All existing cutsone curbs and walls in the public right-of-way shall be maintained by the adjacent property owner in good repair.

2. Upon receipt of information or a complaint, property owners adjacent to curbs and walls in disrepair shall be notified by City staff of their responsibility to maintain such curbs and walls in a safe and attractive manner.

3. The City of Redlands Public Works Standard Detail Drawing No. 100 D (Standard Stone Curb Section) shall be used for new curbing and for repair of existing curbing. Alterations or repairs to existing cutstone curbs shall be effected in a manner conforming to surrounding curb characteristics. For example, repairs to splitface or rounded stone shall include replacements with the same kind of stone.

4. When streets with cutstone curbs are widened, cutstones shall be salvaged, and developers shall be encouraged to reuse the cutstone curbs as part of such street improvement project.

5. Cutstone materials which must be removed shall be stored at the City's stockpile for use in repair and restoration of other cutstone curb and wall areas. Stockpiled cutstones shall be utilized for public right-of-way improvements, not for private construction.

6. When resurfacing City streets with cutstone curbing, City contractors and crews shall take all necessary care to assure that such curbs will retain their full height and their gutters will remain exposed. City specifications on public works projects shall reflect this policy.

7. Cutstone curbs and walls shall not be painted, and instead appropriate traffic regulatory signs shall be posted, unless otherwise determined by the Street Superintendent when considering public safety, historic preservation, and aesthetics. When any painting of cutstones over 25 feet in length is considered, the Street Superintendent shall first consult the Historic and Scenic Preservation Commission.

8. Where curb sections have been painted, the City shall encourage the returning of the curbs to their natural state rather than any repainting.

9. The City shall develop a public awareness program to explain the importance of cutstone curbs and walls to the City's heritage and to assist property ownes in fulfilling their responsibilities for maintenance and upkeep of such curbs and walls.

10. The following are priority areas for cutstone curb and wall preservation:

Major Streets

Brookside Avenue
Cajon Street
Center Street
Colton Avenue (Between Orange St. and Grove St.)
Cypress Avenue (Between Cajon St. and Center St.)
Fern Avenue (Between Redlands Blvd. and Center St.)
Highland Avenue (Between Cajon St. and Crown St.)
Olive Avenue (Between Lakeside Ave. and Citrus Ave.)
Palm Avenue (Between Cajon St. and Center St.)
Texas Street (Between Colton Ave. and Pennsylvania Ave.)

Secondary Streets

Alvarado Street (Between Olive Ave. and Highland Ave.)
Buena Vista Street (Between Brookside Ave. and Fern Ave.)
Clay Street (Between Brockton Ave. and Lugonia Ave.)
Clark Street (Between Eureka St. and Redlands Blvd.)
Crescent Street
Cypress Circle
Elizabeth Street (Between Crescent St. and Halsey St.)
Eureka Street (Between Brookside Ave. and Cypress Ave.)
Fourth Street (Between Olive Ave. and Cypress Ave.)
Grant Street (Between Brookside Ave. and Fern Ave.)
High Avenue (East of Church St.)
Home Street (Between Alvarado St. and Cajon St.)
Knoll Road (Between Crescent St. and Fountain Ave.)
Myrtle Street (Between Olive Ave. and Fern Ave.)
Nordina Street (Between Olive Ave. and Fern Ave.)
Ohio Street (Between Brockton Ave. and Lugonia Ave.)

Secondary Streets (Continued)

San Jacinto Street
Sonora Street (Between Olive Ave. and Fern Ave.)
Summit Avenue
University Avenue
Washington Street (Between Brockton Ave. and Delaware Ave.)
Western Avenue (Between Texas St. and Herald St.)

Streets with Significant Walls

Alessandro Road (Between Crescent St. and Sunset Dr.)
Mariposa
Sunset Drive South

Other Areas

Sylvan Park
University of Redlands

ADOPTED, SIGNED AND APPROVED this 7th day of May, 1985.

Carole Beswick
Mayor of the City of Redlands

ATTEST:

Lorrie Poyzer
City Clerk

RESOLUTION NO. 1710

A RESOLUTION OF THE PLANNING COMMISSION OF THE CITY OF REDLANDS DETERMINING THAT STREET VACATION NO. 197 TO VACATE EXCESS PUBLIC RIGHT-OF-WAY, LOCATED ADJACENT TO 1300 PROSPECT DRIVE, IS IN CONFORMITY WITH THE CITY'S GENERAL PLAN.

WHEREAS, Sajid A. Ahmed ("Applicant") has filed an application for Street Vacation No. 197 to vacate a portion of Ramona Drive, consisting of approximately 77 linear feet (1,200 square feet) of public right-of-way, located at the southeast corner of a residential property at 1300 Prospect Drive (APN: 0174-012-07-0000); and

WHEREAS, the above-described portion of public right-of-way is excess right-of-way of a street or highway (exceeding the street width required for a Local Road pursuant to the 2035 General Plan) and is not required for public street or highway purposes; and

WHEREAS, the City of Redlands is authorized to vacate all or part of a public street or public service easement within the City pursuant to the Public Street, Highway and Service Vacation Easements law (California Streets and Highway Code, Section 8300 et. seq.); and

WHEREAS, on July 22, 2025, the Planning Commission held a public meeting and considered the staff report, oral report, the testimony and the written evidence submitted by and on behalf of the applicant and the general public; and

WHEREAS, pursuant to Public Resources Code §15061(b)(3), the project is exempt from the California Environmental Quality Act as an activity covered by the general rule exemption, as the project will not have the potential for causing a significant effect on the environment and it can be seen with certainty that there is no possibility that the activity in question may have a significant effect on the environment; and

WHEREAS, on July 22, 2025, the Planning Commission considered if the requested street vacation is in conformance with the 2035 General Plan including the Connected City chapter and Figure 5-6 (Illustrative Street Sections).

NOW, THEREFORE, BE IT RESOLVED BY THE PLANNING COMMISSION OF THE CITY OF REDLANDS AS FOLLOWS:

SECTION 1. CALIFORNIA ENVIRONMENTAL QUALITY ACT. The project is exempt from CEQA in accordance with the California Environmental Quality Act Section 15061(b)(3), as there is no possibility that the Street Vacation may have a significant effect on the environment.

SECTION 2. FINDING OF GENERAL PLAN CONFORMITY. The proposed Street Vacation will be in conformity with the City's 2035 General Plan including the Connected City Chapter. The segment of Ramona Drive (a public road) around the requested Street Vacation

area will remain consistent with the General Plan's street width standard (60 feet) for a Local Street.

SECTION 3. RECOMMENDATION FOR APPROVAL. It is deemed advisable and desirable to vacate an approximately 1,200 square foot portion of excess public road right-of-way adjacent to 1300 Prospect Drive (APN: 0174-012-07), and is hereby recommended for approval, subject to the provisions of City Council Resolution No. 4055 pertaining to the preservation and maintenance of historical cut stone curbs and walls.

SECTION 4. EFFECTIVE DATE. This Resolution shall become effective upon adoption.

ADOPTED, SIGNED AND APPROVED this 22nd day of July, 2025.

Karah Shaw, Chair
Planning Commission

ATTEST:

Katherine Coleson, Secretary to the Planning Commission

I, Katherine Coleson, Secretary to the Planning Commission of the City of Redlands, hereby certify that the foregoing resolution was duly adopted by the Planning Commission at a regular meeting thereof held on the 22nd day of July, 2025, by the following vote:

AYES: 6
NOES:
ABSENT:
ABSTAIN:

Katherine Coleson, Secretary
to the Planning Commission

RESOLUTION NO. 8714

A RESOLUTION OF THE CITY COUNCIL OF THE CITY OF REDLANDS FINDING THAT EXCESS PUBLIC ROAD RIGHT-OF-WAY LOCATED ADJACENT TO THE PROPERTY AT 1300 PROSPECT DRIVE IS UNNECCESSARY FOR PRESENT OR PROSPECTIVE STREET PURPOSES, AND ORDERING A SUMMARY VACATION (STREET VACATION NO. 197)

WHEREAS, Sajid A. Ahmed ("Applicant") has requested the summary vacation of a portion of excess public right-of-way, approximately 1,200 square feet in size, that is partially improved as public roadway, located at the southeast corner of a property with an existing single-family residence at 1300 Prospect Drive (APN: 0174-012-07-0000); and

WHEREAS, the City of Redlands is authorized to vacate all or part of a public street or public service easement within the City pursuant to the Public Streets, Highways, and Service Easements Vacation Law (California Streets & Highways Code, Section 8300 et. seq.); and

WHEREAS, pursuant to Section 8334(a) of the California Streets & Highways Code, the City may summarily vacate excess right-of-way of a street not required for street purposes, and the proposal meets this criteria; and

WHEREAS, in accordance with Section 8334.5 of the California Streets & Highways Code, the street may be summarily vacated if there are no in-place public utility facilities that are in use that would be affected by the vacation, and the proposal meets this criteria; and

WHEREAS, the proposal qualifies for exemption from environmental review in accordance with the California Environmental Quality Act (CEQA), pursuant to Section 15061(b)(3) of the CEQA Guidelines for projects where there is no possibility of any significant environmental effects; and

WHEREAS, the City has determined that the City Engineer (or other City official deemed appropriate or otherwise authorized by City) shall be authorized to (a) sign all documentation necessary to vacate and quitclaim said excess right-of-way and easements, and (b) cause such documentation to be recorded in the Official Records; and

WHEREAS, on July 22, 2025, the Planning Commission held a public meeting on the proposal, and found that the vacation of the excess right-of-way would be in conformance with the City of Redlands 2035 General Plan; and

WHEREAS, on September 16, 2025, the City Council held a public meeting on the proposed summary vacation, and considered all testimony provided by the applicant and any other persons interested on the proposed vacation.

NOW, THEREFORE, BE IT RESOLVED BY THE CITY COUNCIL OF THE CITY OF REDLANDS AS FOLLOWS:

SECTION 1. The project is exempt from CEQA in accordance with the California Environmental Quality Act Section 15061(b)(3), as there is no possibility that the Street Vacation may have a significant effect on the environment

SECTION 2. The City Council of the City of Redlands, having elected to proceed under the provisions of Division 9, Part 3, Chapter 4 of the Streets & Highways Code of the State of California, hereby orders the summary vacation of approximately 1,200 square feet of excess right-of-way, as more specifically described in Exhibit "A" and "B" attached hereto and made a part hereof, based upon the following determinations:

A. In accordance with Streets & Highways Code Section 892, the subject segment of public right-of-way is not useful as a motorized or non-motorized transportation facility; and

B. The subject segment of public right-of-way is excess and unnecessary right-of-way for street or highway purposes.

SECTION 3. The City Engineer (or other City official deemed appropriate or otherwise authorized by City) is hereby authorized to and shall sign all documentation necessary to effect the vacation of the subject excess right-of-way, at which time the subject excess right-of-way shall be vacated and no longer constitute a street, highway, or public service easement.

SECTION 4. This resolution shall take effect immediately following the recordation of this Resolution by the San Bernardino County Recorder.

ADOPTED, SIGNED AND APPROVED this 16th day of September 2025

_____
Mario Sauceda, Mayor

ATTEST:

_____
Jeanne Donaldson, City Clerk

I, Jeanne Donaldson, City Clerk of the City of Redlands hereby certify that the foregoing resolution was duly adopted by the City Council at a regular meeting thereof, held on the 16th day of September 2025, by the following vote:

AYES:
NOES:
ABSENT:
ABSTAIN:

_____
Jeanne Donaldson, City Clerk

**Exhibit A**
**Legal Description**
**Street Vacation No. 197**

[Attached]

**Exhibit B**
**Plat Map**
**Street Vacation No. 197**

[Attached]

EXHIBIT "A"

DESCRIPTION OF PROPERTY

REAL PROPERTY IN THE CITY OF REDLANDS, COUNTY OF SAN BERNARDINO, STATE OF CALIFORNIA, DESCRIBED AS FOLLOWS:

THAT PORTION OF LOT 5 OF BELLE VIEW TRACT, IN THE CITY OF REDLANDS, COUNTY OF SAN BERNARDINO, STATE OF CALIFORNIA, AS SHOWN ON MAP THEREOF ENTITLED BELLE VIEW TRACT, A SUBDIVISION OF BLOCK 24, MAP No. 6, REDLANDS HEIGHTS AND BLOCK 13, AS SHOWN ON MAP No. 13, REDLANDS HEIGHTS, RECORDED IN BOOK 12 OF MAPS, PAGE 54, SAID PORTION OF LOT 5 BEING DESCRIBED IN DOCUMENT RECORDED NOVEMBER 11, 2010 AS DOCUMENT No. 2010-0505333, OFFICIAL RECORDS OF SAID COUNTY, MORE PARTICULARLY DESCRIBED AS FOLLOWS:

BEGINNING AT THE INTERSECTION OF THE NORTHERLY LINE OF RAMONA DRIVE (FORMERLY CALIFORNIA STREET) AND THE SOUTHWESTERLY LINE OF THE PRIVATE ROAD BETWEEN LOTS 5 AND 6 AS SHOWN ON SAID BELLE VIEW TRACT;

THENCE WESTERLY ALONG THE NORTHERLY LINE OF SAID RAMONA DRIVE SOUTH 89°11'35" WEST (RECORDED AS SOUTH 89°08'00" WEST), 77.00 FEET TO POINT OF CUSP WITH A CURVE CONCAVE TO THE NORTHWEST AND HAVING A RADIUS OF 21.80 FEET AND TO WHICH POINT A RADIAL BEARS SOUTH 00°48'25" EAST:

THENCE NORTHEASTERLY, NORTHERLY AND NORTHWESTERLY ALONG SAID CURVE AN ARC DISTANCE OF 49.95 FEET THROUGH A CENTRAL ANGLE OF 131°17"12" TO A POINT ON THE SOUTHWESTERLY LINE OF SAID PRIVATE ROAD;

THENCE SOUTHEASTERLY ALONG THE SOUTHWESTERLY LINE OF SAID PRIVATE ROAD SOUTH 64°55'52" EAST, 56.57 FEET TO AN ANGLE POINT THEREIN;

THENCE CONTINUING ALONG SAID SOUTHWESTERLY LINE SOUTH 41°01'27" EAST, 15.05 FEET TO THE POINT OF BEGINNING.

CONTAINING 1,199.73 SQUARE FEET (0.028 ACRES)

PREPARED BY:

MARK S. WHITMER, L.S. 5535

DATE: 07/01/2024

LICENSED LAND SURVEYOR
MARK S. WHITMER
L.S. No. 5535
STATE OF CALIFORNIA

# EXHIBIT "B'

PLAT OF PROPERTY

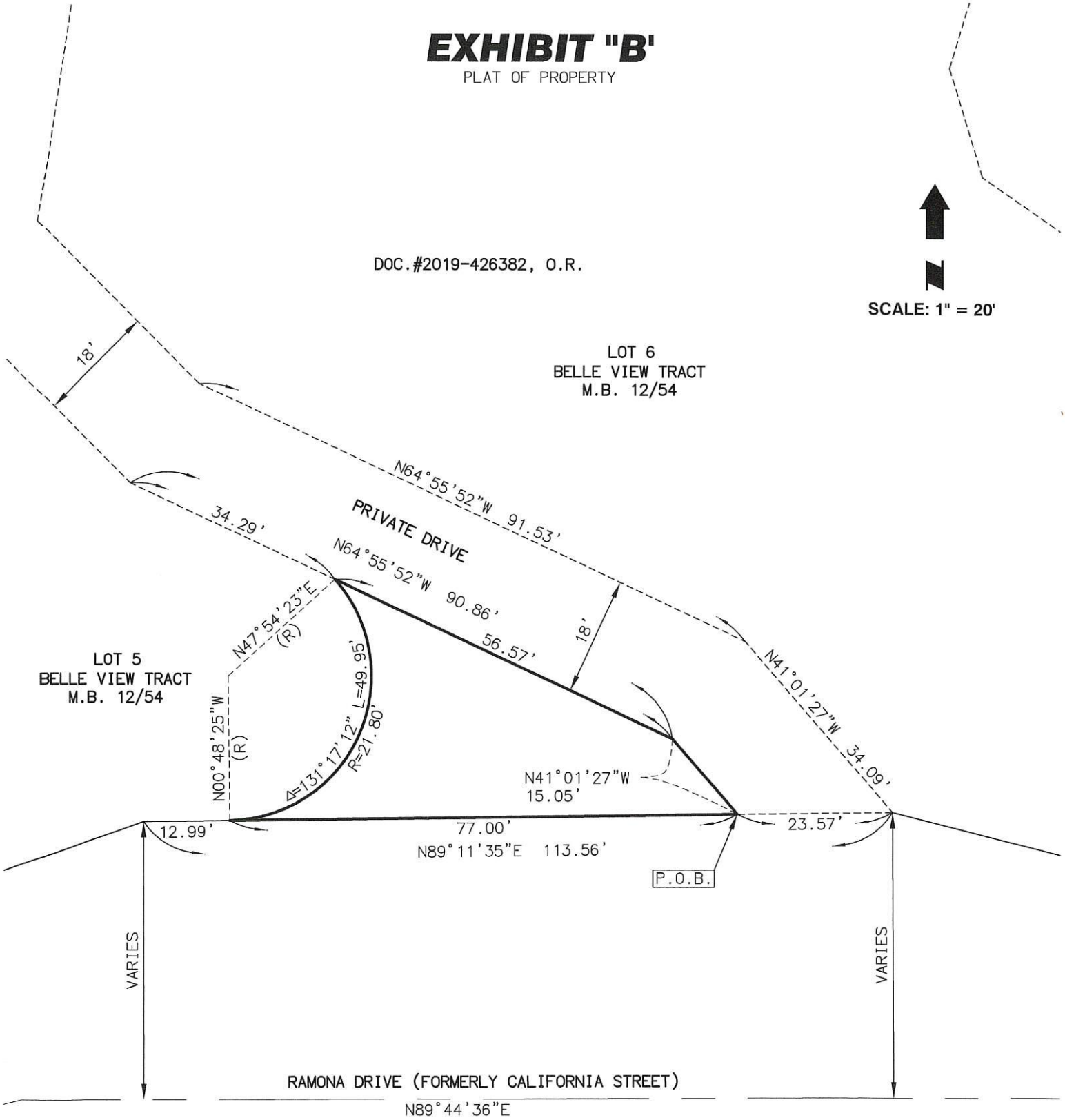


LEGEND

| | |
|---|---|
| DOC. | DOCUMENT |
| M.B. | MAP BOOK |
| O.R. | OFFICIAL RECORD |
| P.O.B. | POINT OF BEGINING |
| (R) | RTADIAL |

LICENSED LAND SURVEYOR
MARK S. WHITMER
L.S. No. 5535
STATE OF CALIFORNIA

PREPARED BY:

MARK S. WHITMER, L.S. 5535

DATE: 07/01/2024

HICKS & HARTWICK, INC.
CLOSURE REPORT
DATE: 07/01/2024 AT 11:18 AM
PROJECT:
DESCRIPTION:
CREATED BY: USER1

TRAVERSE OF: Lot 1

| BEARING | DISTANCE | NORTHING | EASTING |
|---|---|---|---|
| STARTING AT | | 4311.1361 | 5895.9920 |
| S 89 11 35 W | 77.00' TO | 4310.0517 | 5818.9996 |
| N 00 48 25 W (R) | 21.80' TO | 4331.8495 | 5818.6926 |

DELTA = 131 17 12 RADIUS = 21.80' LENGTH = 49.95'
CHORD = N 23 32 59 E 39.72' TANGENT = 48.15'

| | | | |
|---|---|---|---|
| N 47 54 23 E (R) | 21.80' TO | 4346.4635 | 5834.8696 |
| S 64 55 52 E | 56.57' TO | 4322.4944 | 5886.1106 |
| S 41 01 27 E | 15.05' TO | 4311.1402 | 5895.9891 |

ERROR OF CLOSURE NORTH = 0.00409305 EAST = 0.00291779
BEARING S 35 29 01 E DISTANCE = 0.0050
AREA = 1,199.73 SF 0.028 ACRES
PERIMETER = 198.57' PRECISION = 1 : 39504

**City Council/Financing Authority Meeting** **I. 7.**

**DATE:** 09/16/2025

**TO:** Honorable Mayor and City Council Members

**SUBJECT:** Approve of the Local Cooperative Fire Protection Agreement between the City of Redlands and the U.S. Department of Agriculture, Forest Service, San Bernardino National Forest (Fire Chief Sessler)

---

**MOTION(S):**

If the City Council determines that staff's recommendation is appropriate, the following motion is provided:

I move to approve the Local Cooperative Fire Protection Agreement between the City of Redlands and the U.S. Department of Agriculture, Forest Service, San Bernardino National Forest, and authorize the Mayor to execute the agreement on behalf of the City.

**RECOMMENDATION:**

Staff recommends the City Council approve the Local Cooperative Fire Protection Agreement between the City of Redlands and the U.S. Department of Agriculture, Forest Service, San Bernardino National Forest, for the provision of reciprocal fire protection, including mutual aid, reimbursable assistance, and coordinated efforts in the prevention, detection, management, and suppression of wildland fires.

**DISCUSSION:**

The Local Cooperative Fire Protection Agreement is established under the Reciprocal Fire Protection Act of 1955 (42 USC 1856a, as amended). This federal law authorizes federal agencies, such as the U.S. Forest Service, to enter into agreements with state and local fire organizations to provide mutual aid for fire protection. The Act allows agencies to share resources, equipment, and personnel for the prevention, detection, and suppression of fires, and it

permits reimbursement for assistance when appropriate. Its purpose is to improve efficiency, reduce duplication of services, and ensure faster, coordinated response to fires that cross jurisdictional boundaries between federal, state, and local lands.

Given Redlands' proximity to federally administered forest lands, cooperative agreements are necessary to ensure effective response to wildland fire incidents that extend across jurisdictional boundaries. The Local Cooperative Fire Protection Agreement provides reciprocal fire protection through mutual aid, reimbursable assistance, and coordinated efforts in the prevention, detection, management, and suppression of wildland fires.

The Forest Service is responsible for the prevention, detection, management, and suppression of wildland fires on San Bernardino National Forest-administered lands. While the Forest Service does not respond to structure fires, vehicle fires, or traffic accidents, it may assist when such incidents create a wildland fire threat to adjacent federal lands. In turn, while the Redlands Fire Department provides structural fire protection, emergency medical services, hazardous response, and fire prevention within the City of Redlands, they also provide mutual aid support when wildland fires threaten lands adjacent to the City's jurisdiction.

The agreement enhances public safety, improves efficiency by reducing duplication of resources, and strengthens interagency coordination. It ensures timely response and improves outcomes during wildland fire incidents that may affect both city and federal lands.

**ALTERNATIVES:**

The City Council may decline to approve the agreement. However, without this agreement, the City would have limited ability to secure coordinated support from the U.S. Forest Service during wildland fire events affecting areas adjacent to Redlands.

**STRATEGIC PLAN:**

Priority B - Public Health and Safety

**SUBMITTED BY:**
Rich Sessler, Fire Chief

**RECOMMENDED BY:**
Charles M. Duggan Jr., City Manager

**REVIEWED BY:**
Yvette M. Abich Garcia, City Attorney
Janice McConnell, Assistant City Manager
Danielle Garcia, Management Services/Finance Director

**PREPARED BY:**
Bruni Reyes, Management Analyst

---

## Fiscal Impact

**Fiscal Year:** FY 2025-26

**Revenue Generating:** N

**Discussion:**

There is no direct fiscal impact to the General Fund. Any costs incurred for reimbursable assistance will be managed and recovered in accordance with the provisions of the agreement.

---

## Attachments

Local Fire Protection Agreement

---

FS Agreement No. 25-FI-11051200-005

Cooperator Agreement No.

# LOCAL
# COOPERATIVE FIRE PROTECTION AGREEMENT
# Between
# CITY OF REDLANDS CALIFORNIA
# And The
# USDA, FOREST SERVICE
# SAN BERNARDINO NATIONAL FOREST

This LOCAL COOPERATIVE FIRE PROTECTION AGREEMENT is hereby entered into by and between the CITY OF REDLANDS CALIFORNIA and the SAN BERNARDINO NATIONAL FOREST, hereinafter referred to as "the Cooperator," and the United States Department of Agriculture (USDA), Forest Service, SAN BERNARDINO NATIONAL FOREST hereinafter referred to as the "U.S. Forest Service," under the Reciprocal Fire Protection Act of May 27, 1955 (42 USC 1856a), as amended.

Background: The Redlands Fire Department (RFD), founded in 1988, and located in San Bernardino County, California. RFD is dispatched by the Consolidated Fire Agencies of San Bernardino County (CONFIRE), ensuring coordinated regional response. RFD offers: Fire suppression, Emergency medical services, Hazardous materials response, Fire prevention and public education programs. RFD operates multiple stations across the city: Downtown Redlands, Redlands Heights, North Redlands and West Redlands.

## I. PURPOSE:

The purpose of this agreement is to provide for reciprocal fire protection, including mutual aid, reimbursable assistance, and coordination for the prevention, detection, management, and suppression of wildland fires on property within the protection areas or jurisdiction of the parties that are signatory to this agreement.

## II. STATEMENT OF MUTUAL BENEFIT AND INTERESTS:

The U.S. Forest Service has the responsibility for fire protection, which includes prevention, detection, management, and suppression of wildland fires on **SAN BERNARDINO NATIONAL FOREST** administered lands and has an interest in protection and suppression of wildland fires on adjacent or intermingled State and private forested land.

The U.S. Forest Service does not respond to structure fires, vehicle fires or traffic accidents. However, the U.S. Forest Service may, as available, respond to such incidents for wildland fire suppression activity when adjacent lands or property covered under this agreement are threatened by fire from such incidents.

The Cooperator is a fire organization that has the responsibility of maintaining fire protection facilities in the vicinity of **SAN BERNARDINO NATIONAL FOREST** administered lands, for mutual aid in furnishing fire protection for such property and for other property for which such organization normally provides fire protection.

Therefore, it is mutually advantageous, in their mutual interest, and in the public interest, for the parties to coordinate their efforts in the prevention, detection, management, and suppression of wildland fires in and adjacent to their areas of responsibility to limit duplication and improve efficiency and effectiveness.

In consideration of the mutual commitments and conditions herein made, the parties agree as follows:

## III. TERMINOLOGY, EXHIBITS, AND SUPPLEMENTS:

A. Words and phrases used herein may have different meanings or interpretations for different readers. To establish a common understanding, some words and phrases as used herein are defined in the text of this agreement. Where there are inconsistencies, the hierarchy of terminology will be those defined by statute, those defined by regulation, those defined in policy, those defined in this agreement, those defined in the National Wildfire Coordinating Group (NWCG) Glossary of Wildland Fire Terminology, and then all other agency and interagency documentation.

B. The following exhibits are incorporated into this agreement:
- Exhibit A – Map of Protection Areas and Boundaries
- Exhibit B – Protection (Operating) Plan
- Exhibit C – Fire Supplemental Project Agreement
- Exhibit D – Cost Share Agreement

C. Exhibit A must be completed and attached to this agreement prior to execution. The exhibit must illustrate the protection areas of the signatory parties, along with the scope of initial attack and associated mutual aid zones.

D. Exhibit B must be completed and attached to this agreement prior to execution. The exhibit must include a narrative description and/or a list of resources that document protection planning for operational efficiencies. Refer to VI-A-Protection (Operating) Plan for additional consideration.

E. Exhibits C and D are provided for standardized format and are intended to supplement this agreement. Completion and execution of Exhibit C or D does not require formal modification to this agreement. However, nothing in Exhibits C and D should conflict with the authority and provisions of this agreement.

F. The parties may attach other exhibits or operational information for reference so long as the additional exhibits and information do not conflict with the authority and provisions of this agreement.

## IV. RECIPROCAL FIRE PROTECTION:

A. The responsibilities of the parties to this agreement shall be distinguished as follows:

- **Jurisdictional Party** – Entity having land and resource management responsibility for a specific geographical or functional area as provided by federal, state or local law. Under no circumstances may a Jurisdictional Party abdicate legal responsibilities as provided by federal state, or local law.
- **Protecting Party** – Entity responsible for providing direct incident management within a specific geographical area pursuant to its jurisdictional responsibility or as specified and provided by contract or authorized agreement.
- **Supporting Party** – Entity providing suppression resources to assist a Protecting Party or a Jurisdictional Party.

B. RECIPROCAL (MUTUAL AID) FIRE PROTECTION. The parties shall establish a map depicting reciprocal initial attack zones and mutual aid fire protection for lands of intermingled or adjoining protection responsibility. The map must be attached to this agreement. Within such zones, a Supporting Party will, upon request or voluntarily, take initial attack action in support of the Protecting Party. The Protecting Party will not be required to reimburse the Supporting Party for costs incurred following the initial attack dispatch of any resource to the fire for the duration of the mutual aid period. The length of the mutual aid period is usually 24 hours, but no less than 12 hours.

**The length of the mutual aid period for this agreement is 12 HOURS. IF THE DURATION OF THE RESPONSE EXCEEDS 12 HOURS, THE COOPERATOR WILL BE REIMBURSED FROM THE BEGINNING AT THE TIME OF THE INITIAL DISPATCH.**

C. REIMBURSABLE FIRE ASSISTANCE. The Protecting Party may request suppression resources from the Supporting Party beyond initial attack or mutual aid period within the protection area or jurisdiction of the parties that are signatory to this agreement. Such suppression resources when dispatched to, and assigned a resource order number for, the incident shall be reimbursed by the Protecting Party.

D. WAIVER OF CLAIMS. Pursuant to 42 U.SC. 1856a et seq., each party to this agreement hereby waives any claim against any other party for loss or damage of its property and/or personal injury or death of its employees or agents occurring as a consequence of the performance of this agreement; provided, this provision shall not relieve any party from responsibility for claims from third parties for losses for which the party is otherwise legally liable. This provision pertains to the parties that are signatory to this agreement and does not pertain to claims advanced by third parties.

Claims requesting compensation for property loss or damage, personal injury, or death resulting from the negligence or other wrongful acts of employees performing under this agreement will be received by the Jurisdictional Party and forwarded to the hiring, or home agency of the allegedly negligent employee for processing. Nothing in this paragraph requires or implies any one is liable for any specific claim. Any liability for any claim will be based on this agreement and applicable law.

Employee claims for loss of or damage to personal property must be submitted to the Jurisdictional Party and then forwarded to the hiring, or home agency of the employee for processing in accordance with the hiring organization or agency's administrative procedures.

E. LOANED (OR SHARED) EQUIPMENT AND SUPPLIES. The parties recognize that wildland fire suppression will often involve the use of equipment, supplies and cache items. Equipment, supplies and cache items checked out (such as pumps, hoses, nozzles, etc.) or loaned by one party and received by another party, shall become the responsibility of the receiving party. Equipment, supplies, and cache items shall be returned in the same condition as when received, reasonable wear and tear excepted. Notwithstanding the general Waiver of Claims provision, the parties agree that the receiving party shall reimburse the loaning party for cost of any items expended, lost, or destroyed.

Equipment owned and operated by a party shall be the responsibility of that party. However, notwithstanding the general Waiver of Claims provision, the parties agree that when providing support for another party, the party providing support may be reimbursed for damage or repair costs to their owned and operated equipment if the damage is directly attributed to the incident and in excess of reasonable wear and tear. These costs must be authorized using a unique request and resource order number (for example a S#). When applicable, insurance claims shall be pursued prior to requesting reimbursement.

## V. COOPERATION, STANDARDS, AND QUALIFICATIONS:

A. NATIONAL INCIDENT MANAGEMENT SYSTEM (NIMS). The parties to this agreement will operate under the concepts in the Department of Homeland Security's (DHS) National Incident Management System (NIMS). In implementing these concepts, the parties to this agreement will be expected to follow the National Wildfire Coordinating Group's (NWCG) minimum standards as defined in the Wildland Fire Qualifications Systems Guide (PMS-310) and must arrive on incident with valid qualification documentation. For initial attack action taken within the period specified as mutual aid, all agencies (federal, state, local, and Tribal) accept each other's standards. Once jurisdiction is clearly established, then the standards of the agency(s) with jurisdiction prevail.

B. STANDARDS. The parties to this agreement desire to achieve common standards within the parties' best interest, recognizing differing agency missions and mandates. Each party to this agreement recognizes that other parties' standards are reasonable, prudent,

and acceptable. Each party shall ensure that its own standards are followed. This provision does not affect a Jurisdictional Party's land management standards.

C. TRAINING. The parties to this agreement will cooperate to assure that training needs are met through provided courses or sessions that will produce safe and effective fire management. The intent is to champion high-quality training, to minimize training costs by sharing resources, and to standardize training. Each party will advise the other of applicable cross training opportunities for personnel.

D. COMMUNICATION SYSTEMS AND FACILITY ACCESS. The parties to this agreement may mutually agree to allow one another the use of communications systems such as radio frequencies, computer system access, data transmission lines, and communication sites when there is a mutual benefit to the parties to this agreement. Such arrangement shall be approved only by authorized personnel and in accordance with agency laws, regulations and policies governing security of systems and facilities.

E. INTERAGENCY MOBILIZATION AND INCIDENT BUSINESS. The parties to this agreement will adhere to guidance provided in the local Dispatch Operating Guide for ordering and mobilization of resources; and the Standards for Interagency Incident Business Management published by the National Wildfire Coordinating Group (NWCG).

F. TEXT MESSAGING WHILE DRIVING. In accordance with Executive Order (EO) 13513, "Federal Leadership on Reducing Text Messaging While Driving," any and all text messaging by Federal employees is banned: a) while driving a Government owned vehicle (GOV) or driving a privately owned vehicle (POV) while on official Government business; or b) using any electronic equipment supplied by the Government when driving any vehicle at any time. All Cooperators, their Employees, Volunteers, and Contractors are encouraged to adopt and enforce policies that ban text messaging when driving company owned, leased or rented vehicles, POVs or GOVs when driving while on official Government business or when performing any work for or on behalf of the Government.

G. PERSONNEL POLICY. Employees or volunteers of the parties to this agreement shall be subject to the personnel rules, laws and regulations of their respective agency or organization. Each party is responsible to ensure their employees and volunteers meet and maintain appropriate training and physical fitness qualifications and are equipped with personal protective equipment (PPE) to enable response to wildland fire activities.

## VI. PREPAREDNESS, PREVENTION, AND PRESCRIBED FIRE:

A. PROTECTION (OPERATING) PLAN. The parties to this agreement shall determine and document operational efficiencies for mutual aid and reimbursable fire assistance. This may include identifying firefighting resources, placement of crews, engines, water tenders, air tankers, helicopters, fixed and aerial detection, regulated use, closures, radio frequencies, dispatch procedures, and other joint fire control efforts.

B. FIRE SUPPLEMENTAL PROJECT AGREEMENTS. The parties to this agreement may plan and jointly conduct cooperative projects within the scope and purpose of this agreement. These projects may involve such activities as prescribed fire/fuels management, preparedness, fire analysis/planning, post-fire rehabilitation, training, prevention, public affairs, and other beneficial efforts in support of fire management. Nothing in this agreement obligates the parties to offer, accept, or fund any project proposals under this agreement. Any cooperative projects entered into under this agreement must be by mutual consent of the parties and documented through execution of a Fire Supplemental Project Agreement.

C. FIRE PREVENTION. The parties agree to cooperate in the development and implementation of wildland fire prevention programs. The parties agree to share responsibilities and materials for fire prevention activities. Materials may include posters for display in public buildings, businesses and the like. The parties will share responsibility for wildland fire protection and rural fire safety presentations and demonstrations.

D. FIRERESTRICTIONS AND CLOSURES. The parties will coordinate wildland fire restrictions and closures.

E. PRESCRIBED FIRE ANDHAZARDOUS FUELS MANAGEMENT. The parties to this agreement agree to communicate for planned ignitions, prescribed fire and hazardous fuels management projects.

F. SMOKEMANAGEMENT. Within their authorities, the parties to this agreement agree to cooperate in smoke management efforts for wildland fires and prescribed fires.

## VII. OPERATIONS:

A. CLOSEST FORCES CONCEPT. The guiding principle for dispatch of initial attack suppression resources is to use the closest available and appropriate resource regardless of which party owns or controls the resources, and regardless of which party has protection responsibility or jurisdiction.

B. FIRE NOTIFICATIONS. When responding to a wildland fire, the Supporting Party will, as soon as possible, notify the Protecting Party detailing what equipment and personnel have been dispatched to the incident location. If either party takes action on a wildland fire independently, the Supporting Party will furnish the Protecting Party a preliminary report (oral) within 24 hours of the action taken and a written incident report within ten (10) days.

C. BOUNDARY LINE FIRES. A boundary-line fire will be the initial attack responsibility of the Protecting Parties on either side of the boundary. Neither party will assume the other is aware of the fire or is taking action. Each party will make every reasonable effort to communicate with the other concerning the fire. When both parties have arrived at the site of the fire, the parties will mutually agree to the designation of an incident command organization.

D. INDEPENDENT ACTION. Unless otherwise stated as a special land management consideration, nothing herein shall prohibit either party, on its own initiative, from going upon lands known to be protected by the other party to this agreement to engage in suppression of wildland fires, when such fires are a threat to lands under that party's management or protection responsibility. In such instances, the party taking action will promptly notify the Protecting Party. Such actions will be commensurate with the land management considerations of the Jurisdictional Party, and subject to the laws and regulations of the Jurisdictional Party.

**Special Land Management Consideration (if applicable).**

E. ESCAPED PRESCRIBED FIRES. Wildland fires resulting from escaped prescribed fires that were ignited by, managed at the direction of, or under the supervision of one of the parties to this agreement shall be the responsibility of the Jurisdictional Party. If the parties to this agreement jointly conduct or manage a prescribed fire, the responsibility for suppression costs, should it escape, shall be agreed upon and documented. Unless otherwise agreed and documented in writing, all suppression costs and associated damages are the responsibility of the Jurisdictional Party. The parties to this agreement shall not hold each other responsible under this provision for escaped prescribed fires originating on private land, or on State or Federal lands not protected by one of the parties to this agreement.

F. PRESERVATION OF EVIDENCE. As initial action is taken on a fire, the initial attack forces will preserve information and evidence pertaining to the origin and cause of the fire.

G. ACCIDENT INVESTIGATIONS. When an accident occurs involving the equipment or personnel of a Supporting Party, the Protecting Party shall immediately notify the Jurisdictional Party. As soon as practical, the Protecting Party shall initiate an investigation of the accident. The investigation shall be conducted by a team made up of representatives from affected parties, as appropriate.

## VIII. REIMBURSEMENT AND USE OF COOPERATIVE FIRE RESOURCES:

A. LEGAL AUTHORITY – COOPERATIVE FIRE. The parties shall have the legal authority to enter into this agreement, and the institutional, managerial, and financial capability to ensure proper planning, management, and completion of the work described, which includes funds sufficient to reimburse for costs, when applicable.

B. APPROPRIATED FUND LIMITATION. Nothing in this agreement shall require the parties to this agreement to obligate, to expend funds, or to enter into any contract or other obligation for the future payment of money in excess of or in advance of appropriated funds available for payment to meet the commitments of this agreement and modifications thereto, except as specifically authorized by law.

C. COST-SHARE AGREEMENT. On multi-jurisdictional incidents and incidents which threaten or burn across protection boundaries, the parties will jointly develop and execute a written cost share agreement which describes a fair distribution of financial responsibilities. Cost shares should be reconciled, settled, and billed within 180 days from the end date of the cost share period. Only one invoice should be created by billing party for the net difference in the cost share. Once the invoice is paid, the cost share agreement is considered closed and no more settlements, invoices, or payments between the parties should occur. Any delays beyond the 180 days must be documented in writing and presented to the other party(s).

D. ELIGIBLE FIRE COSTS. All costs incurred by the Supporting Party as reimbursable fire assistance must be adequately documented as an actual expense. The parties agree that to the extent applicable, the parties will follow the cost principles and other requirements set forth in Part 200 of Title 2 of the Code of Federal Regulations. All costs must be reasonable, allowable, and allocable. Costs must be consistently treated as either direct costs or indirect costs. Consistent treatment of costs is a basic cost accounting principle and is specifically required to assure that the same types of costs are not charged as both direct costs and indirect costs. Every effort should be made to classify costs incurred for the same purpose, in like circumstances, consistently as either direct or indirect costs.

(1) Direct costs are those items of expense specifically identified with the delivery or completion of a project or program. General examples include, but are not limited to, personnel costs (salary and fringe benefits), equipment costs, travel, materials, supplies, and contracts.

(2) Indirect costs are those items of expense incurred as part of general management and administrative support of an organization. Indirect costs are proposed as a percentage (or rate) of a direct cost allocation base such as Modified Total Direct Cost (MTDC) or direct labor. Indirect costs are also referred to as administrative costs, overhead, or burden. Examples of indirect costs may include office space, computer equipment, postage, utilities, salaries for administrative activities such as procurement, personnel, accounting, and so forth.

E. INDIRECTCOST RATES -COOPERATIVE FIRE. When indirect cost rates are applied to Federal reimbursements, the parties agree to the following:

1. If the payment recipient (Cooperator) has never received or does not currently have a negotiated indirect cost rate, they are eligible for a de minimis indirect cost rate up to 10% of Modified Total Direct Costs (MTDC). MTDC is defined as all salaries and wages, fringe benefits, materials and supplies, services, travel, and contracts up to the first $25,000 of each contract.

2. For rates greater than 10%, the payment recipient (Cooperator) shall provide either an applicable negotiated indirect cost rate agreement (NICRA) from a cognizant Federal agency, or an indirect cost rate summary in a format that clearly defines the indirect cost rate and allocation base.

3. The payment recipient (Cooperator) must maintain adequate documentation to support the methodology and computation of the indirect cost rate. Documentation must be made available to the Federal agency upon request.

4. Failure to provide adequate documentation supporting the indirect cost rate may result in disallowed costs and repayment to the Federal agency.

F. FIRE PERSONNEL COSTS/RATES.

1. Personnel rates for salary, including overtime, shift premiums (if applicable), and fringe benefits must be consistent with each party's employment policy and regulations. All personnel time must be documented.

2. Reimbursement of personnel costs by the Protecting Party for employees of the Supporting Party is limited to actual time worked (beyond the mutual aid period), unless the Supporting Party is obligated via written labor agreement to pay for 24-hour shifts with periods of rest.

3. Standby personnel time is not reimbursable unless resource ordered.

4. Backfill costs are defined as the additional costs of replacement personnel (one level) to provide coverage for employees that have been mobilized to an incident. Unless otherwise documented as an additional net cost to the Supporting Party, regular time for the backfill employee is not reimbursable, only overtime costs are reimbursable.

5. Volunteers, by definition, are not employees and do not have a specified employment rate for hours worked. If, however, the Cooperator maintains written policy that provides for their volunteers to be mobilized to an incident for reimbursable assistance within the authority, scope, and terms of this agreement, the Cooperator agrees:

    a. To compensate the individuals for hours worked based on current standardized published rates for emergency firefighters in the State of **CALIFORNIA**, or at hourly rates equal to, or less than, the current Federal administratively determined (AD) pay plan.
    b. Unless exempt from Fair Labor Standards Act, these individuals will receive overtime pay for hours worked over 40 in a workweek at a rate equal to time and one half of the (base) hourly rate.
    c. Base hourly and overtime costs are reimbursable; shift premiums, fringe benefits, and backfill costs are not reimbursable.

d. The rates will only apply to incident response under the terms of this agreement and will not apply to project activities carried out supplemental to this agreement.
e. These individuals will be considered Cooperator personnel under the terms of this agreement.

G. TRAVEL COSTS. Federal Travel Regulations (FTR) and/or agency-specific travel regulations will be utilized for all travel policies and processes. Authorized travel costs, including transportation, lodging, meals, and per diem consistent with these policies and processes are reimbursable.

H. FIRE EQUIPMENT COSTS/RATES.

1. Costs incurred for agency- or Cooperator-owned equipment, including aircraft, when assigned to an incident or project may include operating expenses (such as fuel, oil, repairs, retardant) and/or a rate consistent with each party's written policy and regulations for use of the equipment.
2. Standby equipment time is not reimbursable unless resource ordered.
3. Personnel costs for operator(s) shall be applied separate from the equipment costs/rates.
4. In the absence of a pre-determined and documented rate for use of Cooperator-owned equipment, reimbursement will be limited to the current Federal Emergency Management Administration (FEMA) Schedule of Equipment Rates for like equipment, published online at: https://www.fema.gov/schedule-equipment-rates.
5. Any Cooperator equipment mobilized for reimbursable fire assistance shall be documented on an OF-297 (Emergency Equipment Shift Ticket).

I. FEDERAL EXCESS PERSONAL PROPERTY PROGRAM. Federal Excess Personal Property Program (FEPP) equipment is federal property that is loaned to the State Forester, who may place it with a local fire organization/department to improve local fire programs. If this loaned federal property is used on a federal incident or project, the Cooperator may only charge for operating costs that include maintenance, fuel, oil, etc. Costs may not include amortization, depreciation, replacement costs, modification, start-up costs, or related charges. FEPP equipment costs shall be listed separately on any invoice submitted for reimbursement.

J. CONTRACT REQUIREMENTS – COOPERATIVE FIRE. The Federal Acquisition Regulations (48 CFR) apply to all contracts awarded by a federal agency, unless otherwise exempt. Any contract awarded by the Cooperator under this agreement, where federal funding may be provided, must be awarded following the Cooperator's established procurement procedures, to ensure free and open competition, and avoid any conflict of interest (or appearance of a conflict). The Cooperator must maintain cost and price analysis documentation for potential U.S. Forest Service review. The Cooperator is encouraged to utilize small businesses, minority-owned firms, women's business enterprises and veteran owned businesses.

K. FIREBILLING CONTENT, INFORMATION, AND FINANCIAL CONTACTS.

The following items will be included with each invoice:

- Billing party's legal name, address, telephone number, and billing party's financial contact information.
- Proper reference to this U.S. Forest Service agreement number.
- Invoice date.
- Invoice number, if applicable.
- Incident name and incident number.
- Dates of the incident covered by the billing.
- Appropriate Fire code or charge code (if known).
- Summary cost data for the amount being billed.
- Cost-share agreement (if applicable).

Summary cost data should include a list of personnel, travel, and equipment expenses; and a listing by contractor/vendor name and amount spent for services and supplies procured.

Generally, cost source documents, including but not limited to, resource orders, OF-288 Emergency Firefighter Time Reports, and OF-297 Emergency Equipment Shift Tickets, will not be required with the billing content unless summary cost data is disputed.

| Financial Information and Contacts: | U.S. Forest Service | Cooperator |
|---|---|---|
| Submit bills to: | Albuquerque Service Center<br>Incident Finance<br>5141 Masthead<br>Albuquerque, NM 87109<br><br>FAX: 866-816-9532<br><br>Preferred method:<br>EMAIL<br>sm.fs.asc_coop@usda.gov | Name: Deputy Chief - Reggie Brown<br>Address: 35 Cajon Street, Suite 12 P.O. Box 3005<br>City, State, Zip: Redlands, Ca 92373<br>Telephone:909-265-6128<br>rbrown@confire.org |
| Financial Contact: (Name, phone, and email address) | ASC Incident Finance<br>Cooperative Agreements<br>877-272-7248<br>sm.fs.asc_coop@usda.gov | Deputy Chief<br>Telephone:909-265-6128<br>rbrown@confire.org |
| Local Financial or Incident Business Contact:(Name, phone, email address) | Heidi Chambers<br><br>916-640-1057<br>heidi.chambers@usda.gov | Reggie Brown<br>Telephone:909-265-6128<br>rbrown@confire.org |
| Data Universal Number System (DUNS) | 92-9332484 | 094712205 |
| Indirect Cost Rate | 15%* | 22% |

*U.S. Forest Service indirect cost rate applied in accordance with FSH1909.13Chapter40.

L. FIRE BILLING TIMEFRAMES. Except for cost-share agreement billings, the parties to this agreement will submit invoices within 60 days of the demobilization from the incident. Extensions beyond the 60 days for invoice submittal must be presented in writing to the reimbursing party. All bills will have a payment due date within 30 days after date of issuance.

M. STANDARDS FOR FINANCIAL MANAGEMENT – COOPERATIVE FIRE.

**1. Financial Reporting**

The Cooperator shall provide complete, accurate, and current financial disclosures of the project or program in accordance with any financial reporting requirements, as set forth in the financial provisions.

**2. Accounting Records**

Cooperators must maintain records for each incident or project which adequately identify the source and use of funds. These records must contain information pertaining to expenses related to each incident, unobligated balances, assets, liabilities, outlays or expenditures, and income. Such documents must be made available to the Federal Agency, Office of Inspector General, and the Government Accounting Office upon request.

**3. Internal Controls**

Effective control and accountability must be maintained for all Federal funds, real and personal property, and other assets. The Cooperator must keep written internal controls to ensure that all Federal funds received are separately and properly allocated to each incident and used solely for authorized purposes.

**4. Source Documentation**

Accounting records for each incident or project must be supported by source documentation such as cancelled checks, paid bills, payrolls, time and attendance records, equipment use and cost records, contract or subaward documents, etc. Such documents must be made available to the Federal agency upon request.

N. SYSTEM FOR AWARD MANAGEMENT REGISTRATION REQUIREMENT (SAM). The Cooperator shall maintain current organizational information and the original Unique Entity Identifier (UEI) provided for this agreement in the System for Award Management (SAM) until receipt of final payment. This requires annual review and updates, when needed, of organizational information after the initial registration. More frequent review

and updates may be required for changes in organizational information or agreement term(s). Any change to the original UEI provided in this agreement will result in termination of this agreement and de-obligation of any remaining funds. For purposes of this agreement, System for Award Management (SAM) means the Federal repository into which an entity must provide information required for the conduct of business as a Cooperative. Additional information about registration procedures may be found at the SAM Internet site at www.sam.gov.

O. OVERPAYMENT. Any funds paid to the Cooperator in excess of the amount entitled under the terms and conditions of this agreement constitute a debt to the Federal Government. The following must also be considered as a debt or debts owed by the Cooperator to the U.S. Forest Service:

- Any interest or other investment income earned on advances of agreement funds; or

- Any royalties or other special classes of program income which, under the provisions of the agreement, are required to be returned;

If this debt is not paid according to the terms of the bill for collection issued for the overpayment, the U.S. Forest Service may reduce the debt by:

1. Making an administrative offset against other requests for reimbursement.
2. Withholding advance payments otherwise due to the Cooperator.
3. Taking other action permitted by statute (31 U.S.C. 3716 and 7 CFR, Part 3, Subpart B).

Except as otherwise provided by law, the U.S. Forest Service may charge interest on an overdue debt.

## IX. GENERAL PROVISIONS:

A. PRINCIPAL CONTACTS. Individuals listed below are authorized to act in their respective areas for matters related to this agreement.

| Cooperator Program Contact | Cooperator Administrative Contact |
|---|---|
| Name: Deputy Chief - Reggie Brown<br>Address: 35 Cajon Street, Suite 12 P.O. Box 3005<br>City, State, Zip: Redlands, Ca 92373<br>Telephone: (909) 265-6128<br>Email: rbrown@confire.org | Name: Bruni Reyes<br>Address: 35 Cajon Street, Suite12 P.O. Box 3005<br>City, State, Zip: Redlands, Ca92373<br>Telephone: (909) 798-7695<br>Email: breyes@confire.org |

| **U.S. Forest Service Fire Program Contact** | **U.S. Forest Service Program – Incident Business - Contact** |
|---|---|
| Name: Forest Fire Chief– Salvador Reyes<br>Address: 602. S Tippecanoe Ave<br>City, State, Zip: San Bernardino, CA 92408<br>Telephone: 951-236-1925<br>FAX: 909-383-5770<br>Email: salvador.reyes@usda.gov | Name: Heidi Chambers<br>Address:3237PeacekeeperWay City,<br>State, Zip: McClellan, CA 95652<br>Telephone: 916-540-1057<br><br>Email: heidi.chambers@usda.gov |
| **U.S. Forest Service Administrative Contact** | |
| Name: Forest Fire Planning Chief–<br>Stephanie Childs<br>Address: 602 S. Tippecanoe Ave<br>City, State, Zip: San Bernardino, CA 92408<br>Telephone: 626-482-6681<br>FAX: 909-383-5770<br>Email: stephanie.childs@usda.gov | |

B. ASSURANCEREGARDING FELONY CONVICTION OR TAX DELINQUENT STATUS FOR CORPORATE ENTITIES. This agreement is subject to the provisions contained in the Department of Interior, Environment, and Related Agencies Appropriations Act, 2012, P.L. No. 112-74, Division E, Section 433 and 434 as continued by Consolidated and Further Continuing Appropriations Act, 2013, P.L. No. 113-6, Division F, Title I Section 1101(a)(3) regarding corporate felony convictions and corporate federal tax delinquencies. Accordingly, by entering into this agreement the Cooperator acknowledges that it: 1) does not have a tax delinquency, meaning that it is not subject to any unpaid Federal tax liability that has been assessed, for which all judicial and administrative remedies have been exhausted or have lapsed, and that is not being paid in a timely manner pursuant to an agreement with the authority responsible for collecting the tax liability, and (2) has not been convicted (or had an officer or agent acting on its behalf convicted) of a felony criminal violation under any Federal law within 24 months preceding the agreement, unless a suspending and debarring official of the United States Department of Agriculture has considered suspension or debarment is not necessary to protect the interests of the Government. If the Cooperator fails to comply with these provisions, the U.S. Forest Service will annul this agreement and may recover any funds the Cooperator has expended in violation of sections 433 and 434.

C. PROHIBITION AGAINST INTERNAL CONFIDENTIAL AGREEMENTS. All nonfederal government entities working on this agreement will adhere to the below provisions found in the Consolidated Appropriations Act, 2016, Pub. L. 114-113, relating to reporting fraud, waste and abuse to authorities:

a. The recipient (Cooperator) may not require its employees, contractors, or subrecipients seeking to report fraud, waste, or abuse to sign or comply with internal confidentiality agreements or statements prohibiting or otherwise restricting them from lawfully reporting that waste, fraud, or abuse to a

designated investigative or law enforcement representative of a Federal department or agency authorized to receive such information.

b. The recipient (Cooperator) must notify its employees, contractors, or subrecipients that the prohibitions and restrictions of any internal confidentiality agreements inconsistent with paragraph (a) of this award provision are no longer in effect.

c. The prohibition in paragraph (a) of this award provision does not contravene requirements applicable to any other form issued by a Federal department or agency governing the nondisclosure of classified information.

d. If the Government determines that the recipient is not in compliance with this award provision, it:

(1) Will prohibit the recipient's use of funds under this award, in accordance with sections 743, 744 of Division E of the Consolidated Appropriations Act, 2016, (Pub. L. 114-113) or any successor provision of law; and

(2) May pursue other remedies available for the recipient's material failure to comply with award terms and conditions.

D. TRIBAL EMPLOYMENT RIGHTS ORDINANCE (TERO). The U.S. Forest Service recognizes and honors the applicability of the Tribal laws and ordinances developed under the authority of the Indian Self-Determination and Educational Assistance Act of 1975 (PL 93-638).

E. USE OF U.S. FOREST SERVICE INSIGNIA. In order for the Cooperator to use the U.S. Forest Service insignia on any published media, such as a Web page, printed publication, or audiovisual production, permission must be granted from the U.S. Forest Service's Office of Communications (Washington Office). A written request will be submitted by the U.S. Forest Service to the Office of Communications Assistant Director, Visual Information and Publishing Services, prior to use of the insignia. The U.S. Forest Service will notify the Cooperator when permission is granted.

F. FORESTSERVICE ACKNOWLEDGED IN PUBLICATIONS, AUDIOVISUALS, AND ELECTRONIC MEDIA. The Cooperator shall acknowledge U.S. Forest Service support in any publications, audiovisuals, and electronic media developed as a result of this agreement.

G. NONDISCRIMINATIONSTATEMENT – PRINTED, ELECTRONIC, OR AUDIOVISUAL MATERIAL. The Cooperator shall include the following statement, in full, in any printed, audiovisual material, or electronic media for public distribution developed or printed with any Federal funding.

***"In accordance with Federal law and U.S. Department of Agriculture policy, this institution is prohibited from discriminating on the basis of race, color, national origin, sex, age, or disability. (Not all prohibited bases apply to all programs.)***

To file a complaint alleging discrimination, write USDA, Director, Office of Civil Rights, 1400 Independence Avenue, SW, Washington DC 20250-9410 or call toll free voice (866) 632-9992, TDD (800)877-8339, or voice relay (866) 377-8642. USDA is an equal opportunity provider and employer."

If the material is too small to permit the full statement to be included, the material must, at minimum, include the following statement, in print size no smaller than the text:

***"This institution is an equal opportunity provider."***

H. NOTICES. Any communications affecting the operations covered by this agreement given by the U.S. Forest Service or the Cooperator are sufficient only if in writing and delivered in person, mailed, or transmitted electronically by e-mail or fax, as follows:

To the U.S. Forest Service Program Contact, at the address specified in this agreement.

To the Cooperator Program Contact, at the address shown in this agreement.

Notices are effective when delivered in accordance with this provision, or on the effective date of the notice, whichever is later.

I. AVAILABILITY FOR CONSULTATION. Both parties agree to be available at mutually agreeable times, for continuing consultation to discuss the conditions covered by this agreement and agree to actions essential to fulfill its purposes.

J. PARTICIPATION IN SIMILAR ACTIVITIES. This agreement in no way restricts the U.S. Forest Service or the Cooperator from participating in similar activities with other public or private agencies, organizations, and individuals.

K. REMEDIES FOR COMPLIANCE RELATED ISSUES – COOPERATIVE FIRE. If either party materially fail(s) to comply with any term of the agreement, whether stated in a Federal statute or regulation, an assurance, or the agreement, either party may wholly or partly suspend or terminate the current agreement.

L. ENDORSEMENT. Any of the Cooperator's contributions made under this agreement do not by direct reference or implication convey U.S. Forest Service endorsement of the Cooperator's products or activities and does not by direct reference or implication convey the Cooperator's endorsement of the U.S. Forest Service's activities.

M. MEMBERS OF CONGRESS. Pursuant to 41 U.S.C. 22, no member of, or delegate to, Congress shall be admitted to any share or part of this agreement, or benefits that may arise therefrom, either directly or indirectly.

N. NONDISCRIMINATION. The U.S. Department of Agriculture (USDA) prohibits discrimination in all its programs and activities on the basis of race, color, national origin, age, disability, and where applicable, sex, marital status, familial status, parental status, religion, sexual orientation, genetic information, political beliefs, reprisal, or because all or a part of an individual's income is derived from any public assistance program. (Not all prohibited bases apply to all programs.) Persons with disabilities who require alternative means for communication of program information (Braille, large print, audiotape, and so forth) should contact USDA's TARGET Center at (202) 720-2600 (voice and TDD). To file a complaint of discrimination, write to USDA, Director, Office of Civil Rights, 1400 Independence Avenue, S.W., Washington, D.C. 20250-9410 or call (800) 795-3272 (voice) or (202) 720-6382 (TDD). USDA is an equal opportunity provider and employer.

O. ELIGIBLE WORKERS. The Cooperator shall ensure that all employees complete the I-9 form to certify that they are eligible for lawful employment under the Immigration and Nationality Act (8 USC 1324a). The Cooperator shall comply with regulations regarding certification and retention of the completed forms. These requirements also apply to any contract awarded under this agreement.

P. AGREEMENT CLOSEOUT – COOPERATIVE FIRE. Within 120 days after expiration date or notice of termination, the parties shall reconcile for final billing/payments and close the agreement.

Q. PROGRAM MONITORING – COOPERATIVE FIRE. The parties to this agreement shall monitor the performance of the agreement activities to ensure that performance goals are being achieved. The parties to this agreement will meet annually to review matters of mutual concern. Program performance reports are not required for emergency response activities.

R. RETENTIONAND ACCESS REQUIREMENTS FOR RECORDS. The Cooperator shall retain all records pertinent to this agreement for a period of no less than 3 years from the expiration or termination date. As used in this provision, records include books, documents, accounting procedures and practice, and other data, regardless of the type or format. The Cooperator shall provide access and the right to examine all records related to this agreement to the U.S. Forest Service, Inspector General, or Comptroller General or their authorized representative. The rights of access in this section must not be limited to the required retention period but must last as long as the records are kept.

If any litigation, claim, negotiation, audit, or other action involving the records has been started before the end of the 3-year period, the records must be kept until all issues are resolved, or until the end of the regular 3-year period, whichever is later.

Records for nonexpendable property acquired in whole or in part, with Federal funds must be retained for 3 years after its final disposition.

S. FREEDOM OF INFORMATION ACT (FOIA). Public access to award or agreement records must not be limited, except when such records must be kept confidential and would have been exempted from disclosure pursuant to Freedom of Information regulations (5 U.S.C. 552). Requests for research data are subject to 2 CFR 215.36.

Public access to culturally sensitive data and information of Federally-recognized Tribes may also be explicitly limited by P.L. 110-234, Title VIII Subtitle B §8106 (2008 Farm Bill).

T. TERMINATION – COOPERATIVE FIRE. Either party shall have the right to terminate their participation under this agreement in whole, or in part, at any time before the date of expiration by providing 90 days written notice to the other party. If the agreement is terminated, the parties shall agree to the terms of the termination, including costs attributable to each party and the disposition of awarded or pending actions. If a party incurs costs due to the other party's failure to give the requisite notice of its intent to terminate the agreement, the Protecting party shall pay any actual costs incurred by the Supporting Party as a result of the delay in notification, provided such costs are directly attributable to the failure to give notice.

U. ALTERNATE DISPUTE RESOLUTION. In the event of any issue of controversy under this agreement, the parties may pursue Alternate Dispute Resolution procedures to voluntarily resolve those issues. These procedures may include, but are not limited to conciliation, facilitation, mediation, and fact finding.

V. DEBARMENT AND SUSPENSION. The Cooperator shall immediately inform the U.S. Forest Service if they or any of their principals are presently excluded, debarred, or suspended from entering into covered transactions with the Federal Government according to the terms of 2 CFR Part 180. Additionally, should the Cooperator or any of their principals receive a transmittal letter or other official Federal notice of debarment or suspension, then they shall notify the U.S. Forest Service without undue delay. This applies whether the exclusion, debarment, or suspension is voluntary or involuntary.

W. MODIFICATIONS – COOPERATIVE FIRE. Modifications within the scope of this agreement must be made by mutual consent of the parties, by the issuance of a written modification signed and dated by all properly authorized, signatory officials, prior to any changes being performed. Requests for modification should be made, in writing, at least 30 days prior to implementation of the requested change. No party is obligated to fund any changes not properly approved in advance.

X. COMMENCEMENT/EXPIRATIONDATE – COOPERATIVE FIRE. This agreement is executed as of the date of the last signature and is **effective through October 30, 2026 at which time it will expire**, unless extended by an executed modification, signed and dated by all properly authorized, signatory officials.

If this agreement expires during an incident, the terms of this agreement will apply until the end of the incident. The parties must execute a written modification within 30 days following the incident to properly document the time extension. No other changes shall be retroactively applied for this time extension.

All Fire Supplemental Project Agreements must be completed within the timeframe of this agreement. However, if this agreement is replaced or superseded by a new agreement, current Fire Supplemental Project Agreements may remain in effect to the extent they do not conflict with the provisions of the new agreement, but only until such time that the Fire Supplemental Project Agreements can be completed or modified to be incorporated under the terms of the new agreement.

Y. AUTHORIZED REPRESENTATIVES. By signature below, each party certifies that the individuals listed in this document as representatives of the individual parties are authorized to act in their respective areas for matters related to this agreement. In witness whereof, the parties hereto have executed this agreement as of the last date written below.

MARIO SAUCEDO, Mayor — Date
City of Redlands

RICH SESSLER, Fire Chief — Date
Redlands Fire Department

DANELLE D. HARRISON, Forest Supervisor — Date
U.S. Forest Service, San Bernardino National Forest

The authority and format of this agreement have been reviewed and approved for signature.

DARIUS PARKS — Digitally signed by DARIUS PARKS Date: 2025.08.04 17:49:02 -07'00'

DARIUS PARKS — Date
U.S. Forest Service, Grants Management Specialist

**Paperwork Reduction Act Statement**

According to the Paperwork Reduction Act of 1995, an agency may not conduct or sponsor, and a person is not required to respond, to a collection of information unless it displays a valid OMB control number. Persons are not required to respond to this collection of information unless it displays a currently valid OMB control number. The OMB control number for this information collection is 0596-0217. Response to this collection of information is mandatory. The authority to collect the information Section 7 of the Granger-Thye Act (16 U.S.C. 580d) and Title IV of the Federal Land Policy and Management Act of 1976 (43 U.S.C. 1751-1753). The time required to complete this information collection is estimated to average 4 hours per response, including the time for reviewing instructions, searching existing data sources, gathering, and maintaining the data needed and completing and reviewing the collection of information. Send comments regarding this burden estimate or any other aspect of this collection of information, including suggestions for reducing this burden, to: U.S. Department of Agriculture, Clearance Officer, OIRM, 1400 Independence Avenue, SW, Room 404-W, Washington, D.C. 20250; and to the Office of Management and Budget, Paperwork Reduction Project (OMB# 0596-0217), 725 17th Street NW, Washington, D.C. 20503.

In accordance with Federal civil rights law and U.S. Department of Agriculture (USDA) civil rights regulations and policies, the USDA, its Agencies, offices, and employees, and institutions participating in or administering USDA programs are prohibited from discriminating based on race, color, national origin, religion, sex, gender identity (including gender expression), sexual orientation, disability, age, marital status, family/parental status, income derived from a public assistance program, political beliefs, or reprisal or retaliation for prior civil rights activity, in any program or activity conducted or funded by USDA (not all bases apply to all programs). Remedies and complaint filing deadlines vary by program or incident.

Persons with disabilities who require alternative means of communication for program information (e.g., Braille, large print, audiotape, American Sign Language, etc.) should contact the responsible agency or USDA's TARGET Center at (202) 720-2600 (voice and TYY) or contact USDA through the Federal Relay Service at (800) 877-8339. Additionally, program information may be made available in languages other than English.

To file a program discrimination complaint, complete the USDA Program Discrimination Complaint Form, AD-3027, found online at How to File a Program Discrimination Complaint and at any USDA office or write a letter addressed to USDA and provide in the letter all of the information requested in the form. To request a copy of the complaint form, call (866) 632-9992. Submit your completed form or letter to USDA by: (1) mail: U.S. Department of Agriculture, Office of the Assistant Secretary for Civil Rights, 1400 Independence Avenue, SW, Washington, D.C. 20250-9410; (2) fax: (202) 690-7442; or (3) email: program.intake@usda.gov.

USDA is an equal opportunity provider, employer, and lender.

The Privacy Act of 1974, 5 U.S.C. 552a and the Freedom of Information Act, 5 U.S.C. 552 govern the confidentiality to be provided for information received by the Forest Service.

**Exhibit A – Map of Protection Areas and Boundaries**

# EXHIBIT A – Map of Protection Areas and Boundaries

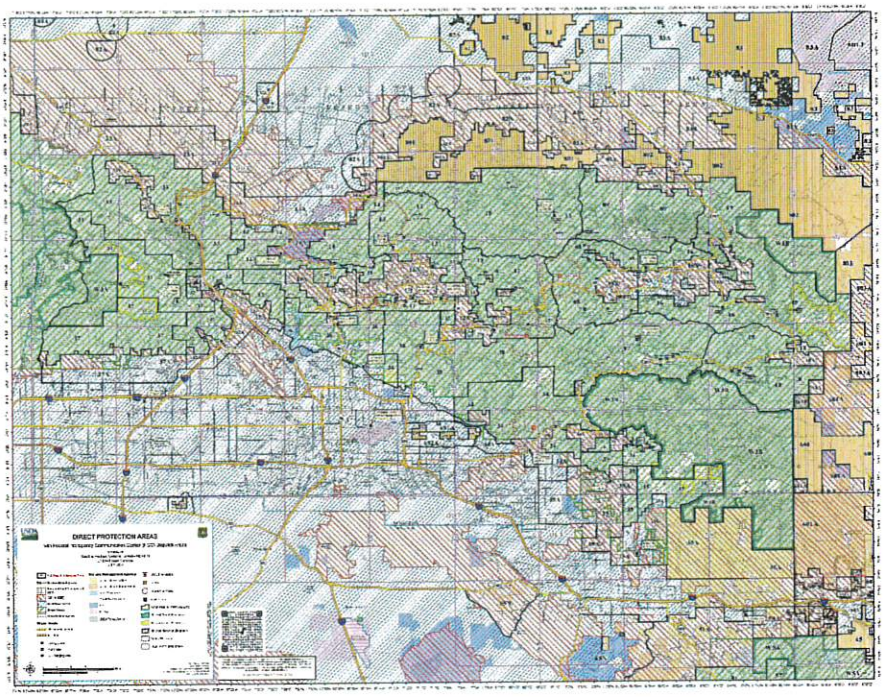

## EXHIBIT B – Protection (Operating) Plan

Instructions: The format of this exhibit is not defined. However, the exhibit shall only include programmatic, operational information for preparedness and protection planning that meets the scope and purpose of the agreement. This exhibit shall not include any information that contradicts the terms and conditions of the agreement. If reimbursable rates are identified in this exhibit, they must be applied in accordance with the terms of the agreement.

**Exhibit B**
**OPERATINGPLAN**
**FOR COOPERATIVE FIRE PROTECTION AGREEMENT**
**Between**
**The REDLANDS FIRE DEPARTMENT**
**and**
**U.S. FOREST SERVICE SAN BERNARDINO NATIONAL FOREST**

## OPERATING PLAN

The Parties will meet annually to review the Operating Plan (OP) prior to the initiation of fire season. Any required changes to the OP will be documented by a modification to agreement 25-FI-11051200-005. The OP will include lists of principal personnel, dispatching procedures, and any other items identified in the Agreement as necessary for efficient implementation and use. The OP will become a part of the Cooperative Fire Protection Agreement (CFPA). The OP commences as of the date of the last signature on the CFPA and will remain in effect until superseded by a new OP or upon expiration of the CFPA. On incidents, the Supporting Party shall furnish the Protecting Party, upon demand, a signed copy of the CFPA and current OP.

## MUTUAL AID RESPONSE PROCEDURES

Mutual aid is the initial attack response by both The Department and U.S. Forest Service suppression resources that are identified in each Party's Emergency Command Center's run cards or computerized automated dispatch system (CAD). The Protecting Party will not be required to reimburse the Supporting Party for initial attack actions taking place in these areas within the First **12 hours** (as identified in the Agreement) following initial dispatch of suppression resources. All assistance beyond this "Mutual Aid" period will be reimbursable fire assistance. After the mutual aid period has been exceeded, reimbursable fire assistance will revert back to the original time of dispatch.

The U. S. Forest Service agrees to send the following resources initial attack response (minimum):

| High Response Level | Moderate Response Level | Low Response Level |
|---|---|---|
| 5 - Type 3 Engines | 3 - Type 3 Engines | 1 - Type 3 Engine |
| 2 - Hand crews (as available) | 1 - Fire Prevention / Patrol Unit | Or |
| 1 – Water Tender | 1 - Chief Officer | 1 - Fire Prevention / Patrol Unit |
| 1 - Fire Prevention / Patrol Unit | | |
| 1 - Chief Officer | | |

Any resources beyond this will be negotiated as reimbursable fire assistance. When the U. S. Forest Service is at draw down, resources dispatched will be modified.

The Department agrees to send the following resources to the U.S. Forest Service as Automatic Aid to areas within the defined Mutual Aid Zone (MAZ).

| High Response Level | Moderate Response Level | Low Response Level |
|---|---|---|
| 2 - Type 3 Engines | 1 - Type 3 Engine | 1 - Type 3 Engine |
| 1 – Water Tender | 1 – Water Tender | |
| 1 - Chief Officer | 1 - Chief Officer | |
| | | |
| | | |
| | | |

When the Department is at draw down, resources dispatched may be modified. An aerial drone may be available to the U.S. Forest Service upon request when available.

Aircraft (fixed and rotary-winged) including pilot(s) shall always reimbursable fire assistance, EXCEPT when the response is under a unified command and the fire threatens both local and federal jurisdictions. Fiscal responsibility for all aircraft will be determined by the ordering process, utilization and cost share agreements.

## DESCRIPTION OF U.S. FOREST SERVICE DIRECT PROTECTION AREA (DPA)

EXHIBIT A

The U.S. Forest Service has the responsibility for prevention, protection, and suppression of wildland fires on National Forest administered lands, and on adjacent or intermingled State and private forested lands as identified through CFPA.

The Department agrees to send resources to the U.S. Forest Service as Automatic Aid to areas within the defined Mutual Aid Zone (MAZ) with no reimbursement for the first 12 HOURS.

## DESCRIPTION OF THE DEPARTMENT's DIRECT PROTECTION AREA (DPA)

EXHIBIT B

The Department has the responsibility for prevention, protection and suppression of structure and other non-Wildland fires within the established fire district. These structures and lands protected by the Department are intermingled or adjacent to lands protected by the U.S. Forest Service.

## CLOSEST FORCES

The Department and the U.S. Forest Service agree to adopt the "Closest Forces" concept for initial attack. This philosophy dictates that the closest available appropriate resource regardless of ownership shall be utilized initially. The emphasis to get the closest appropriate resources to respond to initial attack fires is in the best interest of both Parties. This concept of "Closest Forces" will also be applied to ongoing incidents whenever there is a critical and immediate need for the protection of life and property. Beyond initial attack, the "Closest Forces" concept is modified, and the Protecting Party will request the most appropriate resource to aid in the suppression of a wildfire.

## SINGLE POINT RESOURCE ORDERING

All requests for emergency assistance and incident support must be clear and precise and shall be processed and recorded through a single dispatching center identified by the Incident Commanders of both Parties (Unified Command) and supported by order and request numbers. Any resources ordered outside of the Unified Ordering Point (UOP) will be considered voluntary contribution to the incident and will not seek reimbursement.

When ordering resources, it should be identified on the resource order, under "special considerations," when ordering for a specific agency mission need, even if/when going through another agency ordering point.

## COMMUNICATIONSAND FREQUENCY MANAGEMENT

The Parties agree to utilize the frequencies assigned by the Emergency Command Centers for the management of an incident. This includes the assigned Command and Tactical Frequencies. In the case where the Parties' administrative frequencies have not been assigned for those purposes, the use of those frequencies must be temporarily suspended. While away from the home geographic area and traveling to and from an incident, the Parties agree to suspend the use of their respective pre- assigned frequencies. These frequencies are licensed through the Federal Communications Commission for specific geographic areas and are not to be used outside those areas. Family recreational "walkie-talkie" type radios are prohibited from use while traveling to and from an incident or while on any federal incident.

## SHARING FREQUENCIES

The Department/U.S. Forest Service authorizes the use of the following frequencies. These frequencies will be used for fire/emergency only within or adjacent to the Department's responsibility area.

## CICCS / ICS QUALIFIED LIST

The list of qualified personnel is maintained by the Department's Command /Dispatch Center. The resources may be available on a reimbursable fire assistance basis depending on Party's drawdown and commitments.

## THE USE OF TRAINEES

Both Parties agree to the use of trainees when practical; however, the automatic dispatch of or use of trainees will not occur without prior approval of the hosting unit or Incident Commander.

All Department trainees will be the cost responsibility of the sending unit.

## STRUCTURE DEFENSE

When the local agency's resources are exhausted and need to be augmented for structure defense, as determined and negotiated by the unified incident commanders in consultation with

Agency Representative and Agency Administrator, the Federal Agency having DPA responsibility may bear the cost of the augmentation.

**REIMBURSEMENT Personnel, Equipment & Aircraft- Outlined in agreement**

**under: VIII REIMBURSEMENT AND USE OF COOPERATIVE FIRE**

**RESOURCES:**

For Reimbursement under the terms of this CFPA all resource orders must be dispatched and processed by the SAN BERNARDINO NATIONAL FOREST, Communication Center, when not in Unified Command. Any request not dispatched or processed by this ECC will not be reimbursed under this local agreement.

**U.S. Forest Service Personnel, Equipment and Agency owed Aircraft:**

Reimbursable U.S. Forest Service costs will include actual costs associated with the direct fire operations and incident support ordered by or for the incident (except as otherwise described as reciprocal initial attack as identified herein, and independent action situations). The Department will be billed for support to incidents that are the jurisdictional responsibility of the Department.

The Administrative Rate for the U.S. Forest Service is published in the agency's Annual Program Direction.

**Federal Excess Property Program (FEPP) Equipment**

Under the FEPP program, FEPP rates apply when federal property is loaned to the State Forester, who may place it with local fire departments to improve local fire programs. If this loaned federal property is used on a U.S. Forest Service incident, the Department will only charge the U.S. Forest Service operating costs that include maintenance, fuel, oil, etc. Charges may not include amortization, depreciation, replacement costs, modification start-up costs, or related charges.

## WHERE TO SEND REIMBURSEMENT INVOICES

Invoices for services under this agreement must be sent electronically to the following addresses as appropriate. This address supersedes any invoice mailing address which may be reflected in the existing cooperative agreement.

| U.S. Forest Service | Redlands Fire Department |
|---|---|
| Name: Planning Chief – Stephanie Childs<br>Address: 602 S. Tippecanoe Ave.<br>City, State, Zip: San Bernardino, CA 92408<br>Telephone: 909-382-2631<br>Fax: 909-383-5770<br>Email: stephanie.childs@usda.gov | Name: Deputy Chief - Reggie Brown<br>Address: 35 Cajon Street, Suite 12<br>P.O. Box 3005<br>City, State, Zip: Redlands, Ca 92373<br>Telephone: 909-265-6128<br>FAX: N/A<br>Email: rbrown@confire.org |

## ITEMS NOT REIMBURSABLE

The following items are not reimbursable in the execution of this Agreement and are considered standard personal support supply/equipment.

- Laptop Computers
- Incident position support kits
- Calculators
- Printers
- GPS units
- Cell phones (except as provided below)
- Personal telephone charges
- Support items normally available in Supply Unit, e.g. tents, sleeping bags, pads, water coolers, etc.

## DURATION OF ASSIGNMENTS

Consideration must be given to the health and safety of personnel when assigned to fires of long duration. It is agreed that duration of assignments is dictated by each Party's policy. Extension of assignments beyond the Supporting Party's policy may be requested. It is the responsibility of the Protecting Party to request relief personnel in advance of the Supporting Party's policy time limit.

The Protecting Party is further responsible for the transportation costs of moving personnel to the fire and returning those relieved personnel back to their home stations. In all cases, the Department and U.S. Forest Service agree that their Incident Commanders will release suppression resources to their primary mission responsibilities as soon as priorities allow.

## REST AND RECUPERATION

The National Wildfire Coordinating Group (NWCG) establishes Rest and Recuperation (R & R) guidelines that govern R & R on all Federal incidents. These guidelines may change throughout the year depending on fire activity and physical condition of fire resources. Department personnel assigned to a U.S. Forest Service incident may be given R & R during the incident in which case the R & R is in pay status and charged against the incident. However, if the Department wishes to grant their personnel R & R upon their return to home, the R & R is not compensable under the terms of this agreement.

## AIR BOTTLE SUPPORT

The Department agrees to refill breathing apparatus bottles when requested by the U.S. Forest Service subject to compliance with all laws and policies pertaining apparatus.

## NON-WILDFIRE INCIDENTS

The Department has jurisdictional responsibility for all non-wildfire emergencies within its protection area even when these areas include U.S. Forest Service DPA. The only exceptions are For those emergency incidents under the jurisdiction of the California Highway Patrol, County Sheriff, California Department of Fish & Game and the U.S. Coast Guard.

## FIRE PREVENTION

**JOINT PRESS RELEASES** Develop joint press releases on cooperative fire protection issues to ensure that the interests of both Parties are adequately addressed.

**SMOKEY BEAR PROGRAM** The Parties will cooperate in the delivery of Smokey Bear programs.

**LOCAL EDUCATION PROGRAMS** The Parties agree to cooperatively conduct local school and other fire prevention education programs.

**FIRE PREVENTION SIGNS** Coordination and placement of fire prevention signs should be coordinated by both Parties in order to prevent duplication of effort and sending mixed messages. This is especially important for fire danger rating signs.

**LOCAL EVENTS** The Parties agree to cooperative conduct fire prevention programs at local community events.

## BURNING AND CAMPFIRE PERMITS

In accordance with current instructions, permits for campfire (CDF form LE-63), dooryard premises burning (CDF form LE-62), and other burning (CDF form LE-5) (except vegetation management program and brushland conversion burning (CDF form LE;-7) on State Responsibility lands in Federal Agency DPAs will be issued by the Federal Agency

or local fire protection district personnel authorized to do so by the Director of CDF. If both parties' personnel are authorized to issue campfire and burning permits by CDF, both Parties agree to issue burning and campfire permits for each other's DPAs. Both Parties agree to notify one another when bum permits are issued. Fire Restrictions, Red Flag or other situations that may affect the safe execution of campfire and/or burn permits will be shared by each Party.

## NON-FIRE PROJECT USE OF RESOURCES

Each of the Parties may jointly conduct appropriate mutual interest projects. These projects may include but not limited to hazardous fuels reduction (i.e.: prescribed fire burn and prep., thinning, etc.) and facility/compound maintenance. Any shared cost or reimbursement will be governed in accordance with a Supplemental Project Agreement signed by each Party prior to the start of the project.

## WILDLAND FIRE DECISION SUPPORT SYSTEM (WFDSS)

U.S. Forest Service policy requires the use of "Wildland Fire Decision Support System" (WFDSS) for all fires on or threatening U.S. Forest Service administered lands that have escaped initial attack. In Unified Command situations the U.S. Forest Service will include the Department's input into the development of control objectives, strategy and priorities.

## REPAIR OF SUPPRESSION ACTIVITY DAMAGE

Repair of suppression related activity damage (e.g., spreading of dozer berms, installations of water bars, minor road repairs, minor fence repair, etc.) will normally be done by the Party with direct protection responsibility for the fire as an integral part of overhaul/mop-up. Any rehabilitation beyond this level may be the responsibility of the landowner.

## MAPS TO SUPPORT ANNUAL OPERATING PLAN

On an as needed basis, maps needed to support this OP will become attachments to the OP as Exhibit A through a modification to the CFPA. These may include the DPA boundary, fire protection facilities by Party and location, pre-planned "Mutual Aid" initial attack response areas, "Mutual Aid Move-up and Cover" facilities or special management consideration areas.

**APPROVAL:**

IN WITNESS WHEREOF, the Parties have executed this Operating Plan as of the last date written below:

XXX, FIRE CHIEF
Redlands Fire Department

Date

Danelle D. Harrison, FOREST SUPERVISOR
U.S. Forest Service, San Bernardino National Forest

Date

The authority and format of this instrument have been reviewed and approved for signature.

XXXXXX
U.S. Forest Service Grants Management Specialist

Date

# APPENDIX A

## San Bernardino National Forest DPA MAP

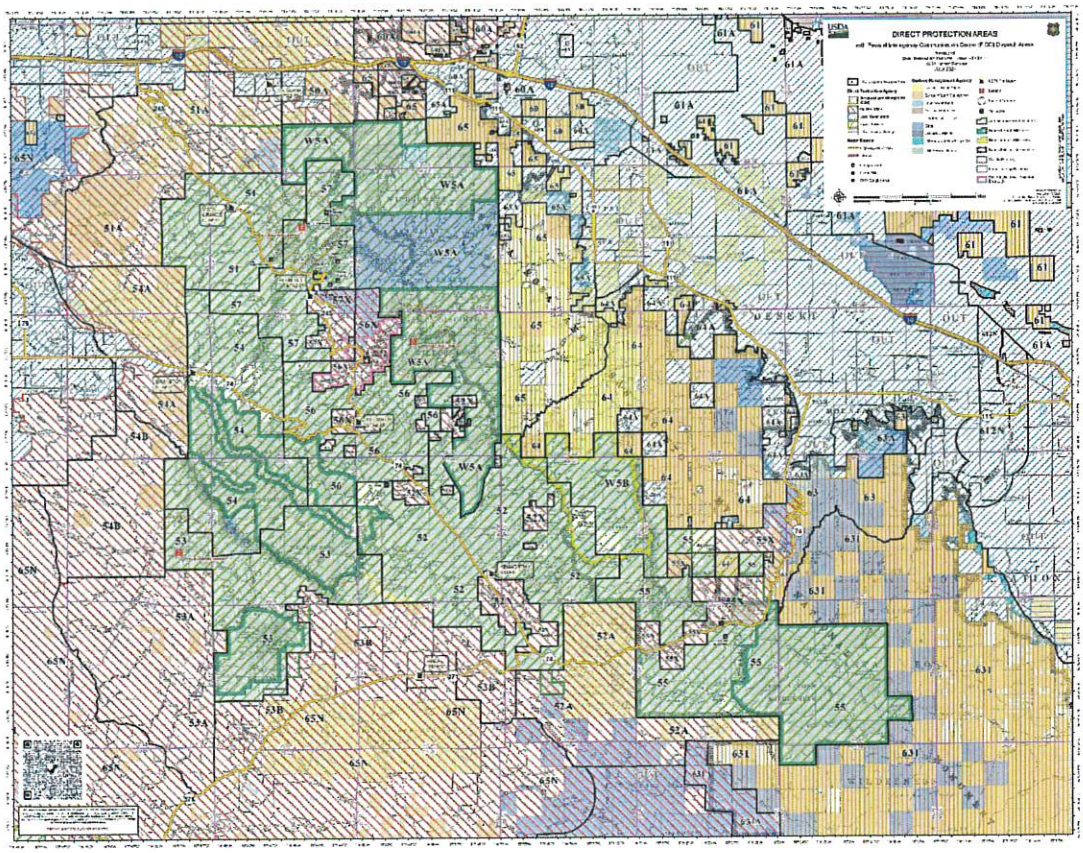

# APPENDIX B

## LRA DPA MAP

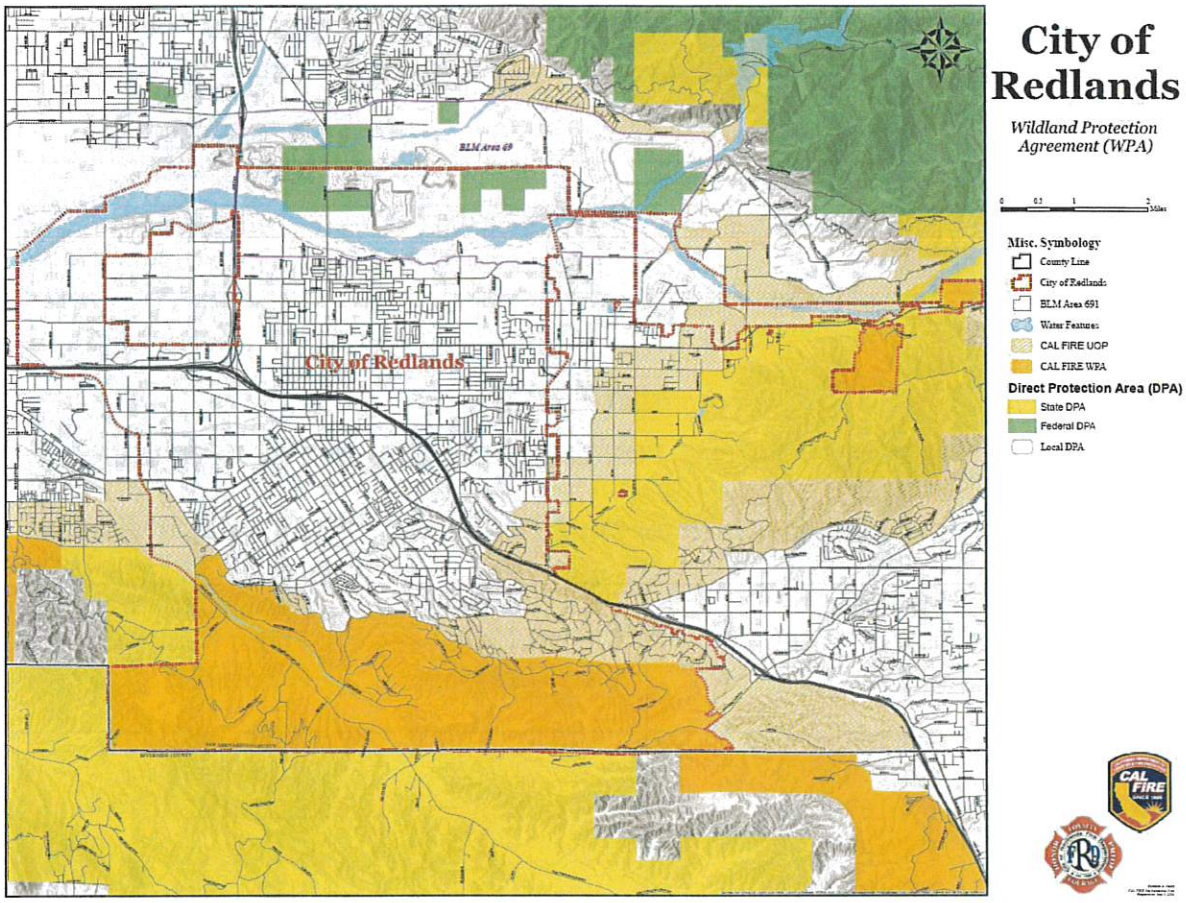

## APPENDIX C

## REDLANDS FIRE DEPARTMENT FREQUENCY ASSIGNMENTS

The Department agrees to authorize use by the Forest Service of the following frequencies

| | | | |
|---|---|---|---|
| **Command** | 2-CMD-3 (800) MHz | | Comm Center Dispatch |

| | | | |
|---|---|---|---|
| **Tactical** | **RX** 153.8300 | **TX** 153.8300 | BDCV15 |
| | **RX** 154.7325 | **RX** 154.7325 | BDCV17 |

## APPENDIX D

## SAN BERNARDINO NATIONAL FORETREST FREQUENCY ASSIGNMETNS

The Forest Service agrees to authorize use by the Department of the following frequencies:

| | | | |
|---|---|---|---|
| **Command** | **RX** 171.4750<br>**RX** 171.4750<br>**RX** 172.2250 | **TX** 171.4750<br>**TX** 168.1500<br>**TX** 164.1375 | Forest Net Direct<br>Forest Net Repeat<br>Admin Net |
| **Tactical** | **TX** 168.2000<br>**TX** 166.5500<br>**TX** 167.1125<br>**TX** 169.1125<br>**TX** 168.4875 | | NIFC Tac 2<br>R5 Tac 4<br>R5 Tac 5<br>R5 IA Air to Grnd 59<br>R5 IA Air to Grnd 53 |

These frequencies will be used for fire/emergency only within or adjacent to the Forest Service's responsibility area.

## APPENDIX E

REDLANDS FIRE DEPARTMENT CHIEF OFFCER & CONTACTS

***HEADQUARTERS OFFICE***
***35 Cajon Street, Suite 12***
***Redlands, CA 92373 (909) 798-7600***

| *Name* | *Rank* | *Office Phone* | *Cell Phone* | *Email* |
|---|---|---|---|---|
| Rich Sessler | Fire Chief 700 | (909) 798-7604 | (909) 714-1795 | rsessler@confire.org |
| Reggie Brown | Deputy Chief 701 | (909) 798-7693 | (909) 265-6128 | rbrown@confire.org |
| Dave Denman | Battalion Chief 705 | (909) 798-7605 | (909) 742-2067 | ddenman@confire.og |
| Dave Ketcherside | Battalion Chief 704 | (909) 798-7600 | (909) 233-9041 | dketcherside@confire.org |
| Nathan Bristol | Battalion Chief 706 | (909) 798-7600 | (909) 836-4609 | nbristol@confire.org |
| Josh Hannan | Battalion Chief 707 | (909) 798-7600 | (909) 742-2080 | jhannan@confire.org |

# APPENDIX F

## U.S. FOREST SERVICE DUTY & LINE OFFICER CONTACTS

| | | | | | |
|---|---|---|---|---|---|
| *Supervisor's Office Fire Staff* | 909.382.2600 | *San Bernardino ATB* | 909.382.2989 | | |
| | | *FICC Dispatch* | 909.383.5654 | Emergency 909.383.5651 | |
| NAME | CALL SIGN | POSITION | WORK | MOBILE | EMAIL ADDRESS |
| Sal Reyes | Chief 1 | Forest Fire Chief | 909.382.2630 | 951.236.1925 | salvador.reyes@usda.gov |
| Josh Boehm | Chief 2 | Deputy Forest Fire Chief (Operations) | 909.382.2629 | 909.454.5348 | joshua.boehm@usda.gov |
| Lauren Blake | Chief 3 | Deputy Forest Fire Chief (Fuels) | 909.382.2996 | 951.573.6065 | lauren.blake@usda.gov |
| Michael Troxel | Division 6 | FICC Center Manager | 909.383.5651 | 909.495.7363 | michael.troxel@usda.gov |
| Doug Ross | Division 7 | Aviation Officer | 909.382.2994 | 951.288.5372 | doug.ross@usda.gov |
| Stephanie Childs | Division 9 | Fire Mgmt. Planning Specialist | 909.382.2631 | 626.482.6680 | stephanie.childs@usda.gov |
| Vacant | Information | Forest Information | | | |
| Vacant | Safety 1 | Forest Safety and Risk Mgmt. | | | |
| *Mountaintop Division* | | *West (Sky Forest Office)* | 909.382.2758 | | |
| | | *East (Fawnskin Office)* | 909.382.2790 | | |
| Michael Page | Division 1 | Division Chief | 9093382.2893 | 909.486.1718 | michael.j.page@usda.gov |
| Vacant | Battalion 11 | West Battalion | | | |
| Brian Grant | Battalion 12 | Prevention/Fuels Battalion | 909.382.2802 | 909.806.0385 | brain.grant3@usda.gov |
| Mike Koontz | Battalion 13 | East Battalion | 909.382.2772 | 951.315.5849 | micheal.koontz@usda.gov |
| *Front Country Division* | | *West (Lytle Creek Office)* | *909.382.2850* | | |
| | | *East (Mill Creek Office)* | *909.382.2881* | | |
| Vacant | Division 3 | Division Chief | | | |
| Nate Leatherman | Battalion 31 | West Battalion | 909.797.6046 | 909.486.1716 | nathan.leatherman@usda.gov |
| Jeffrey Stitt | Battalion 32 | Protection/Fuels Battalion | 909.382.2986 | 661.478.2136 | jeffrey.stitt@usda.gov |
| Vacant | Battalion 33 | East Battalion | | | |
| *San Jacinto Division* | | *Idyllwild Office* | *909.382.2930* | | |
| Chris Fogle | Division 5 | Division Chief | 909.659.3926 | 909.238.2107 | chris.fogle@usda.gov |
| Vacant | Battalion 51 | Suppression Battalion | | | |
| Avdul Pula | Battalion 52 | Prevention/Fuels Battalion | 951.659.2614 | 909.486.1702 | avdula.pula@usda.gov |
| Vacant | Battalion 53 | Suppression Battalion | | | |
| *Forest Service Line Officers* | | | | | |
| Name | | Position | Work | Mobile | |
| Danelle Harrison | Supervisor 1 | Forest Supervisor | 909.382.2600 | | danelle.harrison@usda.gov |
| Jamahl Butler | Supervisor 2 | Deputy Forest Supervisor | 909.382.2603 | | nicholas.j.butler@usda.gov |
| Vacant | Ranger 1 | District Ranger | | | |
| Michael Nobels | Ranger 3 | District Ranger | 909.382.2629 | 951.204.0165 | mike.nobles@usda.gov |
| Annamarie Santana | Ranger 5 | District Ranger | | 909.663.7705 | annamarie.santana@usda.gov |

**Exhibit C – Fire Supplemental Project Agreement**

| | |
|---|---|
| FS Supplemental Project Agreement No. | (a) |
| Cooperator Project Agreement No. | (b) |

**FIRE**
**SUPPLEMENTAL PROJECT AGREEMENT**
**Between**
(c)
**And**
(d)

This Fire Supplemental Project Agreement (SPA) is hereby made and entered into by and between (e) , hereinafter referred to as "the Cooperator," and (f) , hereinafter referred to as the U.S. Forest Service under the Reciprocal Fire Protection Act of May 27, 1955, (42 U.S.C. 1856a) and under the provisions of the Local Cooperative Fire Protection Agreement No. (g) , executed between the Parties.

Project Title: (h)

## I. BACKGROUND:

As referenced above, the Parties entered into a Local Cooperative Fire Protection Agreement. The Agreement allows the parties to cooperatively conduct projects or share resources for fire protection and prevention, which includes such activities as prescribed fire/fuels management, preparedness, fire analysis/planning, rehabilitation, training, prevention, public affairs, and other beneficial efforts in support of fire management.

## II. PURPOSE:

The purpose of this SPA is to document the Parties' contributions and cooperation regarding (i) . This project is further described in the hereby incorporated Financial and Project Plans, attached as Exhibits (j) .

## III. THE COOPERATOR SHALL:

A. Perform in accordance with the terms of this SPA and with the Financial and Project Plans, Exhibits (j) .

B. Bill the U.S. Forest Service for actual costs incurred, not to exceed (k)$ ,as agreed to in the attached Financial Plan.

C. Upon presentation of a Bill for Collection, reimburse the U.S. Forest Service for actual costs incurred, not to exceed (l)$ ,as agreed to in the attached Financial Plan.

## IV. THE U.S. FOREST SERVICE SHALL:

A. Perform in accordance with the terms of this SPA and with the attached Financial and Project Plans, Exhibits (j) .

B. PAYMENT/REIMBURSEMENT. The U.S. Forest Service shall reimburse the Cooperator for the U.S. Forest Service's share of actual expenses incurred, not to exceed (k)$ , as shown in the attached Financial Plan. The U.S. Forest Service shall make payment upon receipt of the Cooperator's (m) invoice. Each invoice from the Cooperator must display the total project costs for the billing period, including the Cooperator's share (when applicable). Cooperator in-kind contributions must be displayed as a separate line item and must not be included in the total project costs available for reimbursement. The final invoice must display the Cooperator's full match towards the project, as shown in the financial plan, and be submitted no later than 120 days from the SPA expiration date.

Each invoice must include, at a minimum:

1) Cooperator's complete legal name, address, and telephone number
2) U.S. Forest Service Supplemental Project Agreement number
3) Invoice date
4) Invoice number, if applicable
5) Performance dates of the work completed (start & end)
6) Total invoice amount for the billing

period The invoice must be forwarded to:

EMAIL: SM.FS.ASC_GA@USDA.GOV

FAX: 877-687-4894

POSTAL: USDA Forest Service
Budget & Finance - Grants and Agreements
4000 Masthead St, NE
Albuquerque,NM87109

Send a copy to: (n)

C. REIMBURSABLEBILLING. The U.S. Forest Service shall bill the Cooperator (m) for funds sufficient to cover the costs for the specific payment period, not to exceed (l)$ as shown in the attached Financial Plan. All reimbursement billings must be completed within the same fiscal year as U.S. Forest Service expenditures. Overhead is assessed at the rate of (o) percent.

Billings must be sent to: (p)

The U.S. Forest Service is required to issue bills for expenditures incurred under reimbursable agreements at the end of or prior to the end of each federal fiscal year. Therefore, an out-of-cycle bill may be received by the Cooperator.

If payment is not received to the satisfaction of the U.S. Forest Service by the date specified on the bill, the U.S. Forest Service shall exercise its rights regarding the collection of debts owed to the United States.

D. (q)SPECIAL BILLING REQUIREMENTS – FINANCIAL DOCUMENTATION. Reimbursable billings shall be issued at the prescribed frequency based on expenditures recorded in the U.S. Forest Service accounting system for work performed. Bills for Collection reflect an aggregate amount for the billing period. U.S. Forest Service Transaction Register listing itemized expenses will be provided upon request at the end of a project or annually for long-term agreements. Provision of the Transaction Register or other supporting documentation accompanying individual bills will be limited to agreements over $2,500, and only when Cooperator requirements are clearly defined within this clause.

The special billing requirements are: (r)

E. (s)SPECIALBILLING REQUIREMENTS – PROGRAM DOCUMENTATION. The U.S. Forest Service Program Manager shall provide the Cooperator with a written report that meets the Cooperator's specific documentation requirements.

**V. IT IS MUTUALLY AGREEDAND UNDERSTOOD BY AND BETWEEN THE PARTIES THAT:**

A. (t)PRINCIPALCONTACTS. Individuals listed below are authorized to act in their respective areas for matters related to this SPA.

(u) **Principal Cooperator Contacts:**

| Cooperator Program Contact | Cooperator Administrative Contact |
|---|---|
| Name:<br>Address:<br>City, State, Zip:<br>Telephone:<br>FAX:<br>Email: | Name:<br>Address:<br>City, State, Zip:<br>Telephone:<br>FAX:<br>Email: |

(v) **Principal U.S. Forest Service Contacts:**

| U.S. Forest Service Program Manager Contact | U.S. Forest Service Administrative Contact |
|---|---|
| Name:<br>Address:<br>City, State, Zip:<br>Telephone:<br>FAX:<br>Email: | Name:<br>Address:<br>City, State, Zip:<br>Telephone:<br>FAX:<br>Email: |

B. LIABILITY. As set forth under the provisions of the referenced Cooperative Fire Protection Agreement.

C. (w)Mutually agree to the Burn Plan relevant to this SPA, and to any agreed upon revision thereof. Revisions to the Burn Plan that do not materially affect the purpose and/or terms of the SPA, but rather only revises the implementation of the project, do not require a modification to this SPA. The Burn Plan, and any revision thereof, is incorporated by reference into this SPA and will be maintained by and provided to the Program Contacts listed above.

D. In the event of a conflict between the provisions of this SPA and the referenced Cooperative Fire Protection Agreement, the Cooperative Fire Protection Agreement shall take precedence.

E. (x) PROGRAM MONITORING ANDPROGRAM PERFORMANCE REPORTS. The parties to this agreement shall monitor the performance of the agreement activities to ensure that performance goals are being achieved.

Performance reports must contain information on the following:

- A comparison of actual accomplishments to the goals established for the period. Wherever the output of the project can be readily expressed in numbers, a computation of the cost per unit of output, if applicable.

- Reason(s) for delay if established goals were not met.

- Additional pertinent information

The Cooperator shall submit annual performance reports to the U.S. Forest Service Program Manager. These reports are due 90 days after the reporting period. The final performance report must be submitted either with the Cooperator's final payment request, or separately, but not later than 120 days from the expiration date of the agreement.

PROGRAMMONITORING AND PERFORMANCE REPORTS. The parties to this agreement shall monitor the work activities to ensure that performance goals are being achieved.

The cooperator shall prepare a performance report for each reporting period that contains the following:

- A comparison of actual accomplishments to the goals established for the period. Wherever the output of the project can be readily expressed in numbers, the report shall also include a computation of the cost per unit or output, as applicable. *Example: Goal-50 miles of trail maintenance; Actual-25 miles of trail work completed near mile marker 0.7. 25 miles x $422/mile = $10,500*

- If established goals were not met, the report shall include (1) the reason for the delay, (2) a detailed explanation of why the goal was not achieved and identify any factors that may have contributed to the delay, and (3) a plan of action for addressing the issue and getting the project back on track. The plan should outline the specific steps that will be taken to address the issues and a timeline for implementing these steps. This information will enable the Forest Service to understand the reasons for the delay to determine if an agreement modification is warranted. *Example: Due to severe weather conditions, the crew was unable to reach certain areas impacted by landslides. The schedule has been modified to have a 5-person crew onsite starting in May, 2023 to complete the remaining 25 miles of trails when optimal weather conditions are expected.*

- The report shall also include any additional pertinent information relevant to the project.

For each ALN/CFDA, the performance report must include all relevant project work completed and/or invoiced for the reporting period then submitted to the Forest Service Program Contact. The quarterly performance report for each respective ALN/CFDA is due no later than 30 days after the reporting period ending March 31, June 30, September 30, December 31. The annual performance report for each respective ALN/CFDA is due

no later than 90 days after the reporting period ending March 31, June 30, September 30, December 31. The final performance report must be submitted either with the Cooperator's final payment request, or separately, no later than 120 days from the expiration date of the agreement, whichever is soonest.

For CFDA #_____, a[QUARTERLY]progress report is required.
For CFDA #_____, an [ANNUAL] progress report is required.

If financial and performance reports are not timely submitted according to the outlined terms and schedules, it is considered a material breach of the agreement and will result in payment delays and could potentially lead to termination of the agreement.

F. (y) PURCHASE OF ASSETS. Any assets (such as equipment, property, or improvements)purchased by the U.S. Forest Service with the Cooperator's contributions shall become the property of the U.S. Forest Service, unless otherwise documented via separate authority and instrument.

G. (z)PROPERTY IMPROVEMENTS. Improvements placed on federal land at the direction, or with the approval of, the U.S. Forest Service, becomes property of the United States. These improvements are subject to the same regulations and administration of the U.S. Forest Service as would other agency improvements. No part of this SPA entitles the Cooperator to any interest in the improvements, other than the right to use them under applicable U.S. Forest Service Regulations.

H. PARTICIPATION IN SIMILAR ACTIVITIES. This SPA in no way restricts the Parties from participating in similar activities with other public or private agencies, organizations, and individuals.

I. ENDORSEMENT. Either Party's contributions made under this SPA do not by direct reference or implication convey endorsement of each other's products or activities.

J. ALTERNATE DISPUTE RESOLUTION. In the event of any issue of controversy under this SPA, the Parties may pursue Alternate Dispute Resolution procedures to voluntarily resolve those issues. These procedures may include, but are not limited to, conciliation, facilitation, mediation, and fact finding.

K. MODIFICATION – COOPERATIVE FIRE. Modifications within the scope of this SPA must be made by mutual consent of the Parties, by the issuance of a written modification signed and dated by all properly authorized, signatory officials, prior to any changes being performed. Requests for modification should be made, in writing, at least (aa) days prior to implementation of the requested change. No Party is obligated to fund any changes not properly approved in advance.

L. TERMINATION – FIRE SUPPLEMENTAL PROJECT AGREEMENT. Either Party, in writing, may terminate this SPA in whole, or in part, at any time before the date of

expiration. Neither Party shall incur any new obligations for the terminated portion of this SPA after the effective date and shall cancel as many obligations as possible. Full credit shall be allowed for each Party's expenses and all non-cancelable obligations properly incurred up to the effective date of termination.

M. COMMENCEMENT/EXPIRATIONDATE – FIRE SUPPLEMENTAL PROJECT AGREEMENT. This SPA is executed as of the date of last signature and is effective through (bb) at which time it will expire unless extended.

If the referenced Cooperative Fire Protection Agreement is superseded by a new Cooperative Fire Protection Agreement, this SPA may remain in effect to the extent that it does not conflict with the provisions of the new Cooperative Fire Protection Agreement, but only until such time that the project can be completed or modified to be incorporated within the terms of the new Cooperative Fire Protection Agreement.

N. AUTHORIZED REPRESENTATIVES. By signature below, the Parties certify that the individuals listed in this document as representatives of each Party are authorized to act in their respective areas for matters related to this SPA.

(cc)

(dd) ,(ee) Date
(ff)

(gg)

(hh) ,(ii) Date
(jj)

The authority and format of this SPA have been reviewed and approved for signature.

(kk)

(ll)
U.S. Forest Service Grants Management Specialist Date

**INSTRUCTIONS for Exhibit C - Fire Supplemental Project Agreement**

All provisions in this instrument are mandatory, unless otherwise excepted. Depending on the type of project, there may be additional provisions necessary for compliance with U.S. Forest Service directives or regulations (for example, occupancy/improvements for shared space or joint publications).

(a) U.S. Forest Service Project Agreement No. For example: FY-FP-11RRUUSS-XXX.

(b) Cooperator Project Agreement No. Insert Cooperator project agreement number, if applicable.

(c) Insert name of Cooperator.

(d) Insert name of U.S. Forest Service Unit.

(e) Insert Cooperator name as cited above.

(f) Insert U.S. Forest Service name as cited above.

(g) Insert corresponding U.S. Forest Service Agreement # as identified on Cooperative Fire Protection Agreement.

(h) Insert project title.

(i) Enter brief project description.

(j) Insert alpha or numeric reference to the Exhibit added that provides a Financial and Project Plan. Note: The Project Plan may include tasks/projects defined in the Operating Plan (as referenced in the Background section), or it may be a Burn Plan, if applicable.

(k) Insert amount. If the U.S. Forest Service is not obligating funds for reimbursement to the Cooperator, then delete this provision.

(l) Insert amount. If the U.S. Forest Service is not collecting funds from the Cooperator, then delete this provision.

(m) Select and insert the appropriate billing cycle: monthly, quarterly, semi-annual, or annual. Note: quarterly dates (December 31, March 31, June 30, and September 30), semi-annually (March 31, and September 30) or annually (September 30 or earlier).

(n) Insert other contact name and address, if applicable, otherwise delete.

(o) Insert the U.S. Forest Service burden/overhead rate. Enter 'shall not be assessed' if burden is not applicable.

(p) Enter Cooperator's name, name of point of contact, and mailing address to which billing documents should be sent.

(q) If the U.S. Forest Service is not collecting funds, delete this provision. When U.S. Forest Service is collecting funds, the provision is optional if the Cooperator requires financial documentation. This provision

alerts ASC-RACA that the U.S. Forest Service shall provide transaction registers with any billing to the Cooperator under this Agreement.

(r) Insert special billing requirements here, such as whether the billing requirements are either with each bill, upon project completion, or annually.

(s) If the U.S. Forest Service is not collecting funds from the Cooperator, delete this provision. When U.S. Forest Service is collecting funds, the provision is optional if the Cooperator requires an accomplishment or program report with each BFC. This provision alerts ASC-RACA that the U.S. Forest Service must coordinate BFCs with the PM for submission to the Cooperator.

(t) May be changed to accommodate additional contacts.

(u) Insert ALL of the requested information below. If information is unavailable, then make a good-faith effort to obtain.

(v) Insert ALL of the requested information below. If information is unavailable, then make a good-faith effort to obtain.

(w) If a Burn Plan is not attached, remove this provision.

(x) Mandatory provision if U.S. Forest Service is reimbursing the Cooperator.

(y) If the U.S. Forest Service is not collecting funds from Cooperator, delete this provision.

(z) Mandatory provision if property improvements result from a project on federal lands.

Do not use this provision if improvements are owned by the Cooperator and covered under another instrument such as a Special Use Permit or license.

(aa) Insert a notification period that is no less than 30 days.

(bb) Insert the expiration date not greater than the expiration date of the Cooperative Fire Protection Agreement.

(cc) Insert date of signature.

(dd) Insert name of signatory official for Cooperator.

(ee) Insert Cooperator signatory official's positional title.

(ff) Insert Cooperator's organizational name.

(gg) Insert date of signature.

(hh) Insert name of U.S. Forest Service Signatory Official.

(ii) Insert U.S. Forest Service signatory official's positional

title. (jj) Insert U.S. Forest Service Region, Office, or Unit.

(kk) Insert date of signature.

(ll) Insert Grants Management Specialist's name.

## Exhibit D – Cost Share Agreement

| | | | | |
|---|---|---|---|---|
| **Incident Name** | | | | |
| **Cost Share Start/End** | | | **Incident Number(** | |
| **Cause** | | | | |
| **Incident Command Structure** | **Unified Command** | | **Jurisdictions** | |
| | | | | |
| | **I** | | | |

**This Cost Share Agreement between _____ and _____ was prepared under the authority of the Local Cooperative Fire Protection Agreement number:**

**It is hereby agreed that the cost basis on this incident will be shared as follows:**

**Rationale used in developing this cost agreement:**

**The following section is optional, but may be used if costs are calculated on a percentage basis:**

| Agency | Direct Cos | Support Cost | Air/Retardant Cost |
|---|---|---|---|
| | | | |
| | | | |

**This agreement and the apportionment contained are our best judgements of agency cost responsibilities.**

| | | | |
|---|---|---|---|
| **Signature** | | **Signature** | |
| **Print Name** | | **Print Name** | |
| **Agency** | | **Agency** | |
| **Date** | | **Date** | |
| **Phone** | | **Phone** | |

**City Council/Financing Authority Meeting** **I. 8.**

**DATE:** 09/16/2025

**TO:** Honorable Mayor and City Council Members

**SUBJECT:** Approve a Products Agreement with Nearmap US, Inc. to provide aerial imagery services for an amount not-to-exceed $72,213 for three years (Management Services/Finance Director Garcia)

---

**MOTION(S):**

If the City Council determines that staff's recommendation is appropriate, the following motion is provided:

I move that the City Council approve a Products Agreement with Nearmap US, Inc. to provide aerial-imagery services for an amount not-to-exceed $72,213 for three years.

**RECOMMENDATION:**

Staff recommends that the City Council approve the Products Agreement with Nearmap for aerial-imagery services for an amount not-to-exceed $72,213, for three years.

**DISCUSSION:**

The City of Redlands' GIS team uses Nearmap's aerial imagery daily to provide quality services to multiple departments in the City. The City has been using aerial-imagery services from Nearmap since December 2017, and wishes to continue their partnership with a three-year (36 months) agreement.

Nearmap provides sub-2.5" high-resolution aerial imagery for both vertical and oblique orientations. This means that the imagery is capable of capturing details on the ground that are greater than or equal to 2.5 inches, and even smaller. Vertical aerial imagery is flown between two to four times per year, and oblique imagery is flown once per year in our area. These aerial imagery services are currently used in Municipal Utilities and Engineering, Development Services,

Facilities and Community Services, Fire, Police, and Management Services departments. Additionally, this software is already integrated into several ArcGIS-related applications, making it extremely easy to access and use. Nearmap has also provided the City an allotment of 3D data exports derived from their yearly oblique imagery capture, and Nearmap now provides AI-derived service layers as an export which can be used to identify ground coverage for surfaces such as buildings, concrete, asphalt, and vegetation.

The proposed products agreement from Nearmap will allow for 36 months or three years, of access to Nearmap's services. The first year, should the agreement be approved today, will have a retroactive start date of August 15, 2025 and will cost $22,029, the second year will cost $24,012, and the third year will cost $26,172, for a total amount not-to-exceed $72,213.

**ALTERNATIVES:**

The City Council may choose to reject, modify, or table this item.

**STRATEGIC PLAN:**

N/A

**SUBMITTED BY:**
Danielle Garcia, Management Services/Finance Director

**RECOMMENDED BY:**
Charles M. Duggan Jr., City Manager

**REVIEWED BY:**
Yvette M. Abich Garcia, City Attorney
Janice McConnell, Assistant City Manager
Dana Abramovitz-Daniel, Procurement Manager

**PREPARED BY:**
Valerie Abrego, Management Analyst

---

**Fiscal Impact**

| | |
|---|---|
| **Fiscal Year:** | 2025-2026 |
| **Revenue Generating:** | No |
| **Appropriation Required Y/N:** | No |
| **Amount:** | $22,028.90 |
| **Budgeted Y/N:** | Yes |

**Account No.:** 604900

**Discussion:**

Funding for the first year of the agreement is included in the Department's adopted budget for FY 2025-2026. Funding for subsequent years will be included in future budget requests.

---

**Attachments**

Nearmap Sole Source Form

Nearmap Agreement

---

# Sole Source/ Single Source/ Standardization Form

**For procurement of supplies, equipment and services valued at $5,000 and over**

**NOTE: Every question must be answered with appropriate documentation attached; incomplete forms will be immediately rejected by Purchasing.**

**Date:** 05/30/25

**To:** Purchasing Division

**From:** Management Services-IT

**Estimated Total Cost: $** 72,212.94

**Proposed Vendor:** Nearmap US, Inc.

**Request Term:** 3 years

This form must accompany the purchase document whenever an exception to the competitive process is requested. Requests for goods and/or services from a specific vendor or limited to a specific brand, where substitutes to the recommended vendor or brand are unacceptable, must be accompanied by a written justification explaining the circumstances that make alternatives unacceptable.

The City Manager will determine whether the justification is appropriate. Requests for exception must be supported by factual statements that will pass an audit.

## INSTRUCTIONS

1. Please check all applicable categories (a. through i.) below and provide additional information where indicated.

☐ a. The requested product is an integral repair part or accessory compatible with existing equipment.

Existing Equipment: _____

Manufacturer/Model Number: _____

Age: _____

Current Estimated Value: _____

☒ b. The requested product has unique design/performance specifications or quality requirements that are not available in comparable products.

☐ c. I have standardized the requested product and the use of another brand/model would require considerable time and funding to evaluate.

☐ d. The requested product is one in which I (and/or my staff) have specialized training and/or extensive expertise. Retraining would incur substantial cost in time and/or funding.

☐ e. The requested product is used or demonstration equipment available at a lower-than-new cost.

☐ f. Repair/Maintenance service is available only from manufacturer or designated service representative.

☐ g. Upgrade to or enhancement of existing software is available only from manufacturer.

☒ h. Service proposed by vendor is unique; therefore, competitive bids are not available or applicable.

☐ i. Other factors (provide detailed explanation in #2 below).

2. Provide a detailed explanation and pertinent documentation *for each category* checked in item 1 above. Attach additional sheets if necessary:

b.Nearmap integrates into ArcGIS online and ArcGIS Desktop and mobile applications directly.
h. No other service provider offers similarly hosted high resolution/high frequency aerial imagery. Their oblique imagery viewer allows for measuring right on images. Nearmap offers AI derived surface data for use in advanced land classification.



Doc ID: 2b89fa9a4bd8e9bb2fe3f3afacb2da7efdefd637

3. Was an evaluation of other equipment, products, or services performed?

☐ Yes ☒ No

***If yes, please explain the type of evaluation performed and provide all supporting documentation:***

4. List below the name of each individual who was involved in the evaluation, if conducted, and in making the recommendation to procure this product or service. Attach additional information, if necessary.

5. **Explain what action(s) the department would take if the sole/single source services were no longer available**

We would revert back to using non-updating, lower resolution basemaps for our ArcGIS online web maps and instruct ArcMap users to go back to using internally hosted lower resolution aerial imagery. We have no current alternative for oblique imagery.

6. I certify that the above information is accurate to the best of my knowledge, and a signed copy of this document will be kept on file and available for audit in my department

| | |
|---|---|
| Prepared by | 06 / 02 / 2025<br>Date |
| Department Director | 06 / 03 / 2025<br>Date |

**Purchasing Approvals**

| | |
|---|---|
| Purchasing Agent Approval | 06 / 02 / 2025<br>Date |
| City Manager Approval | Date |



Doc ID: 2b89fa9a4bd8e9bb2fe3f3afacb2da7efdefd637

Dropbox Sign

# Audit trail

| | |
|---|---|
| **Title** | NearMap Sole Source |
| **File name** | Nearmap_Sole_Source_25-28.pdf |
| **Document ID** | 2b89fa9a4bd8e9bb2fe3f3afacb2da7efdefd637 |
| **Audit trail date format** | MM / DD / YYYY |
| **Status** | Signed |

## Document History

| | | |
|---|---|---|
| SENT | **06 / 03 / 2025**<br>00:31:53 UTC | Sent for signature to Danielle Garcia (dgarcia@cityofredlands.org), Valerie Abrego (vabrego@cityofredlands.org) and Dana Abramovitz (dabramovitz@cityofredlands.org) from registrationdoit@cityofredlands.org<br>IP: 47.181.153.216 |
| VIEWED | **06 / 03 / 2025**<br>00:32:10 UTC | Viewed by Valerie Abrego (vabrego@cityofredlands.org)<br>IP: 47.181.153.216 |
| SIGNED | **06 / 03 / 2025**<br>00:32:21 UTC | Signed by Valerie Abrego (vabrego@cityofredlands.org)<br>IP: 47.181.153.216 |
| VIEWED | **06 / 03 / 2025**<br>03:21:13 UTC | Viewed by Dana Abramovitz (dabramovitz@cityofredlands.org)<br>IP: 47.152.71.24 |
| SIGNED | **06 / 03 / 2025**<br>03:21:54 UTC | Signed by Dana Abramovitz (dabramovitz@cityofredlands.org)<br>IP: 47.152.71.24 |

Dropbox Sign

# Audit trail

| | |
|---|---|
| **Title** | NearMap Sole Source |
| **File name** | Nearmap_Sole_Source_25-28.pdf |
| **Document ID** | 2b89fa9a4bd8e9bb2fe3f3afacb2da7efdefd637 |
| **Audit trail date format** | MM / DD / YYYY |
| **Status** | Signed |

## Document History

| | | |
|---|---|---|
| VIEWED | **06 / 03 / 2025**<br>16:03:13 UTC | Viewed by Danielle Garcia (dgarcia@cityofredlands.org)<br>IP: 47.181.153.216 |
| SIGNED | **06 / 03 / 2025**<br>16:03:29 UTC | Signed by Danielle Garcia (dgarcia@cityofredlands.org)<br>IP: 47.181.153.216 |
| COMPLETED | **06 / 03 / 2025**<br>16:03:29 UTC | The document has been completed. |

Nearmap

# RENEWAL QUOTE

**Nearmap US, Inc.**
1850 W Ashton Blvd, Suite 500
Lehi, UT 84043, USA
**Phone**: +1 (801) 609 7250

| | | | |
|---|---|---|---|
| **Customer Name** | City of Redlands, CA | **Quote Number** | Q109271 |
| **Contract Commencement** | Contract commences upon signing of quote. | **Quote Expiry** | 09/20/2025 |
| **Subscription Term** | 36 Month | **Account Rep** | Stephanie Simister<br>stephanie.nagle@nearmap.com |
| **Subscription Start Date** | 08/15/2025 | **Payment Term** | Net 30 |
| | | **Payment Method** | Invoice |
| **Bill To** | City of Redlands, CA<br>Claudia Caceres<br>35 Cajon Street,<br>Redlands, California, 92373<br>(909) 335-4784 ext. 2<br>ccaceres@cityofredlands.org | **Ship To** | City of Redlands, CA<br>Claudia Caceres<br>35 Cajon Street,<br>Redlands, California, 92373<br>(909) 335-4784 ext. 2<br>ccaceres@cityofredlands.org |

| PRODUCT | ALLOWANCE | COVERAGE | SEATS |
|---|---|---|---|
| 3D Viewer | NA | Nationwide | NA |
| ArcGIS Integration | NA | NA | NA |
| Nearmap AI | 27753 Parcels / Year | Nationwide | NA |
| AI Pack: Roof Characteristics | NA | Nationwide | NA |
| AI Pack: Building Footprints | NA | Nationwide | NA |
| AI Pack: Building Characteristics | NA | Nationwide | NA |
| AI Pack: Surfaces | NA | Nationwide | NA |
| AI Pack: Vegetation | NA | Nationwide | NA |
| AI Offline Vector | 27753 Credits/Year | Nationwide | NA |
| Nearmap Oblique for Government | NA | Nationwide | Unlimited |
| 3D Export Pro | 5 sq.mile/Year | Nationwide | NA |
| | | **Total** | **USD $72,212.94** |

**ACCEPTANCE OF Q109271 will constitute an Agreement with Nearmap**

By selecting "**Yes**" or **signing below**, you acknowledge that (a)(i) the Additional Terms and Conditions of the previous Agreement between the Licensee and Nearmap applies to this Renewal Quote, unless otherwise specified in Schedule 1 of this Renewal Quote, and (ii) the Product-Specific Terms set out in Schedule 2 of this Agreement applies to this Renewal Quote, (b) you have the authority to agree to this Renewal Quote, (c) you agree to pay the fees set forth herein plus any applicable tax(es) as set forth in the resultant invoice(s). You acknowledge that the Coverage Area by Nearmap is outlined at https://www.nearmap.com/us/en/current-aerial-maps-coverage.

Note: The terms of your Agreement remain the same unless varied by this Renewal Quote. The total in this Renewal Quote is only an estimate of your next invoice. Final credits and amendments to the subscription is dependent upon the date this Renewal Quote is accepted.

---

Signature / Digital Acceptance: Date:

Full Name: Position:

PO Number (if required):

If printed, please sign, scan and email to: orders.us@nearmap.com

ATTEST:

_____

Jeanne Donaldson, City Clerk

*Schedule 1*

**Additional Payment Terms**

Amounts payable each year ( Excluding Tax)

Year 1: $22,028.90 Year 2: $24,011.50 Year 3: $26,172.54

**Additional Terms and Conditions**

1. Section 1.3 of the agreement does not apply to this license, and any auto-renewal of the Agreement will be by mutual agreement between the parties.

2. Section 1.6 of the agreement does not apply to this license.

3. Definitions of "Periodic Data Allowance· and "Excess Data Rate" in the agreement do not apply to this License.

4. The Licensee agrees that the right to use the Product is only to be used, solely by the Licensee and at all times excludes making the Product available in any medium or manner (including but not limited to sharing or using the License (as defined in the Products Agreement)) with:

a. any lower tier government, including but not limited to cities and township;

b. any neighboring local governments, including but not limited to county, parish, city, or town governments; and/or c. any higher tier government, including but not limited to county, parish, state or provincial agency.

5. Annual Actual Usage Nearmap measures data usage by the Licensee under this License as follows:

a. the data allowance used by the Licensee will be calculated at the end of the Term (or Renewal Term), based on the total data usage of all users

who access and use the Licensee's Nearmap account during the Term (or Renewal Term) (Annual Actual Usage); and

b. if the Licensee elects to download Products available to the Licensee on the Website or accesses the Product through other delivery methods made

available by Nearmap from time to time, this will be applied to the Annual Actual Usage. The Licensee may have the option to elect to download high resolution images. Downloading these images will lead to a higher Annual Actual Usage than downloading a lower resolution image.

6. The Annualized Estimated Usage is for the sole purpose of informing the Licensee of their estimated usage for the Term. In the event the Licensee exceeds the Annualized Estimated Usage, it will not incur additional fees or lose access to the Products.

7. Renewal If the Agreement is renewed by mutual agreement between the parties, the parties will in good faith discuss the appropriate Annualized Estimated Usage of the Renewal Term based on the Licensee's usage pattern and/or the Annual Actual Usage during the current Term.

8. The Licensee is not permitted to

a. use its access to the Website or the Products under this Agreement for the purposes of creating a database of images for resale, distribution, sub-

license or other commercial purposes (unless expressly permitted under the Agreement) and mass downloads or bulk feeds of any imagery;

b. pre-fetch, retrieve, cache, index, or store any Content, or portion of the Products with the exception being that the Licensee may store limited amounts of Content solely to improve the performance of the access to the Products due to network latency, and only if the Licensee does so temporarily, securely, and in a manner that does not permit use of the Content outside of the license, does not manipulate or aggregate any

Content or portion of the Products and does not prevent Nearmap from accurately tracking usage and does not modify attribution in any way; and c. review, analyze and process the Products through use of machine learning tools, this includes creation of any new products by the licensee.

9. For the purposes of this Nearmap for Government Product-Specific Terms,

a. Content means any content made available to the Licensee in connection with the License and the Website; and

b. Annualized Estimated Usage means the permitted use of data specified in the New Subscription Quote (or Renewal Quote and Amendment Quote) by the Licensee for the period of one (1) year from the Commencement Date.

10. This agreement is subject to annual appropriation by the City. In the event sufficient funds are not appropriated for payments due under this Agreement, the City may terminate the Agreement without penalty by providing written notice to the vendor.
11. Section 4.6 (Late Payment) of the Agreement is deleted in its entirety and replaced with “Intentionally Omitted”.
12. Section 9.8 (Indemnity) of the Agreement is amended to include the words “third party” after the words “direct or indirect”.
13. Section 13.1 (Confidentiality) of the Agreement is deleted in its entirety and replace with the following:

    “13.1 Confidentiality From time to time during the Term, either Party may disclose or make available to the other Party information about its business affairs, products, confidential intellectual property, trade secrets, third-party confidential information, and other sensitive or proprietary information (collectively, “Confidential Information”). Each Party shall hold the other’s Confidential Information in confidence and not make the other’s confidential Information available to any third party or use the other’s Confidential Information for any purpose other than the implementation of this Agreement. Each Party shall take all reasonable steps to ensure that the other’s Confidential Information to which it has access is not disclosed or distributed by its employees or agents in violation of the terms of this agreement. Notwithstanding subsection (a), a Party may disclose Confidential Information to the extent such Confidential Information is:

    (i) As contemplated to provide the Services or otherwise explicitly authorized under this Agreement; or

    (ii) Disclosed to the receiving Party’s Affiliates and its and their employees or representatives who have a need to know the Confidential Information; or

    (iii) To comply with a subpoena or the order of court or other governmental body of competent jurisdiction, or

    (iv) As otherwise necessary to comply with applicable local, state or federal law or regulation, provided that, to the extent it is legally permitted to do so, it gives the other Party advance notice of such disclosure; or

    (v) To establish a Party’s rights under this Agreement, including to make required court filings.

    Exclusions. Confidential information does not include information that, at the time of disclosure is: (i) in the public domain through no fault of the receiving Party; (ii) known to the receiving Party at the time of disclosure on a non-confidential basis; (iii) rightfully obtained by the receiving Party on a non-confidential basis from a third party; or (iv) independently developed by the receiving Party.”

14. Section 17.9 (Assignment) of the Agreement is amended to delete the words “or substantially all” after the words “a purchaser of”.

Schedule 2

Product-Specific Terms

**PRODUCT-SPECIFIC TERMS APPLICABLE TO 3D VIEWER**

1. **No Periodic Data Allowance** – Periodic Data Allowance will not apply to the use of the 3D Viewer Product.

2. **Additional Uses** – The Licensee is permitted to capture static images or video snapshots of 3D Viewer Product using any available print screen or video capture function and use the static images or video snapshots for purposes of creating Derivative Works. Derivative Works specifically in relation to the Licensee's use of the 3D Viewer Product means any new work created by or for the Licensee that incorporates or embeds static images or video snapshots of the 3D data.

**PRODUCT-SPECIFIC TERMS APPLICABLE TO ARCGIS INTEGRATION**

1. The Licensee's usage of the ArcGIS Integration will be counted towards the Licensee's total Periodic Data Allowance. Please ensure that you have sufficient Periodic Data Allowance to meet your requirements with ArcGIS Integration to avoid restrictions being placed with your subscription.

**PRODUCT-SPECIFIC TERMS APPLICABLE TO NEARMAP AI AND RELATED PRODUCTS**

The Terms and Conditions set out in section 1 "AI Attributes: General Provisions" below apply to all Nearmap related AI Products.

1. **AI Attributes: General Provisions**

   (a) AI Attributes have been computed under the parameters set out in Help Center.

   (b) The Licensee must not use AI Attributes as training datasets on its machine learning models or automated processes, or to create such models or processes, which enables the Licensee to run such models or processes independently without the use of Nearmap's AI Attributes, after termination or expiry of the Agreement.

   (c) Subject to the delete and destroy obligations under this Agreement, the Licensee may store and use AI Attributes exported from the Website, an API or as provided by Nearmap for the Permitted Purposes only.

   (d) The Licensee shall, within seven (7) days from the expiry or termination of the Agreement, provide Nearmap a certification declaring that it has deleted and destroyed all AI Attributes.

2. **Specific Licensing Terms: Nearmap AI**

   (a) AI Attributes can be viewed through the Website within the Coverage Area.

   (b) AI Attributes can be exported through the Website and/or through an API (if API Feature API is an included Product) in formats which may include geospatial file format and flat file format.

   (c) AI Attributes for a defined area of interest of parcels can be exported up to the allocated Usage Allowance. Each time the Licensee selects an area of interest for export, it will be deducted from the Usage Allowance. Unused Usage Allowance will not be rolled over to the next Period.

   (d) Where a selected area of interest exceeds the remaining Usage Allowance, the Licensee will be unable to request the export .

   (e) Once the Licensee has used its Usage Allowance it will no longer be able to request an export unless it elects to purchase Top Up Blocks or until its Usage Allowance resets.

   (f) Additional terms related to Usage Allowance are set out in the Help Center.

3. **Specific Licensing Terms: AI Packs**

   The type of AI Attributes that can be viewed and/or exported will depend on the AI Pack licensed by the Licensee. Full details of the data layers connected to a particular AI Pack can be found at the Help Center. The type of AI Pack available to the Licensee will be set out in the Quote.

4. **Specific Licensing Terms: AI Offline Parcel, AI Offline Vector and AI Offline Raster**

   The type and frequency of AI layers to be provided to the Licensee will be set out in the Order Summary up to the Usage Allowance.

5. **Definitions**

   (a) AI Attributes means the "AI layers" made available from the Website (which are not exportable) and the exportable "AI parcel" data.

   (b) API means an application programming interface.

   (c) Help Center means the user guides, operating manuals, training materials, product/service descriptions, product/service specifications, technical manuals, supporting materials, specifications, and other information relating to the Products, including all subsequent revisions and additions thereto as published on our Help Center.

   (d) Usage Allowance for:

(i) Nearmap AI means the “Parcel” allowance as specified in the Quote, plus the aggregate Parcel allowance for purchased Top Up Blocks for that Period; and

(ii) AI Offline Parcel, AI Offline Vector or AI Offline Raster means the ”Credit” allowance as specified in the Quote, plus the aggregated Credit allowance for purchased Top Up Blocks for that period.

**PRODUCT-SPECIFIC TERMS APPLICABLE TO 3D EXPORT PRO**

1. This bundled product includes 3D Export and 3D Viewer. Nearmap Product-Specific Terms shall apply to 3D Export and 3D Viewer. The 3D Export Pro (including all of the bundled Products) will automatically renew for further periods in accordance with the terms of the Agreement, unless otherwise agreed in writing between the parties.

PLEASE READ THIS PRODUCTS AGREEMENT CAREFULLY. BY ACCEPTING THIS AGREEMENT BY EXECUTING A QUOTE, YOU AGREE TO BE BOUND BY THIS PRODUCTS AGREEMENT, THE QUOTE AND ALL TERMS INCORPORATED BY REFERENCE. IF YOU DO NOT AGREE TO ALL OF THESE TERMS, DO NOT ACCESS OR USE, YOU MUST NOT ACCEPT THIS PRODUCTS AGREEMENT AND NOT USE ANY NEARMAP PRODUCTS AND SERVICES.

# PRODUCTS AGREEMENT

**Recitals**

A. Nearmap is a provider of aerial photography and associated products and services.
B. Nearmap agrees to supply the Licensee with the Products described in the Quote, subject to the terms of this agreement, the Additional Terms and Conditions, Product-Specific Terms, any Schedules and the Quote which together constitute the legal agreement between the Licensee and Nearmap (the **"Agreement").**

Definitions of capitalized words are set out in section 18 of the Agreement.

## 1. GRANT OF LICENSE TO USE PRODUCTS

1.1 **Grant** Subject to the terms of this Agreement and payment by the Licensee of the Fees, Nearmap grants to the Licensee a limited, non-exclusive, non-transferrable license for the Term to use the Products for and to the extent of the Permitted Purpose (the **"License").**

1.2 **Authorized Users** The Products available under this License are only to be used by the total number of Authorized Users. The Licensee shall implement reasonable controls to ensure that it does not exceed the number of Authorized Users. If the number of users exceeds the total number of Authorized Users, the Licensee will be in breach of this Agreement.

1.3 **Renewal** Upon the expiration of the initial Term, this Agreement subject to any amendments to this Agreement required by Nearmap, shall be renewed automatically for successive renewal terms of twelve (12) months each (each a **"Renewal Term")** unless terminated by either party by providing at least 30 days' written notice of its intention not to renew this Agreement prior to the expiry of the initial Term or any current Renewal Term.

1.4 **Replacement Product** Nearmap may from time to time supply the Licensee with a replacement Product of no lesser quality than the previously supplied Product at its absolute discretion. If requested by Nearmap, the Licensee must stop using any previously supplied Product and use the replacement Product from the date of delivery from Nearmap.

1.5 **Acknowledge Nearmap source** The Licensee must expressly acknowledge Nearmap, in a reasonably prominent manner (by displaying the Nearmap logo or other appropriate attribution), as the source of any Product or Derivative Works that the Licensee uses, copies, modifies or distributes. Unless otherwise permitted in writing, the Licensee must not remove or cause to be removed any Nearmap logo, watermark or other Nearmap attribution in any Product or Derivative Works.

1.6 **Data Use for Government Products** Nearmap measures data usage by the Licensee under this License for Government Products. When using Government Products, Nearmap's Fair Use Policy regulates the Licensee's consumption of data during the Term (or Renewal Term) the following conditions also apply to the Licensee's use of Government Products:

(a) the amount of data used by the Licensee on the Government Products will be monitored and then calculated at the end of every Term or Renewal Term based on the total data of all users who access and use the Licensee's Nearmap account during that Period; and

(b) if the Licensee elects to download and/or export Government Products available to the Licensee on the Website, this will be applied to the calculation of the Licensee's use of the Government Products.

1.7 **Allowance for Non-Government Products** Non-Government Products Licensed to the Licensee may be subject to additional Allowance, Periodic Allowance or Periodic Data Allowance terms that are published in the Product Specific Terms and if applicable the Periodic Allowance Section.

1.8 **Unavailability** Subject to section 12, If a Product is not available for a period of 3 consecutive days, the Term will be extended by the period of such unavailability.

## 2. RESTRICTIONS ON RIGHT TO USE PRODUCTS

2.1 **Permitted Purpose** The Products must only be used for the Permitted Purpose.

2.2 **No right to distribute, transfer, resell, assign or sublicense** This License is granted only to the Licensee. The Licensee must not distribute, transfer, resell, assign, rent, lease or sublicense any Product or any of the Licensee's rights under this License without Nearmap's prior written consent.

2.3 **No third party access** Unless otherwise provided in this Agreement, the Licensee must not make any Product available in any medium or manner to any third party (including but not limited to the Licensee's subsidiaries, affiliates, any lower or higher tiered governments and any neighbouring local government).

2.4 **Employees** The Licensee may make Products available to any employee of the Licensee, subject to that person complying with the terms of the Agreement as if they were a party to it and the total number of Authorized Users has not been exceeded. Such employees are deemed to be Authorized Users. The Licensee is responsible and liable for any person who uses the Licensee's account access details or uses Products made available to the Licensee in breach of this Agreement, including, without limitation, for any additional fees that become payable if the Licensee exceeds the number of Authorized Users.

2.5 **No machine learning** The Licensee must not conduct machine learning work in connection with this Agreement or any Products, which includes but Is not limited to any:

(a) machine learning models (including the model form and model parameters);
(b) outputs of machine learning models;
(c) software that processes or transforms Input data for training a machine learning model or getting a prediction from a machine learning model Into a format suitable for training or making such prediction; or
(d) software used to train a machine learning model or compute outputs of a machine learning model for a given set of input data.

2.6 **No caching and creation of database** Except as expressly permitted under this Agreement, the Licensee is not permitted to:

(a) use its access to the Products under this Agreement for the purposes of creating a database of Imageries for resale, distribution, sub-license or other commercial purposes and mass downloads or bulk feeds of any imagery; and
(b) pre-fetch, retrieve, cache, index, or store any Content or portion of the Products.

2.7 **Restriction on integration methods** The Licensee is only permitted to use API Integration method authorized by Nearmap, or other integration methods authorized by Nearmap in writing, including but not limited to integration with the Licensee's or other third party platforms or software.

2.8 **Limits on use of Website** In the Licensee's use of the Website, the Licensee must not (without the prior written consent of Nearmap):

(a) provide a link to another URL;
(b) upload content or other information to the Website (except as necessary to use the Products);
(c) do anything to damage, interfere or disrupt access to the Website or do anything which might impair its functionality;
(d) use the Website in any way to send unsolicited email (commercial or otherwise) or any other material for marketing or publicity purposes;
(e) publish, post, distribute, disseminate or otherwise transmit, defamatory, offensive, infringing, obscene, indecent or other unlawful or objectionable or confidential material or information;
(f) make available, upload or distribute by any means any material or files that contain any viruses, bugs, corrupt data, "trojan horses", "worms" or any other harmful software;
(g) remove any content or information from the Website, other than that permitted under the terms of this License;
(h) falsify the true ownership of a Product or other material or information made available via the Website;
(i) obtain or attempt to obtain unauthorized access, through whatever means, to the Website;
0) use the Website other than In accordance with this Agreement;
(k) attempt any of the above acts or engage, encourage or permit another person to do any of the above acts; or
(l) provide or allow access which exceeds the total number of Authorized Users in connection with use of the Product.

2.9 **Breach** If the Licensee breaches any of sections 2.1 to 2.8 inclusive, Nearmap reserves its rights to terminate the Agreement in accordance with section 6.2, restrict the Licensee's access to the Products, and take any other steps available to it at law.

## 3. THE LICENSEE'S ACCESS TO PRODUCTS AND SERVICES

3.1 **Authorized Users** Any password/ID Issued by Nearmap to an Authorized User Is personal and confidential to that Authorized User. If Nearmap suspects that any password/ID Is being used by an unauthorized person, by a different Authorized User to the person to whom it was issued or the number of Authorized Users has been exceeded, Nearmap may:

(a) cancel that password/ID;
(b) restrict the Licensee's access to the Product to low resolution imagery, or apply any other restrictions on access that Nearmap determines in its absolute discretion;
(c) immediately cease the Licensee's access to the Product;
(d) require the Licensee to pay for any additional fees due based on the standard Nearmap Fees for the applicable Product, In respect of any such unauthorized use; and/or
(e) exercise any other right available to Nearmap under the terms of this Agreement oral law.

3.2 **Downtime** Nearmap will use reasonable efforts to ensure that the Website remains available but cannot guarantee that this will be the case at all times. Nearmap agrees that, wherever possible, all planned maintenance will be done out of normal Operational Hours to ensure optimal uptime of the Website. When Nearmap becomes aware of any Fault, Nearmap will use reasonable efforts to:

(a) allocate such resources as may be necessary to remedy the Fault; and

(b) otherwise take all reasonable steps to remedy the Fault so as to minimize any disruption to the Licensee's use of the Products.

3.3 **Expiry** The Licensee's License will expire at the end of the Term unless renewed in accordance with section 1.3 and may be suspended or terminated In accordance with section 6.2 if the Licensee Is in breach of this Agreement.

3.4 **Unauthorized Use** Licensee shall take reasonable steps to prevent unauthorized access to the Products, including without limitation protecting its passwords and other log-in information. The Licensee shall notify Nearmap Immediately of any known or suspected unauthorized use of the Products or breach of Its security and shall use best efforts to stop said breach and minimize the adverse impact of said breach on Nearmap.

3.5 **Audit** During the Term of this Agreement and for two (2) years after termination or expiry of this Agreement, the Licensee shall maintain records regarding its use of the Products according to its record keeping policies and procedures. The Licensee shall permit Nearmap (or its auditors) access to the Licensee's records pertaining to the Licensee's use of the Products. Nearmap will give at least thirty (30) days prior written notice of an audit and will not conduct an audit more than once per calendar year unless non-compliance findings are noted, in which case the audit period may be extended.

3.6 **Audit Findings** If an audit results In findings of non-compliance, Nearmap may, at its discretion (a) invoice any additional license fees due based on the standard Nearmap Fees in place at the time of the original license grant, (b) recover the reasonable cost of the audit if additional Fees exceed five (5) per cent of the Fees paid during the audit period and (c) terminate this Agreement in accordance with section 6. Licensee must pay all invoices issued under this section within thirty (30) days following the date of invoice or such other period agreed between the parties.

## 4. FEES

4.1 **Fees** The Fees payable by the Licensee are set out In the Quote.

4.2 **Payment** The Fees are payable by the Licensee to Nearmap in the manner and by the due date as set out in the Quote at the beginning of each Term unless otherwise agreed by Nearmap. Where the Fees are payable by credit card, the Licensee authorizes Nearmap to charge the Licensee's credit card for all purchased Products listed in the Quote for the initial Term and any Renewal Term.

4.3 **No cancellation** Subject to section 4.4, all Fees are non-cancellable and non-refundable except as expressly set out in the Agreement.

4.4 **Refund of Fees** If the Licensee is not in breach of the Agreement, and Nearmap elects to terminate the Agreement under section 6.3, Nearmap will refund the Licensee any pre-paid fees relating to the portion of Term remaining as at the date of termination.

4.5 **Taxes** Unless otherwise stated, Fees and Late Payment Fee do not Include any direct or indirect local, state, provincial, federal or foreign taxes, levies, duties or similar governmental assessments of any nature, Including value-added, excise, use or withholding taxes (collectively, "Taxes"). Licensee is responsible for paying all Taxes except those assessable against Nearmap based on its income. Nearmap will invoice Licensee for such Taxes If Nearmap believes it has a legal obligation to do so and Licensee agrees to pay such Taxes if so Invoiced.

4.6 **Late Payment** If a scheduled Fee payment Is still overdue after seven (7) days' notice from Nearmap to remedy the payment default, the Licensee agrees that Nearmap may charge the Licensee a Late Payment Fee and/or immediately limit or terminate access to the Products provided under this License.

4.7 **Amendments** Fees of the relevant Product may only be Increased at the end of the Term (including any Renewal Term) subject to Nearmap and the Licensee agreeing In writing.

## 5. THE **LICENSEE'S WARRANTIES**

5.1 **Warranty** The Licensee warrants that:

(a) any information the Licensee supplies to Nearmap in respect of the Agreement is complete and correct. The Licensee must keep Nearmap informed of any change to the Licensee's information provided to Nearmap, including any change to the Licensee's contact details, or the details of a credit card used for payment;

(b) the Licensee will immediately notify Nearmap of any usage of any Product outside the Permitted Purpose, and provide any other Information reasonably requested by Nearmap;

(c) the Licensee has the power to enter into this Agreement and to perform the obligations under it; and

(d) the Licensee has and will comply with all relevant laws relating to the Licensee's use of the:

(i) License;

(ii) Products; and

(Iii) Website.

## 6. TERMINATION AND EXPIRY

6.1 **Initial Term** This Agreement commences on the Commencement Date and continues until expiry of the Term unless terminated earlier in accordance with the terms of this Agreement or renewed under section 1.3.

6.2 **Termination by Either Party** Either party may terminate this Agreement with immediate effect by giving notice to the other party if:

(a) the other party breaches any of its obligation under this Agreement capable of remedy and fails to remedy that breach within fourteen (14) days after receiving notice requiring it to do so;

(b) the other party breaches any of its obligations under this Agreement incapable of remedy and Content; or

(c) the other party files for protection under bankruptcy laws, makes an assignment for the benefit of creditors, appoints or suffers appointment of a receiver or trustee over its property, files a petition under any bankruptcy or Insolvency act or has any such petition filed against it which is not discharged within sixty (60) days of the filing thereof or admits in writing its inability to pay its debt generally as they become due.

6.3 **Termination by Nearmap** Notwithstanding anything else in the Agreement but subject to section 4.4, Nearmap has the right, in its absolute discretion and upon giving the Licensee 1O Business Days' notice, to terminate the Agreement and the License.

6.4 **Consequences** If the Agreement is terminated under sections 6.2 or 6.3 or expires at the end of the Term:

(a) the License Immediately terminates and the Products will no longer be available to the Licensee;

(b) The Licensee must immediately destroy, delete or return to Nearmap all Products; and

(c) subject to section 7.3, the Licensee and the Authorized Users are not permitted to use any Products for any purpose.

6.5 **Costs** Nearmap reserves all rights following termination of this Agreement, including any rights available to Nearmap to collect any outstanding Fees which may be owed by the Licensee. The Licensee will be liable for any reasonable legal costs incurred by Nearmap In enforcing its rights following termination of this Agreement.

6.6 **Continuing obligations** After expiry or termination of the Agreement or a License, sections 1.5, 2, 4, 6.5, 7, 8, 9, 10, 13, 14, 15, and 17 will still be binding on the Licensee in relation to Products licensed or obtained during the Term.

## 7. INTELLECTUAL PROPERTY

7.1 **Ownership** Unless otherwise indicated, the Website, the Products, the Content, and all associated Intellectual Property Rights, data, Information and software are owned by Nearmap and are protected by copyright, moral rights, trademark and other laws relating to the protection of intellectual property. Nearmap reserves all of its Intellectual Property Rights. Except for the limited License granted to the Licensee in section 1.1, no ownership or Intellectual Property Rights In the Website, any Product or Content will pass or be licensed to the Licensee.

7.2 **Trademarks** The Nearmap trademarks and all associated Intellectual Property Rights are owned by Nearmap. Nothing in the Agreement confers upon the Licensee any rights to use or modify any of Nearmap's trademarks, except that Nearmap grants the Licensee a royalty free, limited non-exclusive, non-transferrable, non-sublicensable license to reproduce and display Nearmap trademarks only to the extent necessary to comply with the Licensee's obligations under the Agreement. Any such reproduction and display of those marks must comply with the policies and rules Nearmap makes available to the Licensee from time to time.

7.3 **Derivative Works** Subject to compliance with all other terms of this Agreement, the Licensee Is granted a non-exclusive right to produce and use Derivative Works for a Permitted Purpose. Unless otherwise notified to the Licensee by Nearmap, the Licensee may continue using Derivative Works following termination or expiry of this Agreement. For the avoidance of doubt, Nearmap will continue to own all rights in and to any Products and Content embedded in a Derivative Work, but all other rights In and to the Derivative Work will belong to the Licensee.

## 8. THIRD PARTY PROVIDERS

8.1 Nearmap engages Third Party Providers In order to provide the Products. The Licensee agrees to comply with all requirements and restrictions that Third Party Providers may Impose on Licensee directly or indirectly by imposition on Nearmap, in relation to their respective products and/or services, at the time of, or subsequent to, the Agreement. The Licensee acknowledges that provision of the Products is subject to, and dependent upon, adequate delivery of products and services by the Third Party Providers. In accordance with section 9 of the Agreement, Nearmap's liability Is reduced to the extent that loss or damage of any kind is caused or contributed to, by Third Party Providers. For the Licensee's convenience, Nearmap has set out in this section 8 links to the terms and conditions of these Third Party Providers with which the Licensee is required to comply. The Licensee further acknowledges that by entering Into the Agreement, the Licensee Is deemed to accept the respective terms and conditions of Third Party Providers, which currently include the Third Party Providers set out below. Third Party Providers and their terms of supply may change from time to time during the Term of the Agreement.

(a) **Google** Nearmap engages Google to supply navigation and geo-location data, and related content. By entering into the Agreement, the Licensee agrees to the Google Terms of Service as they apply to the Licensee. https://www.google.com/enterprise/earthmaps/legal/us/maps_purchase_agreement_apac.html;

(b) **Amazon Web Services (AWS)** Nearmap engages Amazon Web Service, Inc. to provide services (the **"AWS Services")** which enables delivery of the Products. By entering into the Agreement, the Licensee agrees to comply with the AWS Customer Agreement (http://aws.amazon.com/agreemenU) as it applies to the Licensee. Use of the Products is also subject to the Licensee's compliance with the following AWS policies:

(i) Privacy Policy

(http://aws.amazon.com/privaci)

(ii) Acceptable Use Polley (http://aws.amazon.com/aug/)

(iii) Terms of Use (http://aws.amazon.com/terms/)

(iv) Service Terms (http://aws.amazon.com/serviceterms/)

(v) Trademark Guidelines (http://aws.amazon.com/trademark-guidelines/)

(c) **NASA/NCAS** By entering into the Agreement, the Licensee agrees to the following NASA/NCAS terms and conditions: (https://www.nearmap.com/us/en/legal/copyright).

9. **WARRANTY AND LIABILITY**

9.1 **Warranty** Nearmap agrees to use industry standard GPS to ensure captured imagery has accurate geographical positioning.

9.2 **DISCLAIMER OF WARRANTIES** OTHER THAN AS SET FORTH IN SECTION 9.1, THE WEBSITE AND THE PRODUCTS ARE PROVIDED ON AN "AS IS" AND "AS AVAILABLE" BASIS, WITHOUT ANY WARRANTIES OF ANY KIND TO THE FULLEST EXTENT PERMITTED BY LAW. NEARMAP AND ITS CONTENT PROVIDERS, AGENTS, MANDATARIES AND AFFILIATES EXPRESSLY DISCLAIM ANY AND ALL REPRESENTATIONS, WARRANTIES, CONDITIONS AND GUARANTEES, WHETHER EXPRESS, STATUTORY OR IMPLIED, INCLUDING, BUT NOT LIMITED TO, ANY IMPLIED REPRESENTATIONS, WARRANTIES, CONDITIONS OR GUARANTEES OF MERCHANTABILITY, TITLE, FITNESS FOR A PARTICULAR PURPOSE, NON-INFRINGEMENT, AND COURSE OF DEALING OR PERFORMANCE.

9.3 **NO REPRESENTATIONS** WHILE NEARMAP USES REASONABLE EFFORTS TO ENSURE THE ACCURACY, CORRECTNESS AND RELIABILITY OF THE CONTENT, THE PRODUCTS AND THE WEBSITE, NEARMAP MAKES NO REPRESENTATIONS, WARRANTIES, CONDITIONS OR GUARANTEES AS TO THE ACCURACY, CORRECTNESS OR RELIABILITY OF ANY PRODUCT OR CONTENT CONTAINED ON THE WEBSITE. THE PRODUCTS AND THE WEBSITE ARE SUBJECT TO ERRORS, OMISSIONS, INACCURACIES AND DISTORTIONS AND NEARMAP WILL NOT BE RESPONSIBLE FOR, OR LIABLE FOR ANY CLAIMS MADE BY OR ARISING OUT OF, ANY PERSON OR ENTITY SEEKING TO RELY ON ANY OF THE PRODUCTS OR THE WEBSITE.

9.4 **LIMIT OF LIABILITY** NEARMAP'S LIABILITY FOR: (A) A BREACH OF A WARRANTY UNDER SECTION 9.1; OR (B) A BREACH OF A REPRESENTATION, WARRANTY, CONDITION OR GUARANTEE WHICH IS IMPLIED OR IMPOSED IN RELATION TO THIS LICENSE UNDER LEGISLATION AND CANNOT BE EXCLUDED, WILL BE LIMITED TO, AT NEARMAP'S OPTION, REPLACING OR REPAIRING THE PRODUCTS OR SUPPLYING PRODUCTS EQUIVALENT TO THE RELEVANT PRODUCTS, OR PAYING THE COST OF REPLACING OR REPAIRING THE PRODUCTS.

9,5 **NO LIABILITY FOR CLAIMS** TO THE EXTENT PERMITTED BY LAW, IN NO EVENT WILL NEARMAP, ITS CONTENT PROVIDERS, AGENTS, MANDATARIES OR AFFILIATES BE LIABLE FOR ANY CLAIMS OF ANY KIND ARISING FROM OR CONNECTED WITH THE USE OF THE WEBSITE, THE CONTENT OR THE PRODUCTS, OR THE UNAVAILABILITY OF THE SAME, INCLUDING BUT NOT LIMITED TO LOSS OF USE, LOSS OF PROFITS OR LOSS OF DATA, AND DIRECT, INDIRECT, INCIDENTAL, PUNITIVE AND CONSEQUENTIAL DAMAGES, WHETHER IN CONTRACT, TORT (INCLUDING BUT NOT LIMITED TO NEGLIGENCE), EXTRACONTRACTUAL LIABILITY, OR OTHERWISE. THE LICENSEE IS RESPONSIBLE FOR THE ENTIRE COST OF ALL SERVICING, REPAIR OR CORRECTION REQUIRED DUE TO THE LICENSEE'S USE OF THIS WEBSITE, THE CONTENT OR THE PRODUCTS. THIS EXCLUSION APPLIES, WITHOUT LIMITATION, TO ANY CLAIMS CAUSED BY OR RESULTING FROM RELIANCE BY A USER ON ANY INFORMATION OBTAINED FROM NEARMAP.

9.6 **AGGREGATE LIMIT** IN NO EVENT WILL THE AGGREGATE LIABILITY OF NEARMAP, WHETHER IN CONTRACT, WARRANTY, TORT (INCLUDING NEGLIGENCE, WHETHER ACTIVE, PASSIVE OR IMPUTED), EXTRACONTRACTUAL LIABILITY, PRODUCT LIABILITY, STRICT LIABILITY OR OTHER THEORY, ARISING OUT OF OR RELATING TO THE USE OF THE PRODUCTS, THE CONTENT OR THE WEBSITE EXCEED ANY COMPENSATION OR FEE THE LICENSEE HAS PAID, IF ANY, TO NEARMAP FOR ACCESS TO OR USE OF THE PRODUCTS OVER THE 12 MONTH PERIOD PRIOR TO THE ALLEGED DEFAULT, BREACH OR EVENT GIVING RISE TO THE LIABILITY.

9.7 **Third Party Providers** The Licensee acknowledges that Nearmap relies on the services of Third Party Providers in order to supply the Products and related services. Without limiting any of the above, to the fullest extent permitted by applicable law, Nearmap will not be liable for any loss, damage, or cost of any kind, which is caused, or contributed to, by a third party service provider.

9.8 **Indemnity** To the extent permitted by law, the Licensee agrees to Indemnify Nearmap and its directors, officers, employees, agents, mandataries and subcontractors, from and against any and all direct or indirect third party claims, damages, losses, liabilities, expenses and costs (including reasonable attorney's fees and costs) arising from or out of:

(a) the Licensee's actual or alleged breach of any provisions of this Agreement;
(b) the Licensee's use of the Product for any purpose; and
(c) the Licensee's use of, or any third party's use of, or inability to use, any Derivative Works, including without limitation, any output from the Derivative Works.

9.9 **Notice of claim** Nearmap will provide the Licensee with notice of any claim or allegation under section 9.8, and Nearmap has the right to participate in the defense of any such claim at Its expense.

10. **COPYRIGHT COMPLAINTS**

10.1 Subject to section 9, if any third party brings a Claim against the Licensee alleging that the Licensee's use of the Products in accordance with this License Infringes their copyright **("Infringement Claim"),** Nearmap will defend the Licensee against the Claim and pay any settlement to which Nearmap consents or final court-awarded damages for which the Licensee is liable.

10.2 The Licensee must:
(a) promptly notify Nearmap of any such Infringement Claim;
(b) not make any admissions In relation to the Infringement Claim without Nearmap's prior written consent;
(c) permit Nearmap to conduct the defense of the Infringement Claim Including all negotiations for settlement; and
(d) provide Nearmap with any assistance reasonably requested to allow Nearmap to defend the Infringement Claim.

10.3 Nearmap will have no liability for any Infringement Claim:
(a) that arises from any:
  (i) use of the Product In violation of this Agreement;
  (ii) modification of the Product by anyone other than Nearmap or a party authorized by Nearmap in writing to modify the portion of the Product applicable to the Infringement Claim; or
  (iii) third-party products, services, hardware, software or other materials, or a combination of these with the Products, which would not be infringing without this combination; or
(b) if the Licensee fails to comply with section 10.2.

10.4 To the maximum extent permitted by law, this section 10 sets out Nearmap's sole and exclusive liability, and the Licensee's sole and exclusive remedy, for any third party Infringement Claims brought against the Licensee In relation to an infringement of Intellectual Property Rights.

11. **PRIVACY POLICY**

11.1 Nearmap will collect, use and disclose any personal Information supplied by the Licensee as set out In Nearmap's Privacy Policy, as amended from time to time, and currently available at https://www.nearmap.com/us/en/legal/privacy-policy. The Licensee hereby consents to those collections, uses and disclosures..

11.2 To the maximum extent permitted by law, by entering into this Agreement, the Licensee expressly consents to receiving general emails relating to product updates, new products or anything related to the usage of the product from Nearmap but prior written consent Is required to receive by email direct marketing communications from Nearmap.

11.3 By entering into this Agreement, the Licensee acknowledges that personal Information provided by the Licensee in the course of accessing Products (Including, without limitation, credit or debit card details provided by the Licensee for the purpose of paying Nearmap) may be disclosed to and held by one or more of Nearmap's third party suppliers and partners (including, without limitation, providers of payment processing services), and used by those third parties in connection with the supply of Products. Nearmap will have no liability whatsoever with respect to any personal Information held by a third party In connection with the supply of Products.

12. **FORCE MAJEURE**

12.1 **Force Majeure Event** If a party is unable to perform or is delayed in performing an obligation under this Agreement (except for any obligation to pay money, including Fees) because of an act of war, terrorism, hurricane, earthquake, other act of God or of nature, strike or other labor dispute, riot or other act of civil disorder, embargo, or other cause beyond the performing party's reasonable control **("Force Majeure Event"):**
(a) that obligation Is suspended but only so far and for so long as that party Is affected by the Force Majeure Event; and
(b) the affected party will not be responsible for any loss or expense suffered or Incurred by the other party as a result of, and to the extent that, the affected party is unable to perform or is delayed in performing its obligations under this Agreement because of the Force Majeure Event.

12.2 **Notice of Force Majeure Event** If a Force Majeure Event occurs, the party affected by the Force Majeure Event must:
(a) Promptly (when reasonably possible to do so) give the other party notice of the Force Majeure Event and an estimate of the non-performance and delay;
(b) take all reasonable steps to overcome the effects of the Force Majeure Event; and
(c) resume compliance as soon as practicable after the Force Majeure Event no longer affects it.

13. **CONFIDENTIALITY**

13.1 The Licensee must not use any Confidential Information for any purpose not expressly permitted hereunder. The Licensee will disclose Confidential Information only to its employees who have a need to know for purposes of this Agreement and who are under a duty of confidentiality no less restrictive than the Licensee's duty hereunder. The Licensee will protect Confidential Information from unauthorized use, access, or disclosure in the same manner as it would protect its own confidential or proprietary information of similar nature and with no less than reasonable care.

14. **NOTICES**

14.1 All notices and consents will be in writing and will be considered delivered and effective upon receipt (or when delivery is refused) when (a) personally delivered; (b) sent by registered or certified mail (postage prepaid, return receipt requested); (c) sent by nationally recognized private courier (with signature

required and all fees prepaid}; or (d} sent by email with confirmation of transmission. Notices must be sent to the Licensee at the address set forth In the Quote (or if none Is specified, the address to which Nearmap sends invoices) and for Nearmap to 10897 South River Front Parkway, Suite 150 South Jordan, UT 84095, USA, or at another address as a party may designate in writing.

## 15. TECHNOLOGY EXPORT

15.1 The Licensee shall not: (a) permit any third party to access or use the Product In violation of any U.S. or Canadian law or regulation; or (b) export any software provided by Nearmap or otherwise remove it from the United States or Canada except in compliance with all applicable U.S. and Canadian laws and regulations. Without limiting the generality of the foregoing, the Licensee shall not permit any third party to access or use the Product in, or export such software to, a country subject to a United States embargo (as of the Effective Date, Cuba, Iran, North Korea, Sudan, and Syria) or a Canadian embargo.

## 16. NEARMAP NOW

16.1 **Survey** During the Term, the Licensee may request a survey of an area which Is not covered (In Its entirety or in part) by the Coverage Area **("Survey").** The Licensee must provide a detailed description of the area that Is to be covered by the Survey and which is to be included in the Survey Specification. Upon receipt of such a request in writing, Nearmap may, in its absolute discretion, agree to provide the Survey to the Licensee for a Survey Fee.

16.2 **Delivery of Survey** Subject to sections 12 and 16.1, Nearmap will deliver the Survey to the Licensee by uploading the Survey to the Website within 6 months of the date on which Nearmap receives payment of the Survey Fee In full from the Licensee. Nearmap will notify the Licensee in writing once the Survey has been uploaded to the Website.

16.3 **Availability to other Nearmap customers** Nearmap may, at its absolute discretion, allow other customers of Nearmap to access the Survey on the Website.

16.4 **Refund of Survey Fee** If the Licensee is not in breach of the Agreement and Nearmap elects to terminate the Agreement under section 6.3 prior to delivery of the Survey, Nearmap will refund the Survey Fee to the Licensee.

16.5 **Other Products** This Section 16 will not be applicable to the Licensee if the License has not purchased a Survey.

## 17. MISCELLANEOUS TERMS

17.1 **Nearmap customer** Licensee grants Nearmap the right to use Licensee's name and logo to Identify as a Nearmap customer for marketing or promotional purposes in public or private communications with our existing or potential customers, subject to Licensee's standard trademark usage guidelines as provided to us from time-to-time.

17.2 **Additional Terms and Conditions** The Additional Terms and Conditions form part of, and should be read In conjunction with, this Agreement.

17.3 **Precedence of Documents** This Agreement Is comprised of:

(a) the Additional Terms and Conditions;
(b) the Quote;
(c) any Product-Specific Terms; and
(d) this products agreement.

**If** there Is any ambiguity or inconsistency between the documents comprising the Agreement, the document appearing higher in the list will have precedence.

17.4 **Independent Contractors** The parties are independent contractors and will so represent themselves in all regards. Neither party Is the agent of the other, and neither may make commitments on the other's behalf. The parties agree that neither party's employee or contractor is an employee of the other party.

17.5 **Construction** The parties agree that the terms of this Agreement result from negotiations between them. This Agreement will not be construed in favor of or against either party by reason for authorship.

17.6 **Waiver** Neither party will be deemed to have waived any of its rights under this Agreement by lapse of time or by any statement or representation other than by an authorized representative in an explicit written waiver. No waiver of a breach of this Agreement will constitute a waiver of any other breach of this Agreement.

17.7 **Severability** If one or more of the terms of the Agreement are found to be Invalid, illegal or unenforceable in any respect, the validity, legality and enforceability of the remaining terms will not be affected.

17.8 **Amendments** Other than as expressly specified In this Agreement, this Agreement may only be varied with the written consent of Nearmap and the Licensee.

17.9 **Assignment** This Agreement shall not be assigned by either party without the prior written consent of the other party which shall not be unreasonably withheld; provided, however, that Nearmap may, upon written notice to the Licensee, assign all of its rights under this Agreement to (i) a parent, subsidiary or Affiliate of Nearmap, (II) a purchaser of all assets related to this Agreement, or (iii) a third party participating in a merger, acquisition, sale of assets or other corporate reorganization in which Nearmap is participating. Any attempt to assign this Agreement in violation of this provision shall be void and of no effect. This Agreement shall bind and inure to the benefit of the parties and their respective successors and permitted assigns.

17.10 **Entire Agreement** This Agreement:

(a) comprises the entire agreement and understanding between the parties on everything connected with the subject matter of this Agreement; and
(b) supersedes any prior agreement or understanding on anything connected with that subject matter.

17.11 **Counterparts** This Agreement may consist of a number of counterparts and if so the counterparts taken together constitute one and the same instrument. This Agreement is not binding on any party unless one or more counterparts have been duly executed by, or on behalf of, Nearmap and the Licensee.

17.12 **Language** The parties have expressly agreed that this Agreement and all ancillary agreements, documents or notices relating thereto be drafted solely in the English language. Les parties aux presentes ont expressement convenu que ce accord et toute autre convention, document ou avls y afferent solent rediges en anglais seulement.

17.13 **Governing Law** This Agreement will be governed by and construed In accordance with the laws of the State where the Licensee Is carrying on business applicable to agreements made and to be entirely performed within that state, without resort to its conflict of law provisions.

## 18. DEFINITIONS

In this Agreement:

**Additional Terms and Conditions** means the additional terms and conditions (if any) set out in the Quote.

**Affiliate** means, with respect to Nearmap, any entity that controls or is controlled by Nearmap, or is under common control with Nearmap. For purposes of this definition, an entity shall be deemed to control another entity if it owns or controls, directly or indirectly, at least fifty per cent (50%) of the voting equity of another entity (or other comparable Interest for an entity other than a corporation).

**Allowance** means any usage allowance the Licensee Is permitted to use and/or drawn down against for any Licensed Non-Government Products as specified the Quote.

**API** means application programming interface.

**Authorized User** means the number of persons specified in the "Seats" section of the Quote, who have been granted access to the Product by the Licensee pursuant to the term and conditions of this Agreement and who either has been assigned a unique Nearmap user login credential or whom the Licensee has assigned a user login credential that enables access to the Product.

**Business Days** means any day other than a Saturday, a Sunday or a recognised public holiday In Utah, USA.

**Claim** means any claim, cost (including legal costs on a solicitor and client basis), damages, debt, expense, tax, liability, loss, obligation, allegation, suit, action, demand, cause of action, proceeding or judgment of any kind however calculated or caused, and whether direct or indirect, consequential, incidental or economic.

**Commencement Date** means (a) for New Subscription Quotes, the date as specified in the "Contract Commencement" section or the "Subscription Start Date" section of the Quote, whichever is later, or (b} for Renewal Quotes or Amendment Quotes, the date as specified in the "Subscription Start Date" section of the Quote.

**Commercial Purpose** means to distribute, transfer, sell, sub-license or pass possession of any Products (in whole or In part) for the purpose of direct commercial benefit or gain by the Licensee.

**Confidential Information** means the terms of this Agreement, the pricing, and any other information relating to the business, finances, strategy, methods, processes, products, metadata, services or other affairs of Nearmap or Its representatives or related bodies corporate which is disclosed to, learnt by or accessed by the Licensee in connection with the Agreement, whether before or after the Licensee entered into the Agreement, whether orally, electronically, In writing or otherwise, but excludes information which:

(a) Is or becomes part of the public domain otherwise than as a consequence of a breach of the Agreement;
(b) the Licensee has obtained from a source other than Nearmap which source is entitled to disclose it; or
(c) the Licensee has developed or acquired independently before the date of the Agreement, and can provide reasonable proof.

**Content** means any content made available by or on behalf of Nearmap to the Licensee In connection with the License, whether or not through the Website or an API.

**Coverage Area** means the area specified in the "Coverage" section of the Quote for which Nearmap has available Products, which may cover part or all of that area and which may cover part (but not all} of the area covered by the Survey.

**Derivative Work** means any new work created by or for the Licensee that incorporates, embeds or includes all or part of a Nearmap Product or Content.

**Fair Use Policy** means the policy as attached to the Quote.

**Fault** means any fault, failure, error or defect which prevents the Licensee from accessing the Products, other than where access is prevented due to a planned outage, because of an unforeseeable event beyond Nearmap's reasonable control or any conduct or activity undertaken by the Licensee, the Licensee's employees or agents or mandataries.

**Fees** means the fees specified in the Quote payable by the Licensee for the License, or as otherwise agreed in writing between Nearmap and the Licensee.

**Government Products** means any Products specified in the Quote that are described as "Nearmap Vertical for Government" and "Nearmap Oblique for Government" and includes any other Products offered by Nearmap for government customers only where use of its License is connected to the Fair Use policy.

**Intellectual Property Rights** includes all Industrial and intellectual property rights throughout the world Including copyright, moral rights, trademarks, patents, rights to protect confidential Information and any other similar rights.

**Late Payment Fee** means a fee, as notified by Nearmap to the Licensee, corresponding to the costs Incurred by Nearmap (including, without limitation, administrative and other costs) in recovering any payment not made by the Licensee on the due or scheduled date for payment. Late fees incur interest at the rate of 1.5% per month (being 18% per year).

**License** means the license granted in section 1.1.

**Licensee** means the person or entity specified in the "Customer Name" section of the Quote.

**Nearmap** means Nearmap US, Inc.

**Non-Government Products** means all Products specified in the Quote that do not fall under the definition of Government Products.

**Operational Hours** means 9am to 5pm PT.

**Periodic Allowance or Periodic Data Allowance** means the data allowance specified in the "Allowance" section of the Quote unless otherwise agreed in writing between Nearmap and the Licensee.

**Periodic Allowance Section** means section 1.6 (or Its equivalent) In the most current version of the products agreement currently located at here.

**Permitted Purpose** means the use of Products by the Licensee for internal purposes In the Licensee's ordinary business, and at all times excludes any:

(a) Commercial Purpose;

(b) Unlawful Purpose;

(c) Integration or attempt to Integrate the Product In an internal system of the Licensee or of a third party; and

(d) Redistribution or copying of files, Images, photographs or making such files, Images or photographs available in any medium or manner that Is contained In the Products to any third party (except as expressly permitted under this Agreement).

**Products** means any Nearmap products specified In the Quote (and further described on the Website) and, if applicable, the Survey. For the avoidance of doubt, Products Include Content.

**Products Specific Terms** means additional terms and conditions that apply to certain Products, attached as Schedule 2.

**Quote** the document produced after the Licensee places an Initial order for the Product(s), requests any changes to its' License, or renews its License, which may be titled "New Subscription Quote", "Renewal Quote" or "Amendment Quote".

**Schedule** means a schedule to this Agreement, where such schedule has been Incorporated by reference to form part of this Agreement.

**Subscription Period** means the period stated in the "Subscription Period" column of the Quote.

**Subscription Start Date** means the date specified In the "Subscription Start Date" section of the Quote.

**Survey** has the meaning (if any) given to that section 16.1.

**Survey Fee** means the fee for the Survey as agreed in writing between Nearmap and the Licensee.

**Survey Specification** means the survey specification referred to in the Quote.

**Term** means the term specified In the "Subscription Term" section of the Quote, commencing on the Commencement Date. Where a Subscription Period is stated on the Quote, "Term" means the Subscription Period.

**Third Party Providers** means third party providers of products and services to Nearmap.

**Unlawful Purpose** means any unlawful purpose, Including but not limited to stalking, harassing or Intimidating any person or engaging in misleading or deceptive conduct.

**Website** means all pages and sub-sites available within the nearmap.com domain.

# FAIR USE POLICY

**General**

1. It is important to Nearmap that all customers are able to access the Products and Services. Accordingly, we have devised a Fair Use Policy that applies to the data usage of the Products and Services.

2. In this Fair Use Policy:
   a. **Excessive Use** has the meaning given to that term In section 7 of this Fair Use Policy;
   b. **Fair Use Policy** means this policy;
   c. **Nearmap, we, us** or **our** means Nearmap US, Inc.;
   d. **Products** has the meaning given to that term in Your Nearmap Agreement;
   e. **Services** has the meaning given to that term in Your Nearmap Agreement;
   f. **You** or **Your** means any customer of Nearmap;
   g. **Your Nearmap Agreement** means the agreement pursuant to which Nearmap provides You with various products and services; and
   h. **Unreasonable Use** has the meaning given to that term in section 5 of this Fair Use Policy.

3. We reserve the right to vary the terms of this Fair Use Polley from time to time.

4. This Fair Use Policy is in addition to Your Nearmap Agreement and in the event of any inconsistency between the terms of this Fair Use Policy and the terms and conditions of Your Nearmap Agreement, Your Nearmap Agreement prevails.

**Unreasonable Use**

5. We consider Your use of the Products and Services unreasonable where You use it in a manner which is reasonably considered by Nearmap to be fraudulent use, to be contrary to Your Nearmap Agreement or to adversely affect other Nearmap customers' use of or access to the Products and Services.

6. Among other things, "fraudulent use" includes resupply of the Products and Services without Nearmap's consent so that someone else may access or use the Products and Services or take advantage of the Products and Services.

**Excessive Use**

7. Excessive Use is a continuing and unreasonably disproportionate use of the Products and Services when compared to other average Individual named users.

**Nearmap's Rights**

8. Where Your use of the Products and Services constitutes Unreasonable Use and/or Excessive Use, Nearmap may contact You to discuss changing Your usage pattern so that It conforms with this Fair Use Policy, or to upgrade to a more suitable Product or Service (if applicable).

9. If, after Nearmap has contacted You, Your Unreasonable Use and/or Excessive Use continues, Nearmap may, without further notice to You:
   a. restrict Your access to low resolution Imagery for the remainder of the month; and/or
   b. restrict Your access to low resolution imagery for the remainder of the month until Your data allowance is reset at the beginning of the next month (if applicable); and/or
   c. restrict Your access for the remainder of the month; and/or
   d. restrict Your access to Nearmap until Your data allowance is reset at the beginning of the next month (if applicable); and/or
   e. Immediately cease Your access to Nearmap; and/or
   f. exercise any other right available to Nearmap under the terms of Your Nearmap Agreement.

**City Council/Financing Authority Meeting** **I. 9.**

**DATE:** 09/16/2025

**TO:** Honorable Mayor and City Council Members

**SUBJECT:** Authorize the annual payment to San Bernardino County Sheriff's Department (Cal-ID/Identix) in the amount of $85,781.28 for Redlands Police Department's Fingerprint Identification Services (Management Services/Finance Director Garcia)

---

**MOTION(S):**

If the City Council determines that staff's recommendation is appropriate, the following motion is provided:

I move that the City Council authorize the annual payment to San Bernardino County Sheriff's Department (Cal-ID/Identix) in the amount of $85,781.28 for Redlands Police Department's Fingerprint Identification Services.

**RECOMMENDATION:**

Staff recommend that the City Council authorize the annual payment to San Bernardino County Sheriff's Department (Cal-ID/Identix) in the amount of $85,781.28 for Redlands Police Department's Fingerprint Identification Services.

**DISCUSSION:**

Cal-ID/Identix is a sole source vendor that provides fingerprint identification services for law enforcement agencies in San Bernardino County. Cal-ID/Identix is responsible for monitoring and processing all fingerprints submitted by law enforcement agencies in San Bernardino County. The San Bernardino County Sheriff's Department is the authorized administrator of these services. Once the local fingerprinting process is complete, the records are electronically sent to the California Department of Justice (DOJ). The DOJ then enters them into a national database. In addition to fingerprint identification, the Cal-ID system also supports other biometric scanning capabilities, providing local law enforcement with broader tools for investigative purposes. This is the only system in place for

monitoring, processing, and maintaining these biometric records.

The invoice amount is based on a flat rate of $1.18 per capita at a population estimate of 72,696, for a total of $85,781.28. There is no increase in the per capita rate from the previous fiscal year and a slight increase in the estimated population compared to the previous year.

**ALTERNATIVES:**

Not applicable.

**STRATEGIC PLAN:**

Not applicable.

**SUBMITTED BY:**
Danielle Garcia, Management Services/Finance Director

**RECOMMENDED BY:**
Charles M. Duggan Jr., City Manager

**REVIEWED BY:**
Dana Abramovitz-Daniel, Procurement Manager

---

**Fiscal Impact**

| | |
|---|---|
| **Fiscal Year:** | 2026 |
| **Revenue Generating:** | N |
| **Appropriation Required Y/N:** | N |
| **Amount:** | 85,781.28 |
| **Budgeted Y/N:** | Y |
| **Account No.:** | 604900 |

**Discussion:**

Funding for this expense is included in the Fiscal Year 2025-2026 IT budget. Any subsequent increase in fees will be planned for during future budget preparations in the IT fund.

---

**Attachments**

CAL-ID Assessment Fee

---

SHANNON D. DICUS
SHERIFF-CORONER

**Invoice**

**INVOICE NO:**
**36681**

| Agency |
|---|
| City of Redlands |
| Attn: Tina Kundig |
| PO Box 3005 |
| City: Redlands State: CA ZIP: 92373-1505 |

**Date** 8/14/2025

| | | PO No. | Period of Service |
|---|---|---|---|
| | | | FY 25/26 |
| **Description** | **Population** | **Rate Per Capita** | **Amount** |
| CAL-ID Assessment Fee | 72,696 | 1.18 | $ 85,781.28 |
| See Attached Detail | | SubTotal | $ 85,781.28 |
| | | Pmt/Credit | |
| | | TOTAL | $ 85,781.28 |

"PLEASE INCLUDE INVOICE NUMBER WITH PAYMENT AND REMIT TO:

San Bernardino County Sheriff's Department
Bureau of Administration
Attn: Accounts Receivable
PO Box 569
San Bernardino, CA 92402-0569

If you have any questions regarding this invoice, please contact Raquel Duran at (909) 387-0373 or by email at Raduran@sbcsd.org.

AA

March 20, 2025

Chief Rachel Tolber
Redlands Police Department
P.O. Box 1025
Redlands, CA 92373

Dear Chief Tolber,

The CAL-ID Telecommunications Network was established in 1985 as a statewide system to transmit and access fingerprint data between local agencies and the California Department of Justice. San Bernardino CAL-ID was established soon after to utilize the state network and provide fingerprint services to San Bernardino County and its municipalities. Budgeting and oversight of San Bernardino CAL-ID is through the San Bernardino County Remote Access Network (RAN) Board. Composition of the RAN Board is determined by Penal Code section 11112.4.

Member-agencies of CAL-ID (also known as the San Bernardino Biometric Identification Network) not only receive fingerprint enrollment and searching services, but they also receive additional identification services such as live scan, mobile ID, facial recognition, iris enrollment and DNA.

Each year, member-agencies of San Bernardino CAL-ID / Biometric Identification Network are invoiced for their portion of the City Assessment Fees that help fund CAL-ID. City Assessment Fees are calculated on a per capita basis and based upon population estimates published annually by the California Department of Finance. Enclosed is a table of the most current estimates, along with the corresponding fees for each CAL-ID member-agency. Your municipality will be billed after July 1, 2025, by the San Bernardino County Sheriff's Department's Bureau of Administration, who manages fiscal operations for San Bernardino CAL-ID.

If you should have any questions regarding the assessment fee for your municipality, or about any of the services CAL-ID provides, please do not hesitate to contact me directly at (909) 890-5042, or by email at tniles@sbcsd.org.

Sincerely,

Tyson Niles, Lieutenant
San Bernardino County Sheriff's Department
Project Manager for San Bernardino CAL-ID

## SAN BERNARDINO COUNTY CAL-ID
## ASSESSMENT FEE TABLE

### FY 2025-2026

| City Name | Total Population [1] | | Percent Change | FY 24/25 Assessment Fee (@ $1.18 per capita[2]) | FY 25/26 Assessment Fee (@ $1.18 per capita[3]) |
|---|---|---|---|---|---|
| | 1/1/2023[2] | 1/1/2024[1] | | | |
| Adelanto | 36,422 | 36,131 | -0.00799 | $42,977.96 | $42,634.58 |
| Apple Valley | 74,500 | 74,322 | -0.00239 | $87,910.00 | $87,699.96 |
| Barstow | 24,759 | 24,669 | -0.00364 | $29,215.62 | $29,109.42 |
| Big Bear Lake | 4,948 | 4,958 | 0.00202 | $5,838.64 | $5,850.44 |
| Chino | 92,546 | 92,585 | 0.00042 | $109,204.28 | $109,250.30 |
| Chino Hills | 76,547 | 76,414 | -0.00174 | $90,325.46 | $90,168.52 |
| Colton | 52,841 | 52,778 | -0.00119 | $62,352.38 | $62,278.04 |
| Fontana | 212,772 | 214,223 | 0.00682 | $251,070.96 | $252,783.14 |
| Grand Terrace | 12,793 | 12,771 | -0.00172 | $15,095.74 | $15,069.78 |
| Hesperia | 99,338 | 100,087 | 0.00754 | $117,218.84 | $118,102.66 |
| Highland | 55,612 | 55,676 | 0.00115 | $65,622.16 | $65,697.68 |
| Loma Linda | 24,960 | 24,965 | 0.0002 | $29,452.80 | $29,458.70 |
| Montclair | 37,246 | 37,211 | -0.00094 | $43,950.28 | $43,908.98 |
| Needles | 4,780 | 4,769 | -0.0023 | $5,640.40 | $5,627.42 |
| Ontario | 179,555 | 181,224 | 0.0093 | $211,874.90 | $213,844.32 |
| Rancho Cucamonga | 172,344 | 173,316 | 0.00564 | $203,365.92 | $204,512.88 |
| Redlands | 71,776 | 72,696 | 0.01282 | $84,695.68 | $85,781.28 |
| Rialto | 102,367 | 103,097 | 0.00713 | $120,793.06 | $121,654.46 |
| San Bernardino | 225,620 | 226,541 | 0.00408 | $266,231.60 | $267,318.38 |
| Twentynine Palms | 25,787 | 25,346 | -0.0171 | $30,428.66 | $29,908.28 |
| Upland | 77,849 | 78,285 | 0.0056 | $91,861.82 | $92,376.30 |
| Victorville | 136,346 | 138,202 | 0.01361 | $160,888.28 | $163,078.36 |
| Yucaipa | 53,635 | 53,810 | 0.00326 | $63,289.30 | $63,495.80 |
| Yucca Valley | 21,509 | 21,594 | 0.00395 | $25,380.62 | $25,480.92 |
| Balance of County | 295,842 | 295,763 | -0.00027 | $349,093.56 | $349,000.34 |
| TOTALS: | 2,172,694 | 2,181,433 | 0.00402 | $2,563,778.92 | $2,574,090.94 |

[1] - Population statistics received from the California Department of Finance, E1 Population Estimates for Cities, Counties, and the State - January 1, 2023 and 2024, dated May 1, 2024

[2] - Based on Population statistics from previous year's E-1 Estimates

[3] - Based on current population indicated

**City Council/Financing Authority Meeting** **I. 10.**

**DATE:** 09/16/2025

**TO:** Honorable Mayor and City Council Members

**SUBJECT:** Approve a Second Amendment to the Agreement with Liftoff LLC for Microsoft Office 365 software licensing and consulting services (Management Services/Finance Director Garcia)

---

**MOTION(S):**

If the City Council determines that the staff's recommendation is appropriate, the following motion is provided:

I move that the City Council approve the Second Amendment to the agreement with Liftoff LLC for Microsoft Office 365 software licensing and consulting services.

**RECOMMENDATION:**

Staff recommends that the City Council approve the Second Amendment to the agreement with Liftoff LLC for the provision of Microsoft Office 365 software licensing and consulting services.

**DISCUSSION:**

In February 2022, the City Council approved an agreement with Liftoff LLC ("Liftoff") for software licensing and professional consulting services to facilitate the City's conversion from a Microsoft Exchange on-premise server-based e-mail platform to Office 365, an online, hosted e-mail platform. Office 365 comes with a long list of advantages over traditional on-premise e-mail systems. The initial agreement with Liftoff covered the project's two phases, and then several years of software licensing renewals.

Initially, the agreement was for one year with the option to extend that Initial Term for four (4) additional one-year terms. The compensation for the first year was $160,000, then $130,000 for each additional one-year term, bringing total

compensation for the agreement to $680,000. Staff shortages and project delays resulted in the City Council first amending the agreement in 2023 to move the majority of funding from the first year to the second year of the agreement. The last year of the agreement (Year 5) starts on February 1, 2026 and will run until January 31, 2027, and the budget for the Year 5 license renewals is currently $130,000.

The software licenses that were purchased in the original agreement accounted for each e-mail assigned to an employee or departmental group with a cityofredlands.org or redlandspolice.org domain and the accompanying cybersecurity protection for these accounts. The types of licenses purchased varied due to the access needed for different types of employees, with a higher cost assigned to licenses that need access to an Office Suite program (i.e., Microsoft Word, Excel, PowerPoint, etc.). The IT department has continually adjusted the numbers and types of licenses needed for employees as positions have turned over, and has eliminated redundant or discontinued group e-mails. As a result, the total number of licenses purchased by the City has decreased overall, despite an increase in staffing levels since the agreement was executed in 2022.

However, as a condition of the original agreement, Microsoft reserved the right to increase the cost of these licenses, which they have incrementally done over the last three years. The cost of the most common type of license that gives employees access to an Office Suite program increased from $20.00 per license per month in 2022 to $25.30 per license per month in 2025-2026. While the cost of other licenses has gone down, and specialty licenses were added sparingly, the projected amount needed for the final year of the agreement is no longer sufficient. The total cost for license renewal for Year 5 is now $142,099.44, which exceeds the budgeted amount of $130,000. Currently, the City has spent $475,024 of the total amount of the agreement, which leaves $204,976 unspent. The amendment before the City Council would allow the City to reallocate those unspent funds from the previous 4 years of the agreement to Year 5 of the agreement, the final year, to account for the increased cost of software licenses and any additional licensing needs that may arise.

**ALTERNATIVES:**

The City Council may deny the motion and provide alternative direction to staff.

**STRATEGIC PLAN:**

N/A

**SUBMITTED BY:**
Danielle Garcia, Management Services/Finance Director

**RECOMMENDED BY:**
Charles M. Duggan Jr., City Manager

**REVIEWED BY:**
Yvette M. Abich Garcia, City Attorney
Janice McConnell, Assistant City Manager

**PREPARED BY:**
Valerie Abrego, Management Analyst

---

## Fiscal Impact

| | |
|---|---|
| **Fiscal Year:** | 2025-2026 |
| **Revenue Generating:** | No |
| **Appropriation Required Y/N:** | No |
| **Budgeted Y/N:** | Yes |

**Discussion:**

There is no fiscal impact associated with the amendment. The unspent funds from the agreement will be carried over into the final renewal term from the amounts already approved in the Division of Innovation and Technology's budget for FY 2026.

---

## Attachments

Original Agreement with Liftoff LLC February 2022
First Amendment to Agreement with Liftoff LLC
Second Amendment to Agreement with Liftoff LLC

---

# AGREEMENT TO PERFORM PROFESSIONAL SERVICES

This agreement for the provision of professional software licensing and consulting services ("Agreement") is made and entered in this 1st day of February, 2022 ("Effective Date"), by and between the City of Redlands, a municipal corporation ("City") and LiftOff, LLC, a Maryland limited liability company ("Consultant"). City and Consultant are sometimes individually referred to herein as a "Party" and, together, as the "Parties." In consideration of the mutual promises contained herein, City and Consultant agree as follows:

## ARTICLE 1 – ENGAGEMENT OF CONSULTANT

1.1 City hereby engages Consultant to provide Microsoft Office 365 licensing and consulting services for City (the "Services").

1.2 The Services shall be performed by Consultant in a professional manner, and Consultant represents that it has the skill and the professional expertise necessary to provide the Services to City at a level of competency presently maintained by other practicing professional consultants in the industry providing like and similar types of Services.

## ARTICLE 2 – SERVICES OF CONSULTANT

2.1 The Services that Consultant shall perform are more particularly described in Exhibit "A," titled "Scope of Services," which is attached hereto and incorporated herein by reference.

2.2 Consultant shall comply with applicable federal, state and local laws and regulations in the performance of this Agreement including, but not limited to, any applicable State prevailing wage laws.

## ARTICLE 3 – RESPONSIBILITIES OF CITY

3.1 City designates Danielle Garcia, Management Services/Finance Director, as City's representative with respect to performance of the Services, and such person shall have the authority to transmit instructions, receive information, interpret and define City's policies and decisions with respect to performance of the Services.

## ARTICLE 4 – PERFORMANCE OF SERVICES

4.1 Consultant shall perform and complete the Services in a prompt and diligent manner in accordance with the schedule set forth in Exhibit "B," titled "Project Schedule," which is attached hereto and incorporated herein by reference.

4.2 The term of this Agreement shall be for a period of one (1) year from the Effective Date of this Agreement (the "Initial Term"). The City shall have the option to extend the Initial Term of this Agreement by four (4) additional one-year terms (each, an "Extended Term"), on the same terms and conditions, by providing written notice to Consultant at least thirty (30) days prior to the expiration of the Initial Term or any Extended Term

4.3 If Consultant's Services include deliverable electronic visual presentation materials, such materials shall be delivered in a form, and made available to City, consistent with City Council-adopted policy for the same. It shall be the obligation of Consultant to obtain a copy of such policy from City staff.

## ARTICLE 5 – PAYMENTS TO CONSULTANT

5.1 The total annual compensation for Consultant's performance of the Services shall be in the amount of one hundred sixty thousand dollars ($160,000) during the Initial Term, with four additional one-year extension options ("Extended Terms") of one hundred thirty thousand dollars ($130,000) bringing the total compensation during the Initial Term and four (4) Extension Terms to an amount of six hundred eighty thousand dollars ($680,000). City shall pay Consultant on a time and materials basis up to the not to exceed amount in accordance with Exhibit "C," titled "Fee Schedule," which is attached hereto and incorporated herein by reference.

5.2 Consultant shall submit monthly invoices to City describing the Services performed during the preceding month. Consultant's invoices shall include a brief description of the Services performed, the dates the Services were performed, the number of hours spent and by whom, and a description of reimbursable expenses related to the Services. City shall pay Consultant no later than thirty (30) days after receipt and approval by City of Consultant's invoice.

5.3 Any notice or other communication required, or which may be given, pursuant to this Agreement, shall be in writing. Any such notice shall be deemed delivered (i) on the date of delivery in person; (ii) five (5) days after deposit in first class registered mail, with return receipt requested; (iii) on the actual delivery date if deposited with an overnight courier; or (iv) on the date sent by facsimile or electronic mail transmission (including PDF), if confirmed with a copy sent contemporaneously by first class, certified, registered or express mail; in each case properly posted and fully prepaid to the appropriate address set forth below, or such other address as a Party may provide notice in accordance with this section:

CITY:

City Clerk
City of Redlands
35 Cajon Street
P.O. Box 3005 (mailing)
Redlands, CA 92373
jdonaldson@cityofredlands.org
Phone: (909) 798-7531

CONSULTANT:

Ronald Braatz, President
LiftOff, LLC
1667 Patrice Circle
Crofton, MD 21114
rbraatz@LiftOff, LLConline.com
Phone: (410)419-1591

## ARTICLE 6 – INSURANCE AND INDEMNIFICATION

6.1 The following insurance coverage required by this Agreement shall be maintained by Consultant for the duration of its performance of the Services. Consultant shall not perform any Services unless and until the required insurance listed below is obtained by Consultant. Consultant shall provide City with certificates of insurance and endorsements evidencing such insurance prior to commencement of the Services. Insurance policies shall include a provision prohibiting cancellation or modification of the policy except upon thirty (30) days prior written notice to City.

A. Workers' Compensation and Employer's Liability insurance in the amount that meets statutory requirements with an insurance carrier acceptable to City, or certification to City that Consultant is self-insured or exempt from the workers' compensation laws of the State of California. Consultant shall execute and provide City with Exhibit "D," titled "Workers' Compensation Insurance Certification," which is attached hereto and incorporated herein by this reference, prior to performance of the Services.

B. Comprehensive General Liability insurance with carriers acceptable to City in the minimum amount of One Million Dollars ($1,000,000) per occurrence and Two Million Dollars ($2,000,000) aggregate, for public liability, property damage and personal injury is required. City shall be named as an additional insured and such insurance shall be primary and non-contributing to any insurance or self-insurance maintained by City.

C. Consultant shall secure and maintain professional liability insurance throughout the term of this Agreement in the amount of One Million Dollars ($1,000,000) per claim made.

D. Business Auto Liability coverage, with minimum limits of One Million Dollars ($1,000,000) per occurrence, combined single limit bodily injury liability and property damage liability. This coverage shall include all Consultant owned vehicles used in connection with Consultant's provision of the Services, hired and non-owned vehicles, and employee non-ownership vehicles. City shall be named as an additional insured and such insurance shall be primary and non-contributing to any insurance or self-insurance maintained by City.

E. Consultant is expressly prohibited from assigning or subcontracting any of the Services without the prior written consent of City. In the event of mutual agreement by the Parties to assign or subcontract a portion of the Services, Consultant shall add such assignee or subcontractor as an additional insured to the insurance policies required hereby and provide City with the insurance endorsements prior to any Services being performed by the assignee or subcontractor.

6.2 Consultant shall defend, indemnify and hold harmless City and its elected and appointed officials, employees and agents from and against any and all claims, losses or liability, including attorneys' fees, arising from injury or death to persons or damage to property

occasioned by any negligent act or omission by, or the willful misconduct of, Consultant, or its officers, employees and agents in performing the Services.

## ARTICLE 7 – CONFLICTS OF INTEREST

7.1 Consultant covenants and represents that it does not have any investment or interest in any real property that may be the subject of this Agreement or any other source of income, interest in real property or investment that would be affected in any manner or degree by the performance of Consultant's Services. Consultant further covenants and represents that in the performance of its duties hereunder, no person having any such interest shall perform any Services under this Agreement.

7.2 Consultant agrees it is not a designated employee within the meaning of the Political Reform Act because Consultant:

A. Does not make a governmental decision whether to:

(i) approve a rate, rule or regulation, or adopt or enforce a City law;
(ii) issue, deny, suspend or revoke any City permit, license, application, certification, approval, order or similar authorization or entitlement;
(iii) authorize City to enter into, modify or renew a contract;
(iv) grant City approval to a contract that requires City approval and to which City is a party, or to the specifications for such a contract;
(v) grant City approval to a plan, design, report, study or similar item;
(vi) adopt, or grant City approval of, policies, standards or guidelines for City or for any subdivision thereof.

B. Does not serve in a staff capacity with City and in that capacity, participate in making a governmental decision or otherwise perform the same or substantially the same duties for City that would otherwise be performed by an individual holding a position specified in City's Conflict of Interest Code under Government Code section 87302.

7.3 In the event City determines that Consultant must disclose its financial interests, Consultant shall complete and file a Fair Political Practices Commission Form 700, Statement of Economic Interests, with the City Clerk's office pursuant to the written instructions provided by the City Clerk.

## ARTICLE 8 – GENERAL CONSIDERATIONS

8.1 In the event any action is commenced to enforce or interpret any of the terms or conditions of this Agreement the prevailing Party shall, in addition to any costs and other relief, be entitled to the recovery of its reasonable attorneys' fees, including fees for the use of in-house counsel by a Party.

8.2 Consultant shall not assign any of the Services, except with the prior written approval of City and in strict compliance with the terms and conditions of this Agreement. Any assignment or attempted assignment without such prior written consent may, in the sole discretion of City, result in City's immediate termination of this Agreement.

8.3 Consultant is for all purposes under this Agreement an independent contractor and shall perform the Services as an independent contractor. Neither City nor any its agents shall have control over the conduct of Consultant or Consultant's employees, except as herein set forth. Consultant shall supply all necessary tools and instrumentalities required to perform the Services. Assigned personnel employed by Consultant are for its account only, and in no event shall Consultant or personnel retained by it be deemed to have been employed by City or engaged by City for the account of, or on behalf of City. Consultant shall have no authority, express or implied, to act on behalf of City in any capacity whatsoever as an agent, nor shall Consultant have any authority, express or implied, to bind City to any obligation.

8.4 This Agreement may be terminated by City, in its sole discretion, by providing not less than five (5) days prior written notice to Consultant of City's intent to terminate. If this Agreement is terminated by City, an adjustment to Consultant's compensation shall be made, but (1) no amount shall be allowed for anticipated profit or unperformed Services, and (2) any payment due Consultant at the time of termination may be adjusted to the extent of any additional costs to City occasioned by any default by Consultant. Upon receipt of a termination notice, Consultant shall immediately discontinue its provision of the Services and, within five (5) days of the date of the termination notice, deliver or otherwise make available to City, copies (in both hard copy and electronic form, where applicable) of project related data, design calculations, drawings, specifications, reports, estimates, summaries and such other information and materials as may have been accumulated by Consultant in performing the Services. Consultant shall be compensated on a pro-rata basis for Services completed up to the date of termination.

8.5 Consultant shall maintain books, ledgers, invoices, accounts and other records and documents evidencing costs and expenses related to the Services for a period of three (3) years, or for any longer period required by law, from the date of final payment to Consultant pursuant to this Agreement. Such books shall be available at reasonable times for examination by City at the office of Consultant.

8.6 This Agreement, including the Exhibits incorporated herein by reference, represents the entire agreement and understanding between the Parties as to the matters contained herein, and any prior negotiations, written proposals or verbal agreements relating to such matters are superseded by this Agreement. Except as otherwise provided for herein, any amendment to this Agreement shall be in writing, approved by City and signed by City and Consultant.

8.7 This Agreement shall be governed by and construed in accordance with the laws of the State of California, without regard to its conflicts of laws provisions. The Parties agree that all actions or proceedings arising in connection with this Agreement shall be tried and

litigated only in the state courts located in San Bernardino County, California, and the federal courts located in Riverside County, California.

8.8 If one or more of the sentences, clauses, paragraphs or sections contained in this Agreement is declared invalid, void or unenforceable by a court of competent jurisdiction, the same shall be deemed severable from the remainder of this Agreement and shall not affect, impair or invalidate the remaining sentences, clauses, paragraphs or sections contained herein, unless to do so would deprive a Party of a material benefit of its bargain under this Agreement.

IN WITNESS WHEREOF, duly authorized representatives of City and Consultant have signed in confirmation of this Agreement.

CITY OF REDLANDS

By: _____
Paul T. Barich, Mayor

LIFTOFF, LLC

By: _____
Ronald Braatz, President

ATTEST:

_____
Jeanne Donaldson, City Clerk

EXHIBIT "A"

SCOPE OF SERVICES

LIFTOFF, LLC will provide Office 365 Guided Deployment Services (GDS) focused on the migration to the Microsoft Office 365 solution. The GDS consulting is delivered using a "Coach/Mentor" approach in which your IT team will be heavily involved throughout the entire process and will work directly with the LiftOff, LLC consultants. Together, we will work through a series of webinar appointments (typically 1-2 hours each) as we work through project milestones to deploy the system efficiently and successfully. We have found this approach of keeping your IT team invested in the project to be an extremely effective training mechanism; once the project is complete, your IT staff is fully capable of managing and maintaining the system in the future.

LiftOff, LLC's expertise is laser focused on the Office 365 systems. If you require integration with other third-party applications, you will be responsible for working with your other vendors to remedy issues. For example, phone systems, firewalls, fax systems, anti-spam, anti-virus, archiving, custom code environments, and accounting systems can integrate with Office 365. We will do our best to facilitate, but these integrations will likely require that product vendor.

**The Office 365 solution is quickly evolving, and the product roadmap changes frequently. It is important to understand that some features may be enhanced or modified during the project. The Microsoft TechNet articles are the best source of information today.**

Specifically, LiftOff, LLC's GDS work will:

**1.1.** Consist of an **Office 365 Assessment Workshop** where we will complete an analysis of the current email environment and ensure that requirements are captured, core functionality is reviewed, and details for the migration are discussed and reviewed. This planning session will be conducted via phone and typically takes about two hours to complete. Afterwards, we will map on the remainder of the project plan.

**1.2.** Consist of **Setup and Pre-Staging** in the Office 365 Admin Console where we will access your portal together and begin the initial configuration the new Office 365 tenant. This will include:

1.2.1. Adding and verifying your email domains in Office 365 to show ownership.
1.2.2. Ensure that the on-premises Active Directory is organized properly for Azure AD Connect/Directory Sync (required for a hybrid migration).
1.2.3. Install and configure Azure AD Connect to synchronize all mail-enabled objects (users, contacts, and groups) from on-premises Active Directory to Office 365/Azure. Typically, a new on-premises server will be required for this purpose.

**NOTE:** This does NOT include the setup, configuration, or support of ADFS or other third-party authentication systems.

1.2.4. Configure and test single sign-on with Azure AD Connect. A group policy will be required for this feature.

1.2.5. Install, configure, and test secure SMTP Relay going through Office 365.

**1.3.** This is an **Exchange to Office 365 migration, and we intend to perform TWO DIFFERENT Microsoft HYBRID migrations. We will complete the first hybrid migration, and then repeat the entire process (minus Admin training) for the second phase of the project.** This utilizes the built-in migration tools included with Office 365 at no additional cost. There are many advantages of using the hybrid migration path and we will make every attempt to make this work. In the extremely rare event that the hybrid (Microsoft) wizard cannot be used for email or Public Folders, we will switch to a third-party migration tool (MigrationWiz). Client is responsible for the cost of the migration tool. Migration Configuration will include the following:

1.3.1. Assess the on-premises Exchange environment and adjust the configuration, as needed, to optimize the hybrid process.
The source Exchange server MUST be fully accessible and fully updated for this to work.

1.3.2. Install and configure the Hybrid Configuration Wizard to establish the connection between the on-premises systems and Exchange Online for both mailbox migrations and intra-organizational mail flow.

1.3.3. Migrate the initial batch of users. This is normally one or more IT users who understand the process and potential troubleshooting that may be required post migration.

1.3.4. Provide documentation for end users regarding "What to Expect" and also Mobile Device configuration for the point of cutover.
**NOTE:** In nearly every migration, all mobile devices (phones and tablets) will need to have their mail profile reconfigured following the mailbox cutover.

1.3.5. Define a migration strategy for the remaining users and assist with any migration complications that may arise.

1.3.6. Migrate public folders from on-premises to Exchange Online.

1.3.7. Once all data is migrated, work with the Client to decommission the hybrid configuration and, if applicable, remove the on-premises Exchange server(s).

**1.4. Office 365 IT Admin Training & Tenant Configuration.** These training and configuration settings will span 6-10 sessions.

1.4.1. **Office 365 Admin Center**

1.4.1.1. Review the proper On-boarding process for new users.

1.4.1.2. Review the proper Off-boarding process for former users while maintaining compliance (if needed).

1.4.1.3. Promoting and demoting users with administrative abilities in Office 365.

1.4.1.4. Reviewing the Office 365 Message Center (for upcoming changes) and Health Dashboard (for potential problems).

1.4.2. **Exchange Admin Center**

1.4.2.1. Review management of email related attributes such as mailbox sharing, quotas, online archives, etc.
1.4.2.2. Review proper group creation process in the cloud.
1.4.2.3. Setup mail flow rules including inbound message warnings, outbound message disclaimers and Office Message Encryption (if applicable).
1.4.2.4. Setup mobile device rules and policies and review mobile device remote wipe.

1.4.3. **Exchange Online PowerShell**
1.4.3.1. Setup mailbox activity auditing.
1.4.3.2. Setup unlimited auto-expanding online archive (if applicable).
1.4.3.3. Review resource mailbox management.
1.4.3.4. Disable Microsoft 365 Group creation and review proper methods for creating these groups.

1.4.4. **Microsoft Teams Admin Center**
1.4.4.1. Review best practices for creating & managing Teams.
1.4.4.2. Configure optimized Teams settings for all users, groups, and Teams themselves.

1.4.5. **SharePoint Admin Center**
1.4.5.1. Configure best practices for sharing of files and folders in SharePoint, Teams and OneDrive.
1.4.5.2. Configure Sync settings for the organization.
1.4.5.3. Configure default OneDrive size

1.4.6. **Review Teams, OneDrive, Office Online & SharePoint**
1.4.6.1. Review the Teams app and website
1.4.6.2. Review OneDrive & SharePoint Online and best practices for ingesting files.
1.4.6.3. Review the OneDrive Sync Client and best practices for using it.

**1.5.** Review Office Online and best options for using Office apps in a browser.

**Securing Your Office 365 & Azure Organization.** We will work with your IT staff to ensure that all security and compliance best practices are in place by the conclusion of the project.

1.5.1. **Security Admin Center**
1.5.1.1. Configure appropriate anti-spam, anti-malware, and anti-phishing settings.
1.5.1.2. Configure outgoing message management including protection of unwanted external forwarding.
1.5.1.3. Configure DKIM, DMARC and SPF.
1.5.1.4. Review Secure Score

1.5.2. **Compliance Admin Center**
1.5.2.1. Configure online compliance retention policies (if applicable)
1.5.2.2. Review eDiscovery/Content Search process.
1.5.2.3. Review the Audit Log and enable Auditing for (non-mailbox) activity in Office 365.

1.5.3. **Azure Active Directory Security & Multi-Factor Authentication**
1.5.3.1. Review Risky Sign-ins, Risky Users and Risk Detections
1.5.3.2. Configure Risk Event Notifications for Admins

1.5.3.3. Configure Conditional Access Policies to prevent non-US logins (if applicable), require MFA for Admins (or All Users, if applicable) and block Legacy Authentication.

1.5.3.4. Review Sign-In Logs.

1.5.3.5. Optimize MFA Settings for the organization.

1.5.4. Review best practices for rolling out MFA (if applicable).

1.5.5. **This project will NOT include Microsoft's Endpoint Management or Intune Products.**

**1.6. Workstation Configuration**. LiftOff, LLC will offer guidance and tools for the workstation configuration.

1.6.1. LiftOff, LLC will work with the IT staff to setup an Office Deployment point on the network either as a network share using Microsoft's Office Deployment Tool or, if available, via System Center Configuration Manager (SCCM).

1.6.2. Review proper configuration of the Outlook desktop client at the point of mailbox cutover. **Cached Mode in desktop Outlook is required for Office 365 connectivity.**

**NOTE:** Although LiftOff, LLC will provide guidance regarding workstation configuration and assist with troubleshooting, LiftOff, LLC will NOT be directly responsible for the configuration of the workstations. Your IT staff is onsite and will complete this configuration.

**1.7. Post Mailbox Migration.** LiftOff, LLC will work with your IT staff to determine the best solution for decommissioning the Exchange hybrid pieces.

1.7.1. If applicable, work with the Client to remove the hybrid connection pieces and shutoff/remove the Exchange systems from the on-premises environment.

1.7.2. Alternatively, if desired, LiftOff, LLC can assist your organization with retaining an Exchange management server. **NOTE:** This is extremely uncommon and requires continuous administration, updating and upgrading to avoid known security issues with on-premises Exchange.

1.7.3. Update DNS settings facing the Internet and on-premises in Active Directory, as needed, to point all mailbox connectivity and mail flow (if needed) to Office 365/Exchange Online.

**1.8. Additional Microsoft Products.** This project does not include Microsoft products that aren't listed in this Statement of Work. For example, this project will not include ADFS, SharePoint website design, PowerBI, Microsoft Flow, Microsoft Project, or add-ons for Teams, Outlook, or Microsoft Office. Although LiftOff, LLC may be able to assist with various questions related to products not mentioned in this Statement of Work, your best source of assistance would be directly through Microsoft's support.

## 2. Investment & Payment Structure

**2.1.** The cost of the services outlined in Section 1 above is **$30,000.** This is the client cost and has already factored in any incentives or promotions. The discounted consulting price requires the Client to purchase AOS-G annual licensing through LIFTOFF, LLC for a period of three years. The AOS-G licensing includes a "price-lock" protection for three years. This pricing is valid for 30 days past the date identified in section 3.1. Invoicing is done after the Assessment Process (1.1) and terms are Net 30.

**2.2.** The client acknowledges that the Office 365 Microsoft Partner, LiftOff, LLC LLC, may receive payments from Microsoft as a result of the consulting done with LIFTOFF, LLC.

**2.3.** Migration Wiz Premium multi-pass licenses may be recommended for the project. If Client agrees to use Migration Wiz, Client will be responsible for purchasing licenses for all users. Migration Wiz licenses are typically $15 per mailbox. All migration licenses are purchased directly through LIFTOFF, LLC.

EXHIBIT "B"

PROJECT SCHEDULE

| Task | Duration |
|---|---|
| Kickoff / Assessment | 1 Day |
| Setup new government tenant, add domains, setup Azure AD Connect and setup the hybrid connector | 2 Days |
| Setup Office Deployment Tool & SMTP Relay Solution | 1 Day |
| IT Admin Training & Configuration Office Admin Center & Exchange Admin Center | 1 Day |
| Office Admin Center & Exchange Admin Center | 1 Day |
| Office 365 PowerShell | 1 Day |
| Office 365 Security & Compliance | 1 Day |
| Teams, SharePoint, OneDrive and Office Online | 2 Days |
| MFA & Azure AD Premium Security | 1 Day |
| Migrate IT Mailbox(es) | 1 Day |
| Migrate The Rest Of The Mailboxes | 2 Days |
| Migrate Public Folders to 365 | 1 Day |
| Hybrid wrap-up | 1 Day |
| Change Autodiscover to point to O365 | 1 Day |
| Remove on-premises Autodiscover Internal URI (SCP) | |
| Change Mail Flow To Exchange Online | |
| Review/Setup DMARC, DKIM and SPF | |
| Finalize The Migration & Remove Exchange On-Premises | |

EXHIBIT "C"

FEE SCHEDULE

| G SKU Item Name | Part Number | Term in Months | Price / User / Month | Licenses | Cost / Year |
|---|---|---|---|---|---|
| LiftOff, LLC Professional Services | | One Time Fee - Initial Year | | | $30,000 |
| Office 365 Plan G3 | AAA-11894 | 12 | $20.00 | 420 | $100,800.00 |
| Exchange Online Plan 2 | 3NS-00003 | 12 | $8.00 | 164 | $15,744.00 |
| Defender Plan 1 GCC | 3GU-00001 | 12 | $2.00 | 552 | $13,248.00 |
| Azure AD Premium 2 | MQN-00001 | 12 | $8.50 | 2 | $204.00 |

| | |
|---|---|
| **First Year Total** | **$159,996.00** |
| **Years 2-5 Total** | **$129,996.00** |

This Fee Schedule is an illustration of potential annual Microsoft Office 365 Licensing Costs. The numbers will fluctuate as City staffing levels increase or decrease, but will likely be much lower annually.

EXHIBIT "D"

WORKERS' COMPENSATION INSURANCE CERTIFICATION

Every employer, except the State, shall secure the payment of compensation in one or more of the following ways:

(a) By being insured against liability to pay compensation by one or more insurers duly authorized to write compensation insurance in this State.

(b) By securing from the Director of Industrial Relations, a certificate of consent to self-insure, either as an individual employer, or as one employer in a group of employers, which may be given upon furnishing proof satisfactory to the Director of Industrial Relations of ability to self-insure and to pay any compensation that may become due to his or her employees.

CHECK ONE

✓ I am aware of the provisions of Section 3700 of the Labor Code which requires every employer to be insured against liability for Workers' Compensation or to undertake self-insurance in accordance with the provisions of that Code, and I will comply with such provisions before commencing the performance of the work and activities required or permitted under this Agreement. (Labor Code §1861).

_____ I affirm that at all times, in performing the work and activities required or permitted under this Agreement, I shall not employ any person in any manner such that I become subject to the workers' compensation laws of California. However, at any time, if I employ any person such that I become subject to the workers' compensation laws of California, immediately I shall provide the City with a certificate of consent to self-insure, or a certification of workers' compensation insurance.

I certify under penalty of perjury under the laws of the State of California that the information and representations made in this certificate are true and correct.

LIFTOFF, LLC

By: Ronald Braatz _____ Date: 1-20-22 _____

Ronald Braatz, President

FIRST AMENDMENT TO AGREEMENT TO PERFORM PROFESSIONAL SERVICES

This first amendment ("First Amendment") to the agreement for professional software licensing and consulting services ("Agreement"), dated February 1, 2022, by and between the City of Redlands, a municipal corporation and a general law city ("City"), and Liftoff, LLC ("Consultant"), is made and entered into this 5th day of July 2023.

RECITALS

WHEREAS, it is the desire of the City and Consultant to amend their existing Agreement, specifically with regard to the performance of services and compensation schedule;

NOW, THEREFORE, for good and valuable consideration in the receipt of which is hereby acknowledged City and Consultant agree as follows:

AGREEMENT

Section 1. Article five (5) of the Agreement, entitled "Payments to Consultant," is hereby amended to read as follows:

> The total annual compensation for Consultant's performance of the Services shall be in the amount of sixty-five thousand dollars ($65,000) during the Initial Term, with four additional one-year extension options ("Extended Terms"). Compensation for the first one-year Extension Term shall be in the amount of two hundred twenty-five thousand dollars ($225,000). Compensation for each subsequent one-year Extension Term shall be in the amount of one hundred and thirty thousand dollars ($130,000) bringing the total compensation during the Initial Term and four (4) Extension Terms to an amount of six hundred eighty thousand dollars ($680,000) City shall pay Consultant on a time and materials basis up to the not to exceed amount in accordance with Exhibit " C," titled " Fee Schedule," which is attached hereto and incorporated herein by reference.

Section 2. All other provisions of the Agreement shall remain unchanged by this First Amendment and in effect.

IN WITNESS WHEREOF, the parties have executed this First Amendment, to be effective as of July 5, 2023.

CITY OF REDLANDS

Eddie Tejeda

Eddie Tejeda, Mayor

LIFTOFF, LLC

By: Ronald Braatz

Ronald Braatz, President

ATTEST:

Jeanne Donaldson

Jeanne Donaldson, City Clerk

I:\cmo\Agreements\First Amendment Liftoff, LLC FY22-0195.docx-jm

SECOND AMENDMENT TO AGREEMENT TO PERFORM PROFESSIONAL SERVICES

This second amendment ("Second Amendment") to the agreement for professional software licensing and consulting services ("Agreement"), dated February 1, 2022 by and between the City of Redlands, a municipal corporation and a general law city ("City"), and Liftoff LLC, a Delaware limited liability company ("Consultant"), is made and entered into this 16th day of September, 2025.

RECITALS

WHEREAS, it is the desire of the City and Consultant to amend their existing Agreement, specifically regarding total compensation.

NOW, THEREFORE, for good and valuable consideration in the receipt of which is hereby acknowledged City and Consultant agree as follows:

AGREEMENT

Section 1. Article 5 of the Agreement, entitled "Payments to Consultant," is hereby amended to read as follows:

"5.1 The total annual compensation for Consultant's performance of the Services shall be in the amount of Sixty-Five Thousand Dollars ($65,000) during the Initial Term, with four additional one-year Extended Terms. Compensation for the first one-year Extended Term shall be in the amount of Two Hundred Twenty-Five Thousand Two Hundred Eighty Seven Dollars ($225,287). Compensation for the second one-year Extended Term shall be in the amount of Forty-Nine Thousand One Hundred Fifty-Six Dollars ($49,156). Compensation for the third one-year Extended Term shall be in the amount of One Hundred Thirty-Seven Thousand One Hundred Twenty-Eight Dollars ($137,128). Compensation for the fourth Extended Term shall be in the amount not to exceed Two Hundred Three Thousand Four Hundred Twenty-Nine Dollars ($203,429) bringing the total compensation during the Initial Term and four (4) Extended Terms to an amount not to exceed Six Hundred and Eighty Thousand Dollars ($680,000). City shall pay Consultant on a time and materials basis up to the not to exceed amount in accordance with Exhibit " C," titled " Fee Schedule," which is attached hereto and incorporated herein by reference.

Section 2. Exhibit "C" of the Agreement, entitled "Fee Schedule," is hereby amended as shown in Attachment "1," attached to this Amendment.

Section 3. All other provisions of the Agreement shall remain unchanged by this Second Amendment and in effect.

CITY OF REDLANDS

By: _____
Mario Saucedo, Mayor

ATTEST:

_____
Jeanne Donaldson, City Clerk

LIFTOFF LLC

By: _____
Ronald Braatz, President

Attachment 1

EXHIBIT "C"

FEE SCHEDULE

| G SKU Item Name | Part Number | Term in Months | Price/User/Month | Licenses | Cost/Year |
|---|---|---|---|---|---|
| Liftoff, LLC Professional Services | | One Time Fee-Initial Year | | | $ 30,000.00 |
| Office 365 Plan G3 | AAA-111894 | 12 | $ 20.00 | 420 | $ 100,800.00 |
| Exhange Online Plan 2 | 3NS-00003 | 12 | $ 8.00 | 164 | $ 15,744.00 |
| Defender Plan 1 GCC | 3GU-00001 | 12 | $ 2.00 | 552 | $ 13,248.00 |
| Azure AD Premium 2 | MQN-00001 | 12 | $ 8.50 | 2 | $ 204.00 |
| | | | | First Year Total | $ 159,996.00 |
| | | | | Years 2-4 Total | $ 129,996.00 |

| G SKU Item Name | Part Number | Term in Months | Price/User/Month | Licenses | Cost/Year |
|---|---|---|---|---|---|
| Office 365 Plan G3 | AAA-111894 | 12 | $ 25.30 | 386 | $ 117,189.60 |
| Exhange Online Plan 2 | 3NS-00003 | 12 | $ 7.50 | 151 | $ 13,590.00 |
| Defender Plan 1 GCC | 3GU-00001 | 12 | $ 1.88 | 444 | $ 10,016.64 |
| M365 Copilot GCC | EP2-24658 | 12 | $ 37.50 | 1 | $ 450.00 |
| Power Automate Premium per User GCC | 1O5-00001 | 12 | $ 16.50 | 1 | $ 198.00 |
| Power BI Pro GCC | DDJ-00001 | 12 | $ 9.40 | 4 | $ 451.20 |
| Entra ID P2 GCC | MQN-00001 | 12 | $ 8.50 | 2 | $ 204.00 |
| | | | | Year 5 Total | $ 142,099.44 |

**City Council/Financing Authority Meeting** **I. 11.**

**DATE:** 09/16/2025

**TO:** Honorable Mayor and City Council Members

**SUBJECT:** Approve an Intergovernmental Agreement with Burtronics Business Systems for managed print services for an initial term of three years for $175,000, with an option for a one-year extended term for a total amount not-to-exceed $235,000 for as-needed services (Management Services/Finance Director Garcia)

---

**MOTION(S):**

If the City Council determines that staff's recommendation is appropriate, the following motion(s) is provided:

I move to approve the Intergovernmental agreement with Burtronics Business Systems for Managed Print Services for an initial term of three years for $175,000, with an option for a one-year extended term for a total amount not-to-exceed $235,000 for as-needed services.

**RECOMMENDATION:**

Staff recommends that the City Council approve the Intergovernmental agreement with Burtronics Business Systems for citywide Managed Print Services which includes support, maintenance, and supplies for all SHARP machines in the City for an initial term of three years for $175,000 with the option for a one-year extended term for a total amount not-to-exceed $235,000 for as-needed services.

**DISCUSSION:**

The City of Redlands utilizes multi-function devices (MFDs), commonly referred to as "copiers", throughout the City to facilitate daily operations. These MFDs have the ability to copy, print, fax, and scan. In 2020, the City entered into a five-year lease agreement for 30 Sharp Electronics multi-function devices with De Lage Landen Public Finance, LLC with a nominal buy-out option for these

devices at the end of the lease. After recently concluding that five-year lease in July of 2025, the City now owns 33 Sharp MFDs spread across various City facilities.

Also in 2020, the City executed an agreement with a vendor for Managed Print Services that also concluded in July 2025, and has been operating on a month-to-month agreement with that vendor while a new procurement process was underway. For background, Managed Print Services is an industry term that describes on-demand printer supply replacement and on-site technician services for copiers and printing equipment.

Staff followed the City's procurement guidelines by examining and selecting an existing competitively-bid cooperative contract agreement with the National Association of State Procurement Officials (NASPO) ValuePoint. NASPO is a non-profit association made up of the directors of the central purchasing offices of the 50 states, District of Columbia and territories of the United States. By utilizing the NASPO ValuePoint cooperative purchasing agreement, the City is able to benefit from the combined purchasing power of more than 50,000 government, education, and nonprofit organizations to take advantage of preferred pricing and administrative efficiencies.

Under the NASPO's Authorized Sharp Electronics' Dealer List for Multi-Function Devices and related software, services, and cloud solutions, City staff researched several vendors chosen at random, determined whether they could offer Managed Print Services to the City of Redlands, elicited reviews from those vendors' current clients, and finally, solicited quotes from the highly rated remaining vendors based on the City's fleet of MFDs. The quotes were provided under the current industry standard that organizations use to avoid pre-payment of printing volumes that they may not use. This metric is called "Cost Per Click", and ensures that only actual printing volumes will be charged in arrears and accounts for the maintenance, support, and supplies needed to sustain our City-owned machines.

Burtronics Business Systems has served Inland Empire Businesses since 1985 and currently serves nearby municipalities and public entities to high acclaim. Their current proposal for the City of Redlands will be an all-inclusive service and supply agreement that will include all parts, labor, toner, drums and consumable items for the Sharp MFDs, and will provide invoices using monitoring software for supply and service alerts to deliver accurate meter readings and invoice the City on a monthly basis. Their services will allow the City to add or remove MFDs per the City's needs and will also include on-site support, helpdesk support, and report support, and will directly ship supplies to our MFD locations across the City.

Based on staff's assessment, Burtronics' proposed Managed Print Services for the 33 City-owned Sharp Multi-Function Devices, are recommended to be sourced through the NASPO cooperative purchasing agreement for an initial

term of three years for $175,000 with an option for a one-year extended term for a total amount not-to-exceed $235,000 for as-needed services.

**ALTERNATIVES:**

City Council may choose to reject, modify, or table the proposed purchase and the City may continue to pay a month-by-month contract with their previous Managed Print Services vendor.

**STRATEGIC PLAN:**

N/A

**SUBMITTED BY:**
Danielle Garcia, Management Services/Finance Director

**RECOMMENDED BY:**
Charles M. Duggan Jr., City Manager

**REVIEWED BY:**
Yvette M. Abich Garcia, City Attorney
Janice McConnell, Assistant City Manager
Dana Abramovitz, Procurement Manager

**PREPARED BY:**
Valerie Abrego, Management Analyst

---

**Fiscal Impact**

| | |
|---|---|
| **Fiscal Year:** | 2025-2026 |
| **Revenue Generating:** | No |
| **Appropriation Required Y/N:** | No |
| **Amount:** | $235,000 |
| **Budgeted Y/N:** | Y |
| **Account No.:** | 604900 |

**Discussion:**

The total costs associated with the management of Multi-Function Devices are currently included in the IT Division's Budget for FY 2026. Future years' costs will be included in subsequent budget requests. Burtronics is willing to hold the Cost Per Click (CPC) rates significantly under NASPO's posted CPC rates for the duration of the agreement with the City.

**Attachments**

Burtronics Intergovernmental Request Form
NASPO Master Agreement 188627
CA Participating Addendum
MPS Statement of Work
EXHIBIT A MFD Fleet List
Exhibit B- Fee Schedule Title

# Intergovernmental/ Piggyback Contract Use Request

(Attach to PR form)

The Management Services-DoIT department requests the purchase of the following item(s) from:

| |
|---|
| Original Contracting Entity:<br>NASPO Value Point Cooperative Purchasing Program through State of Colorado and Sharp Electronics Corporation |
| Contract#:<br>Master Agreement 188627 and State of California Participating Addendum 7-24-70-46-07 |
| Contract Term:<br>08/01/24-07/31/26 (Limit to renew: 07/31/29) |
| Method of original contract award:<br>X-Competitive<br>Non-Competitive, based on: Preferred source Sole Single source Emergency<br><br>Other: |
| Does the original contract contain language contemplating contract extension to additional users?<br><br>X- Yes No |

**Please attach: vendor agreement to sale to the City AND Entity agreement/contract language allowing Piggyback**

| Description of Product/Service intend to acquire | Unit Price | Total |
|---|---|---|
| Managed Print Services on all Sharp MFDs | | |
| -All-inclusive Services/Supplies/Support | | |
| -Cost Per Click w/OEM Supplies (Billed Monthly) | | |
| Monochrome Pages | $0.0089 | |
| Color Pages | $0.0524 | |
| | | |
| | | |
| Tax | 8.75% | |
| **Grand Total** | | $235,000.00-NTE |

| | |
|---|---|
| Vendor: | Burtronics Business Systems |
| Contact: | Randolph Hlebasko |
| Address 1: | 290 West Orange Show Road |
| Address 2: | Suite 101 |
| City/State/Zip: | San Bernardino, CA 92408 |
| Telephone: | 800-523-0822 |
| Fax: | - |
| Web/E-Mail: | www.burtronics.com |

| **Delivery/Service Location** | |
|---|---|
| Contact: | Eric Owens |
| Telephone: | 909-335-4795 |
| Department: | Management Svcs.-DoIT |
| Address 1: | 35 Cajon Street |
| Address 2: | Suite 222 |
| Additional Comments | |

---

**Purchasing Agent Approval:** _____ **Date:** _____

**City Manager Approval:** _____ **Date:** _____

DocuSign Envelope ID: CE9EDE21-548B-4156-BDF8-8383A0FC97D0

# NASPO ValuePoint Master Agreement Terms and Conditions

## For Multi-Function Devices and Related Software, Services and Cloud Solutions

A Contract for the NASPO ValuePoint Cooperative Purchasing Program
Acting by and through the **State of Colorado** (Lead State)

**Department of Personnel & Administration**
**State Purchasing & Contracts Office**
**1525 Sherman Street, 5th Floor**
**Denver, Co 80203**

And

**Sharp Electronics Corporation**
**100 Paragon Drive**
**Montvale, NJ 07645**

**Master Agreement Number: 188627**

# Contents

MASTER AGREEMENT TERMS AND CONDITIONS ..... 3
I. Definitions ..... 3
II. Parties and Term of the Master Agreement ..... 7
III. Order of Precedence ..... 8
IV. Participants and Scope ..... 8
V. NASPO ValuePoint Provisions ..... 10
VI. Pricing, Payment & Leasing ..... 13
VII. Ordering ..... 14
VIII. Shipping and Delivery ..... 17
IX. Inspection and Acceptance ..... 18
X. Warranty ..... 19
XI. Equipment Title ..... 20
XII. Indemnification ..... 21
XIII. Insurance ..... 22
XIV. General Provisions ..... 24
SIGNATURE PAGE ..... 30
EXHIBIT A – STATEMENT OF WORK ..... 31
I. Product Overview ..... 31
II. Master Agreement Deliverables ..... 32
III. Purchase, Lease and Rental Programs ..... 42
IV. Contractor Responsibilities and Tasks ..... 48
EXHIBIT B – SAMPLE D&A CERTIFICATE ..... 58
EXHIBIT C – AUTHORIZED DEALER FORM ..... 59
EXHIBIT D – AUTHORIZED DEALERS BY STATE ..... 60
ATTACHMENT 1 – SHARP LEASE AGREEMENT ..... 61
ATTACHMENT 2 – SHARP MAINTENANCE AGREEMENT ..... 66
ATTACHMENT 3 – SHARP SAMPLE MPS STATEMENT OF WORK ..... 71

# MASTER AGREEMENT TERMS AND CONDITIONS

## I. Definitions

**1.1** **A3 MFD** - A Multi-function Device which is designed to handle letter, legal, ledger and some smaller paper sizes, such as postcards and envelopes.

**1.2** **A4 MFD –** A Multi-function Device which is designed to handle letter, legal and some smaller paper sizes, such as postcards and envelopes. Ledger size paper is NOT an option on this Device.

**1.3** **Acceptance** - A written notice from a Purchasing Entity to Contractor advising Contractor that the Device has passed its Acceptance Testing. Acceptance of a Product for which Acceptance Testing is not required shall occur following the completion of delivery, installation, if required, and a reasonable time for inspection of the Product, unless the Purchasing Entity provides a written notice of rejection to Contractor, as set forth in **section IX** of this Master Agreement.

**1.4** **Accessory** – A compatible item that is added to the Base Unit to enhance its capabilities and functions.

**1.5** **Attachment** – Contractor's Supplemental Documents which consist of the following:

**1.5.1** Attachment 1 – Sharp Lease Agreement

**1.5.2** Attachment 2 – Sharp Maintenance Agreement

**1.5.3** Attachment 3 – Sharp Sample MPS Statement of Work

**1.6** **Authorized Dealer** – The Manufacturer's authorized sales and Service center (also known as a Dealer, Distributor, or Partner) that must be certified by the Manufacturer to sell the Manufacturer's Products, and perform machine installation and maintenance on Devices offered by the Manufacturer. A Purchasing Entity must be able to, at a minimum, visit the sales and service center to view and test Device.

**1.7** **Base Unit** - The copier, printer, Scanner, Large/Wide Format and Production Devices that include all standard Accessories and parts and excludes optional Accessories and/or software.

**1.8** **Blended Rate** - A rate that is derived by taking the b&w and color cost per click rates on one or more Devices and calculating one rate that a customer will be billed for all copies, regardless of Device type and b&w or color output. Allows for simplicity when billing copies run.

**1.9** **Bronze Standard** - Devices which meet less than 50% of the 28 optional EPEAT criteria.

**1.10** **Business Day** – Any day other than Saturday, Sunday, or a legal holiday.

**1.11** **Buyout to Keep** - The early termination option on an FMV or Capital Lease that involves the acquisition of the Device by the Purchasing Entity, and consists of any current and past due amount, plus the remaining stream of Device Payments.

**1.12** **Buyout to Return** - The early termination option on an FMV, Capital or Straight Lease that involves the return of the Device by the Purchasing Entity to Contractor, in good working condition (ordinary wear and tear excepted), and consists of any current and past due amounts, plus the remaining stream of Device Payments.

**1.13** **Cancellable Rental** - An agreement that is cancellable upon the Purchasing Entity

providing the Contractor with a thirty (30) day written notice, and is subject to a maximum penalty of up to three (3) months of Total Monthly Payments. Device ownership is not an option.

**1.14** **Capital Lease** - For the purposes of this Master Agreement, a Capital Lease shall also be referred to as a $1 Buyout Lease and title of the Device will automatically pass from the Contractor to the Purchasing Entity at the end of the Initial Lease Term, and the Purchasing Entity will not be subject to additional payments in order to assume ownership. However, it will be at the discretion of the Participating State or Entity as to whether other criteria will also be considered, such as a bargain purchase option, a lease term longer than 75% of the estimated economic life of the Device, or the present value of the lease payments is greater than 90% of the fair market value of the Device at the beginning of the Initial Lease Term, or any other legal requirements relating to a Capital Lease.

**1.15** **Ceiling Pricing** - Pricing that is established as a “not-to-exceed” amount; the maximum price Contractor may charge for Products, Services, and Supplies.

**1.16** **Contractor** - A party to this Master Agreement, whether a person or entity, that delivers goods or performs services under the terms set forth in this Master Agreement.

**1.17** **Coterminous** - Two or more leases or rentals that end at the same time. The original lease or rental payment is modified to reflect the addition of a new Device or Accessory. The original term of the lease or rental is not modified as a result of a Coterminous addition.

**1.18** **Deliverable** - A Product, Service, solution, result, labor, or other effort being sought through this RFP.

**1.19** **Device** - The Base Unit, either with or without optional Accessories and/or software. May also be referred to as “Equipment.”

**1.20** **Device Downtime** - The period of time that a Device is not operational and is waiting for Service to be completed.

**1.21** **Device Payment** - The Device portion of the payment, less any Service, Supplies, and maintenance.

**1.22** **Device Trade-In** - An agreed upon transaction between the Purchasing Entity and Contractor, in which Contractor takes ownership of Purchasing Entity’s owned Device, often for a discounted amount.

**1.23** **Device Upgrade or Downgrade** - A replacement of the Purchasing Entity’s existing lease or rental Device, with a different Device, of either greater or lesser value. A new lease or rental is then originated for the new Device, with the remaining lease or rental payments on the old Device wrapped into it. The old lease or rental is closed out, and the Device is returned to Contractor.

**1.24** **Electronic Product Environmental Assessment Tool (EPEAT)** - A tool which evaluates and selects Device according to a list of preferred environmental attributes. EPEAT registered means Devices meet the 1680.2 IEEE Standard for Environmental Assessment of Imaging Device, as amended.

**1.25** **Embedded Software** - One or more software applications which permanently reside on a computing Device.

**1.26** **Energy Star** - The U.S. Environmental Protection Agency’s standard for energy efficiency.

**1.27** **Fair Market Value (FMV) Lease** - A lease in which the Purchasing Entity can either 1) Take title to the Device at the end of the Initial Lease Term by paying the residual value to Contractor, 2) Enter into a Renewal Term for the Device, or 3) Return the Device to

Contractor at the end of the Initial Lease Term.

**1.28** **Free on Board (FOB) Destination** - Contractor is responsible for transportation and handling charges and the sale does not occur until the Products arrive at the Purchasing Entity's specified location.

**1.29** **Group** - The classification for the different types of Devices solicited in this RFP. Groups are determined by the Devices primary functions and/or capabilities.

**1.30** **Initial Lease or Rental Term** - The length of time (i.e. 12, 18, 24, 36, 48, 60 months) that a Purchasing Entity enters into a lease or rental agreement.

**1.31** **Intellectual Property** - Any and all patents, copyrights, service marks, trademarks, trade secrets, trade names, patentable inventions, or other similar proprietary rights, in tangible or intangible form, and all rights, title, and interest therein.

**1.32** **Lead State -** The State centrally administering any resulting Master Agreement(s) who is a party to this Master Agreement.

**1.33** **Legacy Device** – A Device that was purchased, leased, or rented either under a prior NASPO ValuePoint or WSCA Master Agreement, another program, or via any other means.

**1.34** **Maintenance Agreement** - An agreement in which the Contractor provides monthly Service, parts, Supplies, and Preventative Maintenance on purchased, leased or rented Devices.

**1.35** **Managed Print Services (MPS)** - The management, service, and support of the Purchasing Entity's entire enterprise and output infrastructure of printed materials, with the objective of creating a solution that improves the print process and reduces the expense of printed material.

**1.36** **Manufacturer** - A company that, as its primary business function, designs, assembles, and owns the trademark/patent and markets a Device. Also referred to as Contractor.

**1.37** **Manufacturer's Suggested Retail Price (MSRP)** - The list price or recommended retail price of a Product in which the Manufacturer recommends that the retailer sell the Product.

**1.38** **Master Agreement** - The underlying agreement executed by and between the Lead State, acting in cooperation with NASPO ValuePoint, and the Contractor, as now or hereafter amended.

**1.39** **Multi-function Device (MFD)** - A Device which incorporates the functionality of multiple Devices into one, such as print, fax, copy and scan. Each feature can work independently of the other.

**1.40** **NASPO ValuePoint** - A division of the National Association of State Procurement Officials ("NASPO"), a 501(c)(3) corporation. NASPO ValuePoint facilitates administration of the NASPO cooperative group contracting consortium of state chief procurement officials for the benefit of state departments, institutions, agencies, and political subdivisions and other eligible entities (i.e., colleges, school districts, counties, cities, some nonprofit organizations, etc.) for all states, the District of Columbia, and territories of the United States. NASPO ValuePoint is identified in the Master Agreement as the recipient of reports and may perform contract administration functions relating to collecting and receiving reports, as well as other contract administration functions as assigned by the Lead State.

**1.41** **Newly Manufactured** - Devices that have not been Refurbished, Remanufactured, rented, leased, sold, or used in a demonstration, and are currently being marketed by the Manufacturer.

**1.42** **Normal Business Hours** – Defined as the hours between 8AM and 5PM, Monday through Friday, holidays excluded.

**1.43** **Not Specifically Priced (NSP)** - NSP items enhance or compliment the Device but are not listed in the Master Agreement Price List(s). NSP's may include Coin-Op Equipment, empowering software etc.

**1.44** **OEM** – The Original Equipment Manufacturer.

**1.45** **Order** - Any type of encumbrance document or commitment voucher, including, but not limited to, a purchase order, contract, MPS statement of work, Maintenance Agreement, lease agreement, rental agreement etc. used by a Purchasing Entity to order the Products and Services.

**1.46** **Participating Addendum –** A bilateral agreement executed by a Contractor and a Participating Entity incorporating this Master Agreement and any additional Participating Entity-specific language or other requirements (*e.g.*, ordering procedures specific to the Participating Entity, entity-specific terms and conditions, etc.).

**1.47** **Participating Entity -** A state (as well as the District of Columbia and US territories), city, county, district, other political subdivision of a State, or a nonprofit organization under the laws of some states properly authorized to enter into a Participating Addendum, that has executed a Participating Addendum.

**1.48** **Participating State** - A state that has executed a Participating Addendum or has indicated an intent to execute a Participating Addendum.

**1.49** **Power Filter** - An electronic filter which is placed between an external power line and a Device for the purpose of removing frequencies or electromagnetic interference.

**1.50** **Preventative Maintenance** - The servicing of a Device for the purpose of maintaining a satisfactory operating condition by providing systematic inspection, detection, and correction of failures either before they occur or before they develop into major defects.

**1.51** **Private Label** - Devices that are manufactured by one company and sold under a retailer's brand name.

**1.52** **Product** – Devices, Accessories, parts, software, and/or Supplies provided by Contractor pursuant to the Master Agreement.

**1.53** **Published Price** – The price that is posted on the Manufacturer's website or in their pricing literature (e.g. not the Master Agreement contract price).

**1.54** **Purchasing Entity** - A state (as well as the District of Columbia and US territories), city, county, district, other political subdivision of a State, or a nonprofit organization under the laws of some states if authorized by a Participating Addendum, that issues a Purchase Order against the Master Agreement and becomes financially committed to the purchase.

**1.55** **Refurbished** - A Device which has received extensive maintenance and/or minor repair, including the replacement of all standard parts subject to wear during the normal course of use. For the purpose of this RFP and resulting Master Agreement(s), Refurbished Device shall not have more than 750,000 original copies on it. In addition, Refurbished Device must only contain OEM parts. Refurbished Device must be certified by the Manufacturer.

**1.56** **Remanufactured** - The process of disassembling Devices known to be worn or defective that can be reused or brought up to OEM specification by cleaning, repairing or replacing it in a manufacturing environment and then reassembling and testing it, so that it will operate like a new Device. Remanufactured Device must be certified by the Manufacturer.

**1.57** **Renewal Term** - A lease term that supersedes the Initial Lease Term, and which a Purchasing Entity may enter into upon thirty (30) days prior written notice to Contractor. Each Renewal Term shall not exceed 12 months, the residual value of the Device, or the Useful Life of the Device. Capital Leases are excluded from going into renewal.

**1.58** **Response Time** - The time from when the original Service Call is placed with the Contractor or Authorized Dealer, to when the Service technician arrives at the Purchasing Entity's location.

**1.59** **Scanner** - A Device that scans documents and converts it into digital data.

**1.60** **Segment** - The various speeds that Devices are categorized by.

**1.61** **Services** – The labor required to be performed by Contractor pursuant to the Master Agreement or an Order. Services may include, but are not limited to, maintenance, MPS and software installation.

**1.62** **Service Base Location** - The place of business where the Contractor or Authorized Dealer stores parts and provides training for service technicians.

**1.63** **Service Call** - An on-site Service technician visit due to Device error or malfunction.

**1.64** **Short-Term Rental** - A type of agreement in which ownership is not an option and the maximum rental term does not exceed 18 months.

**1.65** **Single-function Printer** - An inkjet or laser Device that only prints and is not capable of other functions such as copying, faxing or scanning.

**1.66** **Straight Lease** - A type of agreement in which ownership is not an option and the Total Monthly Payment amount remains firm throughout the Initial Term.

**1.67** **Supplemental Documents** – With the exception of software, end-user and click-wrap agreements, Contractor's Supplemental Documents are the only authorized documents under this Master Agreement and are attached hereto as Attachments.

**1.68** **Supplies** - Consumable items that gets used up or are discarded once used, such as ink cartridges.

**1.69** **Third Party** – A person or entity that may be directly involved, but is not a principal to an arrangement, contract, deal, lawsuit, or transaction.

**1.70** **Total Monthly Payment** - The Device portion of the payment, as well as any Service, Supplies or maintenance, and less any applicable taxes.

**1.71** **Useful Life** - Period during which a Device is expected to be usable for the purpose in which it was manufactured.

## II. Parties and Term of the Master Agreement

**2.1** **Parties.** This Master Agreement is entered into by and between the State of Colorado, acting by and through the Department of Personnel & Administration, State Purchasing & Contracts Office (hereinafter called the "Lead State"), and Sharp Electronics Corporation. (hereinafter called "Contractor"), for the procurement of A3 MFD's, A4 MFD's, Single-function Printers, Scanners, Software, Consumable Supplies, Managed Print Services, and Software Related Services (including cloud-based offerings and web-based fleet management tools), as approved per this Master Agreement, for the benefit of Participating States, Entity's, and Purchasing Entities. The Contractor and the Lead State agree to the terms and conditions contained herein.

**2.2** **Initial Term.** The initial term of this Master Agreement is for two (2) years, with an effective date of August 1, 2024. The term of this Master Agreement may be amended beyond the initial term for up to three (3) consecutive one (1) year additional terms, upon the mutual agreement of the Lead State and Contractor, by written Amendment. The total duration of the Master Agreement, including any extensions, shall not exceed five (5) years.

**2.3** **Amendment Limitations.** The terms of this Master Agreement will not be waived, altered, modified, supplemented, or amended in any manner whatsoever without prior written agreement of the Lead State and Contractor.

## III. Order of Precedence

**3.1** **Order.** This Master Agreement will consist of the following documents:

**3.1.1** A Participating Entity's Participating Addendum ("PA");

**3.1.2** NASPO ValuePoint Master Agreement, including all Exhibits;

**3.1.3** An Order issued against the Master Agreement;

**3.1.4** The Solicitation, RFP-NP-23-001, Multi-Function Devices and Related Software, Services and Cloud Solutions;

**3.1.5** Contractor's response to the Solicitation, as revised (if permitted) and accepted by the Lead State; and

**3.1.6** Contractor's Supplemental Documents, which are included as Attachments.

**3.2** **Conflict.** These documents will be read to be consistent and complementary. Any conflict among these documents will be resolved by giving priority to these documents in the order listed above. Contractor terms and conditions that apply to this Master Agreement are only those that are expressly accepted by the Lead State and must be in writing and attached to this Master Agreement as an Exhibit or Attachment.

**3.3** **Participating Addenda.** Participating Addenda will not be construed to diminish, modify, or otherwise derogate any provisions in this Master Agreement between the Lead State and Contractor. Participating Addenda will not include a term of agreement that exceeds the term of the Master Agreement, nor will it include Products and Services not awarded under the Master Agreement.

## IV. Participants and Scope

**4.1** **Requirement for a Participating Addendum.** Contractor may not deliver Products under this Master Agreement until a Participating Addendum acceptable to the Participating Entity and Contractor is executed.

**4.2** **Applicability of Master Agreement.** NASPO ValuePoint Master Agreement Terms and Conditions are applicable to any Order by a Participating Entity (and other Purchasing Entities covered by their Participating Addendum), except to the extent altered, modified, supplemented or amended by a Participating Addendum, subject to **section III**. For the purposes of illustration and not limitation, this authority may apply to unique delivery and invoicing requirements, confidentiality requirements, defaults on Orders, governing law and venue relating to Orders by a Participating Entity, indemnification, and insurance requirements. Statutory or constitutional requirements relating to availability of funds may require specific language in some Participating Addenda in order to comply with applicable law. The expectation is that these alterations, modifications, supplements, or amendments will be addressed in the Participating Addendum or, with the consent of the Purchasing

Entity and Contractor, may be included in the ordering document (*e.g.*, purchase order or contract) used by the Purchasing Entity to place the Order.

**4.3 Authorized Use.** Use of specific NASPO ValuePoint Master Agreements by state agencies, political subdivisions and other Participating Entities is subject to applicable state law and the approval of the respective State Chief Procurement Official. Issues of interpretation and eligibility for participation are solely within the authority of the respective State Chief Procurement Official.

**4.4 Obligated Entities.** Obligations under this Master Agreement are limited to those Participating Entities who have signed a Participating Addendum and Purchasing Entities within the scope of those Participating Addenda. States or other entities permitted to participate may use an informal competitive process to determine which Master Agreements to participate in through execution of a Participating Addendum. Participating Entities incur no financial obligations on behalf of other Purchasing Entities.

**4.5 Notice of Participating Addendum.** Contractor shall email a fully executed PDF copy of each Participating Addendum to pa@naspovaluepoint.org to support documentation of participation and posting in appropriate databases.

**4.6 Eligibility for a Participating Addendum.** Eligible entities who are not states may under some circumstances sign their own Participating Addendum, subject to the consent of the Chief Procurement Official of the state where the entity is located. Coordinate requests for such participation through NASPO ValuePoint. Any permission to participate through execution of a Participating Addendum is not a determination that procurement authority exists; the entity must ensure that they have the requisite procurement authority to execute a Participating Addendum.

**4.7 Prohibition on Resale.** Subject to any specific conditions included in the solicitation or Contractor's proposal as accepted by the Lead State, or as explicitly permitted in a Participating Addendum, Purchasing Entities may not resell Products purchased under this Master Agreement. Absent any such condition or explicit permission, this limitation does not prohibit: payments by employees of a Purchasing Entity for Products; sales of Products to the general public as surplus property; and fees associated with inventory transactions with other governmental or nonprofit entities and consistent with a Purchasing Entity's laws and regulations. Any sale or transfer permitted by this subsection must be consistent with license rights granted for use of intellectual property.

**4.8 Individual Customers.** Except as may otherwise be agreed to by the Purchasing Entity and Contractor, each Purchasing Entity shall follow the terms and conditions of the Master Agreement and applicable Participating Addendum and will have the same rights and responsibilities for their purchases as the Lead State has in the Master Agreement and as the Participating Entity has in the Participating Addendum, including but not limited to any indemnity or right to recover any costs as such right is defined in the Master Agreement and applicable Participating Addendum for their purchases. Each Purchasing Entity will be responsible for its own charges, fees, and liabilities. The Contractor will apply the charges and invoice each Purchasing Entity individually.

**4.9 Release of Information.** Throughout the duration of this Master Agreement, Contractor must secure from the Lead State prior approval for the release of information that pertains to the potential work or activities covered by the Master Agreement. This limitation does not preclude publication about the award of the Master Agreement or marketing activities consistent with any proposed and accepted marketing plan.

**4.10 No Representations.** The Contractor shall not make any representations of NASPO ValuePoint, the Lead State, any Participating Entity, or any Purchasing Entity's opinion or position as to the quality or effectiveness of the services that are the subject of this Master Agreement without prior written consent.

## V. NASPO ValuePoint Provisions

**5.1 Applicability.** NASPO ValuePoint is not a party to the Master Agreement. The terms set forth in **section V** are for the benefit of NASPO ValuePoint as a third-party beneficiary of this Master Agreement.

### 5.2 Administrative Fees

**5.2.1 NASPO ValuePoint Fee.** Contractor shall pay to NASPO ValuePoint, or its assignee, a NASPO ValuePoint Administrative Fee of one-quarter of one percent (0.25% or 0.0025) no later than sixty (60) days following the end of each calendar quarter. The NASPO ValuePoint Administrative Fee must be submitted quarterly and is based on all sales of products and services under the Master Agreement (less any charges for taxes or shipping). The NASPO ValuePoint Administrative Fee is not negotiable. This fee is to be included as part of the pricing submitted with a vendor's response to the Lead State's solicitation.

**5.2.1.1** Contractor will report on all Usage Based Equipment sales, and on Usage Based or Life Cycle Service and Supply sales. This method will no longer require the Contractor to capture the actual Service and Supply revenues that are billed to the customer each month.

**5.2.1.2** Industry research has shown close to a 1:1 ratio between sales price on a piece of Equipment and the actual amount of Service and Supply costs required to operate that Equipment over its Useful Life. Therefore, to simplify the reporting process and remove the burden to capture the actual Service and Supply costs, the Contractor may report as follows:

**5.2.1.2.1 Purchased Equipment:** Contractor shall report the actual amount invoiced (less any taxes) for all Equipment sold under the reporting period (calendar quarter). In addition, the Contractor shall report an additional amount equal to the invoice amount and identified as "Life Cycle Service and Supplies," or an actual amount and identified as "Usage Based Service and Supplies," providing the customer elects to enter into a Maintenance Agreement. Thus, in the Contractor's Detailed Sales Report, for each item sold, there will be two-line items: one for the piece of Equipment, and one for the Life Cycle or Usage Based Service and Supplies. The amount reflected for the Life Cycle Service and Supplies must be equal to the amount of the Equipment.

**5.2.1.2.2 Lease and Rental Equipment:** Contractor may report sales according to the Purchased Equipment methodology described above, or they may report the actual amount invoiced (less any taxes) for the lease or rental during the reporting period (calendar quarter). In addition, the Contractor shall report an additional amount equal to the invoice amount and identified as "Life Cycle Service and Supplies," or an actual amount and

identified as "Usage Based Service and Supplies." Thus, in the Contractor's Detailed Sales Report, for each item leased or rented, there will be two-line items: one for the invoice amount to the customer for the Equipment, and one for the Life Cycle or Usage Based Service and Supplies. The amount reflected for the Life Cycle Service and Supplies must be equal to the amount of the invoiced Equipment.

**5.2.2 State Imposed Fees.** Some states may require an additional fee be paid by Contractor directly to the state on purchases made by Purchasing Entities within that state. For all such requests, the fee rate or amount, payment method, and schedule for such reports and payments will be incorporated into the applicable Participating Addendum. Unless agreed to in writing by the state, Contractor may not adjust the Master Agreement pricing to include the state fee for purchases made by Purchasing Entities within the jurisdiction of the state. No such agreement will affect the NASPO ValuePoint Administrative Fee percentage or the prices paid by Purchasing Entities outside the jurisdiction of the state requesting the additional fee.

## 5.3 NASPO ValuePoint Summary and Detailed Usage Reports

**5.3.1 Sales Data Reporting.** In accordance with this section, Contractor shall report to NASPO ValuePoint all Orders under this Master Agreement for which Contractor has invoiced the ordering entity or individual, including Orders invoiced to Participating Entity or Purchasing Entity employees for personal use if such use is permitted by this Master Agreement and the applicable Participating Addendum ("Sales Data"). Timely and complete reporting of Sales Data is a material requirement of this Master Agreement. Reporting requirements, including those related to the format, contents, frequency, or delivery of reports, may be updated by NASPO ValuePoint with reasonable notice to Contractor and without amendment to this Master Agreement. NASPO ValuePoint shall have exclusive ownership of any media on which reports are submitted and shall have a perpetual, irrevocable, non-exclusive, royalty free, and transferable right to display, modify, copy, and otherwise use reports, data, and information provided under this section.

**5.3.2 Summary Sales Data.** "Summary Sales Data" is Sales Data reported as cumulative totals by state. Contractor shall, using the reporting tool or template provided by NASPO ValuePoint, report Summary Sales Data to NASPO ValuePoint for each calendar quarter no later than thirty (30) days following the end of the quarter. If Contractor has no reportable Sales Data for the quarter, Contractor shall submit a zero-sales report.

**5.3.3 Detailed Sales Data.** "Detailed Sales Data" is Sales Data that includes for each Order all information required by the Solicitation or by NASPO ValuePoint, including customer information, Order information, and line-item details. Contractor shall, using the reporting tool or template provided by NASPO ValuePoint, report Detailed Sales Data to NASPO ValuePoint for each calendar quarter no later than thirty (30) days following the end of the quarter. Detailed Sales Data shall be reported in the format provided in the Solicitation or provided by NASPO ValuePoint. The total sales volume of reported Detailed Sales Data shall be consistent with the total sales volume of reported Summary Sales Data.

**5.3.4 Sales Data Crosswalks.** Upon request by NASPO ValuePoint, Contractor shall provide to NASPO ValuePoint tables of customer and Product information and

specific attributes thereof for the purpose of standardizing and analyzing reported Sales Data ("Crosswalks"). Customer Crosswalks must include a list of existing and potential Purchasing Entities and identify for each the appropriate customer type as defined by NASPO ValuePoint. Product Crosswalks must include Contractor's part number or SKU for each Product in Contractor's catalog and identify for each the appropriate Master Agreement category (and subcategory, if applicable), manufacturer part number, product description, eight-digit UNSPSC Class Level commodity code, and (if applicable) EPEAT value and Energy Star rating. Crosswalk requirements and fields may be updated by NASPO ValuePoint with reasonable notice to Contractor and without amendment to this Master Agreement. Contractor shall work in good faith with NASPO ValuePoint to keep Crosswalks updated as Contractor's customer lists and product catalog change.

**5.3.5 Executive Summary.** Contractor shall, upon request by NASPO ValuePoint, provide NASPO ValuePoint with an executive summary that includes but is not limited to a list of states with an active Participating Addendum, states with which Contractor is in negotiations, and any Participating Addendum roll-out or implementation activities and issues. NASPO ValuePoint and Contractor will determine the format and content of the executive summary.

## 5.4 NASPO ValuePoint Cooperative Program Marketing, Training, and Performance Review

**5.4.1 Staff Education.** Contractor shall work cooperatively with NASPO ValuePoint personnel. Contractor shall present plans to NASPO ValuePoint for the education of Contractor's contract administrator(s) and sales/marketing workforce regarding the Master Agreement contract, including the competitive nature of NASPO ValuePoint procurements, the master agreement and participating addendum process, and the manner in which eligible entities can participate in the Master Agreement.

**5.4.2 Onboarding Plan.** Upon request by NASPO ValuePoint, Contractor shall, as Participating Addendums are executed, provide plans to launch the program for the Participating Entity. Plans will include time frames to launch the agreement and confirmation that the Contractor's website has been updated to properly reflect the scope and terms of the Master Agreement as available to the Participating Entity and eligible Purchasing Entities.

**5.4.3 Annual Contract Performance Review.** Contractor shall participate in an annual contract performance review with the Lead State and NASPO ValuePoint, which may at the discretion of the Lead State be held in person and which may include a discussion of marketing action plans, target strategies, marketing materials, Contractor reporting, and timeliness of payment of administration fees.

**5.4.4 Use of NASPO ValuePoint Logo.** The NASPO ValuePoint logos may not be used by Contractor in sales and marketing until a separate logo use agreement is executed with NASPO ValuePoint.

**5.4.5 Most Favored Customer.** Contractor shall, within thirty (30) days of their effective date, notify the Lead State and NASPO ValuePoint of any contractual most-favored-customer provisions in third-party contracts or agreements that may affect the promotion of this Master Agreement or whose terms provide for adjustments to future rates or pricing based on rates, pricing in, or Orders from this Master Agreement. Upon request of the Lead State or NASPO ValuePoint, Contractor

shall provide a copy of any such provisions.

**5.5 Cancellation.** In consultation with NASPO ValuePoint, the Lead State may, in its discretion, cancel the Master Agreement or not exercise an option to renew, when utilization of Contractor's Master Agreement does not warrant further administration of the Master Agreement. The Lead State may also exercise its right to not renew the Master Agreement if the Contractor fails to record or report revenue for three consecutive quarters, upon 60-calendar day written notice to the Contractor. Cancellation based on nonuse or under-utilization will not occur sooner than [two years] after execution of the Master Agreement. This subsection does not limit the discretionary right of either the Lead State or Contractor to cancel the Master Agreement or terminate for default subject to the terms herein. This subsection also does not limit any right of the Lead State to cancel the Master Agreement under applicable laws.

**5.6 Canadian Participation.** Subject to the approval of Contractor, any Canadian provincial government or provincially funded entity in Alberta, British Columbia, Manitoba, New Brunswick, Newfoundland and Labrador, Nova Scotia, Ontario, Prince Edward Island, Quebec, or Saskatchewan, and territorial government or territorial government funded entity in the Northwest Territories, Nunavut, or Yukon, including municipalities, universities, community colleges, school boards, health authorities, housing authorities, agencies, boards, commissions, and crown corporations, may be eligible to use Contractor's Master Agreement.

**5.7 Additional Agreement with NASPO.** Upon request by NASPO ValuePoint, awarded Contractor shall enter into a direct contractual relationship with NASPO ValuePoint related to Contractor's obligations to NASPO ValuePoint under the terms of the Master Agreement, the terms of which shall be the same or similar (and not less favorable) than the terms set forth in the Master Agreement.

## VI. Pricing, Payment & Leasing

**6.1 Pricing.** The prices contained in this Master Agreement or offered under this Master Agreement represent the not-to-exceed ("celling") price to any Purchasing Entity.

**6.1.1** MSRP/List Price discount percentages must be guaranteed throughout the term of the Master Agreement, including any renewal terms, however; Contractor may increase its discount percentage at any time. The Lead State must be notified of any such discount percentage increase, and provided with a copy of the new Price List(s).

**6.1.2** With the exception of Group C and Sub-Group C1 and C2 Devices, pricing must include all shipping, delivery, and installation costs associated with the Products. Excess installation charges however, may be billable. Refer to **section IV.E.5** of Exhibit A, Statement of Work, for more information.

**6.1.3** Price Lists received after the 1st day of the new quarter may not be approved for up to thirty (30) days following submission. In addition, errors in Contractor Price Lists may delay the approval process further.

**6.1.4** Contractor may update their lease and rental rates once per quarter by providing the Lead State with documentation regarding said rate changes. Updates to lease and rental rates will not be permitted until 8/1/2025.

**6.1.5** Pricing shall remain firm during the first twelve (12) months of the Master Agreement (e.g. 8/1/2024 – 7/31/2025). Contractor may then update their pricing

**once per calendar year**. All requested price increases must be sent to the Lead State and include documentation from Contractor which provides a detailed explanation for the increase. While there will not be any restrictions regarding direct and indirect cost increases, it will be at the Lead State's sole discretion to determine if the requested increase has a direct correlation to the Deliverables being offered under the Master Agreement. Price increases shall be allowed for all Products and all Services, including rate and fee structures on maintenance plans.

**6.1.6** All approved Price Lists will be submitted by the Lead State to NASPO ValuePoint. Contractor shall then update all applicable websites with the new Price Lists after the NASPO ValuePoint website has been updated. Contractor is not permitted to send Price List updates directly to NASPO ValuePoint.

**6.1.7** All inclusive Cost Per Copy (CPC) programs may be offered upon request by the Participating State or Entity, but pricing must not exceed Master Agreement pricing. Contractor must provide the Participating State or Entity with their pricing breakdown which enables the Participating State or Entity to easily compare the pricing in the CPC structure against the pricing in the Master Agreement.

**6.1.8** Contractor may offer state-wide promotional discounts, customer location specific discounts, bulk discounts, or spot discounts. Contractor must notify the Participating State or Entity of special state-wide promotional discounts.

**6.1.9** No retroactive adjustments to prices or rates will be allowed.

**6.2** **Payment.** Unless otherwise agreed upon in a Participating Addendum or Order, Payment after Acceptance will be made within thirty (30) days following the date the entire order is delivered or the date a correct invoice is received, whichever is later. After 45 days the Contractor may assess overdue account charges up to a maximum rate of one percent per month on the outstanding balance, unless a different late payment amount is specified in a Participating Addendum or Order, or otherwise prescribed by applicable law. Payments will be remitted in the manner specified in the Participating Addendum or Order. Payments may be made via a purchasing card with no additional charge.

**6.3** **Leasing or Alternative Financing Methods**. The procurement and other applicable laws of some Purchasing Entities may permit the use of leasing or alternative financing methods for the acquisition of Products under this Master Agreement. **Exhibit A, Statement of Work**, contains Leasing and Rental provisions; however, it shall be at the discretion of each Participating State or Entity to accept these terms, reject these terms, or further negotiate the terms with the Contractor, as long as those negotiations don't fall outside the original scope of the RFP or the Master Agreement.

***For example:*** *The maximum lease or rental term on Group A Devices is 60 months; Contractor is not permitted to offer a lease term in excess of this.*

## VII. Ordering

**7.1** **Order Numbers.** Purchase Order numbers must be clearly shown on all acknowledgments, packing slips, invoices, and on all correspondence.

**7.2** **Quotes.** Purchasing Entities may define entity-specific or project-specific requirements and informally compete the requirement among companies having a Master Agreement on an "as needed" basis. This procedure may also be used when requirements are aggregated or other firm commitments may be made to achieve reductions in pricing. This procedure may be modified in Participating Addenda and adapted to the Purchasing Entity's rules and

policies. The Purchasing Entity may in its sole discretion determine which Master Agreement Contractors should be solicited for a quote. The Purchasing Entity may select the quote that it considers most advantageous, cost, and other factors considered.

**7.3** **Applicable Rules.** Each Purchasing Entity will identify and utilize its own appropriate purchasing procedure and documentation. Contractor is expected to become familiar with the Purchasing Entities' rules, policies, and procedures regarding the ordering of supplies and/or services contemplated by this Master Agreement.

**7.4** **Required Documentation.** Contractor shall not begin work without a valid Purchase Order or other appropriate commitment document under the law of the Purchasing Entity.

**7.5** **Term of Purchase.** Orders may be placed consistent with the terms of this Master Agreement and applicable Participating Addendum during the term of the Master Agreement and Participating Addendum.

**7.5.1** Orders must be placed pursuant to this Master Agreement prior to the termination date thereof, but may have a delivery date or performance period up to 120 days past the then-current termination date of this Master Agreement.

**7.5.2** Notwithstanding the previous, Orders must also comply with the terms of the applicable Participating Addendum, which may further restrict the period during which Orders may be placed or delivered.

**7.5.3** Financial obligations of Purchasing Entities payable after the current applicable fiscal year are contingent upon agency funds for that purpose being appropriated, budgeted, and otherwise made available.

**7.5.4** Notwithstanding the expiration, cancellation or termination of this Master Agreement, Contractor shall perform in accordance with the terms of any Orders then outstanding at the time of such expiration or termination. Contractor shall not honor any Orders placed after the expiration, cancellation, or termination of this Master Agreement, or in any manner inconsistent with this Master Agreement's terms.

**7.5.5** Orders for any separate indefinite quantity, task order, or other form of indefinite delivery order arrangement priced against this Master Agreement may not be placed after the expiration or termination of this Master Agreement, notwithstanding the term of any such indefinite delivery order agreement.

**7.6** **Ordering and Invoicing Specifications.** At the discretion of the Participating State or Entity, all Orders pursuant to this Master Agreement, may contain the following:

**7.6.1** Name of Purchasing Entity;

**7.6.2** The name, phone number, and address of Purchasing Entity representative;

**7.6.3** Order date;

**7.6.4** Description of the Product and/or Service ordered;

**7.6.5** Model number;

**7.6.6** Price;

**7.6.7** The Master Agreement number; and

**7.6.8** Any additional information required by the Participating State or Entity.

**7.7** Contractor shall have the ability to accept procurement credit cards, and will not assess any additional charges or fees for processing payments via this method.

**7.8** At the discretion of the Participating State or Entity, Contractor shall have the ability to provide a centralized billing option.

**7.9** Authorized Dealers shall have the ability to invoice a Purchasing Entity directly, unless otherwise specified by a Participating State or Entity.

**7.10** With the exception of drop-shipped items, Contractor and/or Authorized Dealers shall not issue an invoice until the Purchasing Entity has confirmed Acceptance, per **section IX**.

**7.11** Contractor and/or Authorized Dealers may charge the Purchasing Entity a re-stocking fee for any Products that are not accepted. The amount of the fee shall be the lesser of 10% of the purchase price, or $200.00, unless otherwise specified in a Participating Addendum.

**7.12** Contractor and/or Authorized Dealers may estimate meter reads if a Purchasing Entity fails to submit the required information within the specified time-frame.

**7.13** All software Orders shall reference the Manufacturer's most recent release or version of the Product, unless the Purchasing Entity specifically requests a different version.

**7.14** Contractor, Third-Party leasing companies, and/or Authorized Dealers may bill property tax separately or as otherwise indicated in a Participating Addendum or an Order.

**7.15** Contractor and/or Authorized Dealers shall have a process in place for resolving disputed invoices, including escalation procedures. In addition, Contractor and/or Authorized Dealers shall have a process in place for issuing refunds or credits due to invoicing errors, as well as over-payments and Product returns.

**7.16** Internet-based Portal and Electronic Catalogs. If Contractor provides the ability to place an Order through an internet-based portal or electronic catalog, then Contractor shall maintain all necessary hardware, software, backup-capacity and network connections required to operate that internet-based portal or electronic catalog. In addition, Contractor shall adhere to the following requirements:

**7.16.1** The internet-based portal or electronic catalog shall clearly designate that the Products are part of the NASPO ValuePoint Master Agreement, and shall link to the Participating State or Entity's designated web location;

**7.16.2** All Environmentally Preferable Products (EPP) shall be clearly listed;

**7.16.3** If Contractor's electronic catalog will either be hosted on or accessed through the Participating State's eCommerce system, then Contractor shall comply with all policies, procedures and directions from the Participating State or Entity in relation to hosting its catalog on or making its catalog accessible through that system;

**7.16.4** All information made available through the Participating State or Entity's eCommerce system is accurate and complies with the Master Agreement and the Participating Addendum; and

**7.16.5** Paper catalogs or other digital media catalogs must be supplied to the Participating State or Entity upon request.

**7.17** **Communication.** All communications concerning administration of Orders placed must be furnished solely to the authorized purchasing agent within the Purchasing Entity's purchasing office, or to such other individual identified in writing in the Order.

**7.18** **Substitutions.** If an ordered Product is out-of-stock, Contractor shall notify the Purchasing Entity and request approval before substituting for the out-of-stock item. Contractor's

request to substitute shall explain how the substituted Product compares with the out-of-stock item. Any substitute Product offered must be on the Contractor's Master Agreement Price List.

**7.19 Contract Provisions for Orders Utilizing Federal Funds**. Pursuant to Appendix II to 2 Code of Federal Regulations (CFR) Part 200, Contract Provisions for Non-Federal Entity Contracts Under Federal Awards, Orders funded with federal funds may have additional contractual requirements or certifications that must be satisfied at the time the Order is placed or upon delivery. These federal requirements may be proposed by Participating Entities in Participating Addenda and Purchasing Entities for incorporation in Orders placed under this Master Agreement.

**7.20 Supplemental Documents**. All Attachments to this Master Agreement have been reviewed and negotiated by the Lead State only to the extent that they comply with the terms and conditions of RFP-NP-23-001 as well as this Master Agreement. Participating States and Entities are still advised however, to review each Supplemental Document and negotiate the terms and conditions further with Contractor if necessary. It shall be at the discretion of Contractor and Purchasing Entity to determine which Supplemental Documents are appropriate for each Order type. With the exception of End User License Agreements (EULA's), clickwrap agreements, and any third party software agreements, which have not been reviewed or negotiated by the Lead State, nor are they attached to this Master Agreement, only the Supplemental Documents attached to this Master Agreement are permitted to be used for any Order placed.

## VIII. Shipping and Delivery

**8.1 Shipping Terms.** With the exception of Group C and Sub-Groups C1 and C2 Devices, all Products must be shipped F.O.B. destination, standard freight pre-paid by the Contractor, to the Purchasing Entity's specified location, unless otherwise indicated in a Participating Addendum. Group C and Sub-Groups C1 and C2 shipping charges shall be quoted to the Purchasing Entity prior to Order confirmation.

**8.1.1** Notwithstanding the above, responsibility and liability for loss or damage will remain the Contractor's until final inspection and Acceptance when responsibility will pass to the Purchasing Entity except as to latent defects, fraud, and Contractor's warranty obligations.

**8.2 Available Products**. Devices that are in-stock or otherwise not subject to supply-chain shortages or issues, shall be delivered within thirty (30) calendar days after receipt of Order, unless otherwise specified by the Purchasing Entity.

**8.3 Required Updates**. Contractor shall provide a minimum of semi-monthly updates to the Purchasing Entity regarding the status of all Devices that are, or will be expected to go, on backorder.

**8.4 Software Installation**. Software related to the Device must be installed within five (5) Business Days of the Device installation, or as otherwise stated in an Order.

**8.5 Delivery Days and Receiving Hours.** All deliveries shall be made during Normal Business Hours, which may vary for each Purchasing Entity of each Participating State. The Purchasing Entity shall not be responsible for any additional charges should the Contractor fail to observe specific delivery days and receiving hours. The delivery days and delivery hours shall be established by each individual Purchasing Entity upon Order placement.

**8.6 Inside Deliveries.** All deliveries, with the exception of drop-shipped or desktop Devices,

shall be made to the interior location specified by the Purchasing Entity. Specific delivery instructions will be noted on the Order. Any damage to the building interior, scratched walls, damage to the freight elevator, etc., will be the responsibility of the Contractor. If damage does occur, it is the responsibility of the Contractor to immediately notify the Purchasing Entity placing the Order.

**8.7** **Packaging.** Products shall be packaged and labeled so as to satisfy all legal and commercial requirements applicable for use by any Purchasing Entity, and shall include, without limitation and if applicable, OSHA material safety data sheets, and shall conform to all statements made on the label. Packages that cannot be clearly identified may be refused and/or returned at no cost to the Purchasing Entity.

## IX. Inspection and Acceptance

**9.1** **Laws and Regulations.** Any and all Products offered and furnished must comply fully with all applicable Federal, State, and local laws and regulations.

**9.2** **Applicability.** Unless otherwise specified in the Participating Addendum, or ordering document, the terms of this **section IX** will apply. This section is not intended to limit rights and remedies under the applicable commercial code.

**9.3** With the exception of drop-shipped Devices, Purchasing Entity shall confirm delivery, installation and Acceptance of all Devices covered by each purchase, lease, or rental Order, by signing a Delivery and Acceptance Certificate (D&A), as referenced in **Exhibit B, Sample D&A Certificate**, which shows Acceptance of the Device(s) and allows Contractor to invoice for the Device(s).

**9.4** Purchasing Entity agrees to sign and return the D&A to Contractor (which, at mutual agreement, may be done electronically) within five (5) Business Days after any Device is installed, or as otherwise stated in a Participating Addendum.

**9.5** Failure to sign the D&A or reject the Device(s) within the foregoing five (5) day period shall be deemed as Acceptance by the Purchasing Entity; however, it does not relieve the Contractor of liability for material (nonconformity that substantially impairs value) defects subsequently revealed when Devices are put to use. Acceptance of such Devices may be revoked in accordance with the provisions of the applicable commercial code, and the Contractor shall be liable for any resulting expense incurred by the Purchasing Entity in relation to the preparation and shipping of Devices(s) rejected and returned, or for which Acceptance is revoked.

**9.6** **Inspection.** All Devices are subject to inspection at reasonable times and places before Acceptance. Contractor shall provide right of access to the Lead State, or to any other authorized agent or official of the Lead State or other Participating or Purchasing Entity, at reasonable times, to monitor and evaluate performance, compliance, and/or quality assurance requirements under this Master Agreement.

**9.6.1** Devices that do not meet specifications may be rejected. Failure to reject upon receipt, however, does not relieve the contractor of liability for material (nonconformity that substantial impairs value) latent or hidden defects subsequently revealed when goods are put to use.

**9.6.2** Acceptance of such goods may be revoked in accordance with the provisions of the applicable commercial code, and the Contractor is liable for any resulting expense incurred by the Purchasing Entity related to the preparation and shipping of Device

rejected and returned, or for which Acceptance is revoked.

**9.7** **Failure to Conform.** If any Services do not conform to contract requirements, the Purchasing Entity may require the Contractor to perform the Services again in conformity with contract requirements, at no increase in Order amount. When defects cannot be corrected by re-performance, the Purchasing Entity may require the Contractor to take necessary action to ensure that future performance conforms to contract requirements and reduce the contract price to reflect the reduced value of Services performed.

**9.8** **Acceptance Testing.** Purchasing Entity may establish a process, in keeping with industry standards, to ascertain whether the Device meets the standard of performance or specifications prior to Acceptance by the Purchasing Entity.

**9.8.1** The Acceptance Testing period will be thirty (30) calendar days, unless otherwise specified, starting from the day after the Device is delivered or, if installed by Contractor, the day after the Device is installed and Contractor certifies that the Device is ready for Acceptance Testing.

**9.8.2** If the Device does not meet the standard of performance or specifications during the initial period of Acceptance Testing, Purchasing Entity may, at its discretion, continue Acceptance Testing on a day-to-day basis until the standard of performance is met.

**9.8.3** Upon rejection, the Contractor will have fifteen (15) calendar days to cure. If after the cure period, the Device still has not met the standard of performance or specifications, the Purchasing Entity may, at its option: (a) declare Contractor to be in breach and terminate the Order; (b) demand replacement Device from Contractor at no additional cost to Purchasing Entity; or, (c) continue the cure period for an additional time period agreed upon by the Purchasing Entity and the Contractor.

**9.8.4** Contractor shall pay all costs related to the preparation and shipping of Device returned pursuant to the section.

**9.8.5** No Device will be deemed Accepted and no charges will be paid until the standard of performance or specification is met.

## X. Warranty

**10.1** **Applicability.** Unless otherwise specified in the Master Agreement, Participating Addendum, or ordering document, the terms of this **section X** will apply.

**10.2** The warranty period shall begin upon Acceptance of the Device, and shall be for a minimum of ninety (90) days for purchase, lease and rental Devices. This warranty shall be extended to all Devices acquired under the Master Agreement, including Remanufactured and/or Refurbished Devices.

**10.3** Devices that are sold under the resulting Master Agreement will come with the standard features as published on the Manufacturers website, and will not deviate from the stated specifications.

**10.4** Devices shall be in good working order, free from any defects in material and workmanship, and fit for the ordinary purposes they are intended to serve.

**10.5** If defects are identified, per mutual agreement of Contractor and the Purchasing Entity, Contractor obligations shall be limited solely to the repair or replacement of Devices proven to be defective upon inspection.

**10.6** Replacement of Devices shall be on a like-for-like basis and shall be at no cost to the Purchasing Entity.

**10.7** Repair of defective parts and/or Devices shall be at no cost to the Purchasing Entity.

**10.8** Upon significant failure of a Device, the warranty period shall commence again for a minimum of ninety (90) days. Significant failure shall be determined by the Participating State.

**10.9** Contractor warranty obligations shall not apply if:

**10.9.1** The Device is installed, wired, modified, altered, or serviced by anyone other than Contractor and/or their Authorized Dealer;

**10.9.2** If a defective or non-authorized Accessory, Supply, software, or part is attached to, or used in the Device; and

**10.9.3** The Device is relocated to any place where Contractor Services are not available.

**10.10** Contractor agrees to perform its Services in a professional manner, consistent with applicable industry standards.

**10.11** It will be at the discretion of each Participating State or Entity to negotiate additional warranty requirements with the Contractor.

**10.12 Lemon Clause**

**10.12.1** This clause shall apply to all Devices that are purchased, leased, or rented under the Contractor's Master Agreement.

**10.12.2** This clause shall not apply if Supplies are used in the Devices that were not manufactured, provided, or authorized by the Contractor.

**10.12.3** The application period is thirty-six (36) months from the date of Acceptance.

**10.12.4** This clause shall take precedence over any other warranty or Services clauses associated with the Contractor's Master Agreement, or as specified by a Participating State or Entity in their Participating Addendum.

**10.12.5** A Purchasing Entity must maintain an uninterrupted Maintenance Agreement on all purchased Devices in order for this clause to apply past the initial ninety (90) day warranty.

**10.12.6** Any Device that fails (except due to operator error) to function in accordance with the Manufacturer's published performance specifications, four (4) times in any four (4) week period and/or is subject to recurring related problems, shall be replaced with a new Device that meets or exceeds the requirements of the original Device, at no cost to the Purchasing Entity.

**10.13 Rights Reserved.** The rights and remedies of the parties under this warranty are in addition to any other rights and remedies of the parties provided by law or equity, including, without limitation, actual damages, and, as applicable and awarded under the law, to a prevailing party, reasonable attorneys' fees and costs.

## XI. Equipment Title

**11.1 Conveyance of Title.** Contractor shall have exclusive title to the Devices being delivered and the Devices shall be free and clear of all liens, encumbrances, and security interests. Title to the Device shall only pass to the Purchasing Entity upon:

**11.1.1** Purchasing Entity up-front purchase of the Device;

**11.1.2** Purchasing Entity exercising the purchase option at the end of an FMV Lease;

**11.1.3** Expiration of a Purchasing Entity's Capital Lease; or

**11.1.4** Purchasing Entity has secured Third Party financing and payment is being made directly to the Contractor by the Purchasing Entity.

**11.2 Embedded Software.** Transfer of title to the Device must include an irrevocable and perpetual license to use any Embedded Software in the Device. If Purchasing Entity subsequently transfers title of the Device to another entity, Purchasing Entity shall have the right to transfer the license to use the Embedded Software with the transfer of Device title. A subsequent transfer of this software license will be at no additional cost or charge to either Purchasing Entity or Purchasing Entity's transferee.

**11.3 License of Pre-Existing Intellectual Property.** Contractor grants to the Purchasing Entity a nonexclusive, perpetual, royalty-free, irrevocable, license to use, publish, translate, reproduce, transfer with any sale of tangible media or Product, perform, display, and dispose of the Intellectual Property, and its derivatives, used or delivered under this Master Agreement, but not created under it ("Pre-existing Intellectual Property"). The Contractor shall be responsible for ensuring that this license is consistent with any third-party rights in the Pre-existing Intellectual Property.

## XII. Indemnification

**12.1 General Indemnification.** The Contractor shall defend, indemnify and hold harmless NASPO, NASPO ValuePoint, the Lead State, Participating Entities, and Purchasing Entities, along with their officers and employees, from and against third-party claims, damages or causes of action including reasonable attorneys' fees and related costs for any death, injury, or damage to tangible property arising from any act, error, or omission of the Contractor, its employees or subcontractors or volunteers, at any tier, relating to performance under this Master Agreement.

**12.2 Intellectual Property Indemnification.** The Contractor shall defend, indemnify and hold harmless NASPO, NASPO ValuePoint, the Lead State, Participating Entities, Purchasing Entities, along with their officers and employees ("Indemnified Party"), from and against claims, damages or causes of action including reasonable attorneys' fees and related costs arising out of the claim that the Product or its use infringes Intellectual Property rights of another person or entity ("Intellectual Property Claim").

**12.2.1** The Contractor's obligations under this section will not extend to any combination of the Product with any other product, system or method, unless the Product, system or method is:

**12.2.1.1** provided by the Contractor or the Contractor's subsidiaries or affiliates;

**12.2.1.2** specified by the Contractor to work with the Product;

**12.2.1.3** reasonably required to use the Product in its intended manner, and the infringement could not have been avoided by substituting another reasonably available product, system or method capable of performing the same function; or

**12.2.1.4** reasonably expected to be used in combination with the Product, system or method.

**12.2.2** The Indemnified Party shall notify the Contractor within a reasonable time after receiving notice of an Intellectual Property Claim. Even if the Indemnified Party fails to provide reasonable notice, the Contractor shall not be relieved from its obligations unless the Contractor can demonstrate that it was prejudiced in defending the Intellectual Property Claim resulting in increased expenses or loss to the Contractor. If the Contractor promptly and reasonably investigates and defends any Intellectual Property Claim, it shall have control over the defense and settlement of the Intellectual Property Claim. However, the Indemnified Party must consent in writing for any money damages or obligations for which it may be responsible.

**12.2.3** The Indemnified Party shall furnish, at the Contractor's reasonable request and expense, information and assistance necessary for such defense. If the Contractor fails to vigorously pursue the defense or settlement of the Intellectual Property Claim, the Indemnified Party may assume the defense or settlement of the Intellectual Property Claim and the Contractor shall be liable for all costs and expenses, including reasonable attorneys' fees and related costs, incurred by the Indemnified Party in the pursuit of the Intellectual Property Claim.

**12.2.4** Unless otherwise set forth herein, **section 12.2** is not subject to any limitations of liability in this Master Agreement or in any other document executed in conjunction with this Master Agreement.

## XIII. Insurance

**13.1** Unless otherwise agreed in a Participating Addendum, Contractor shall, during the term of this Master Agreement, maintain in full force and effect, the insurance described in this section. Contractor shall acquire such insurance from an insurance carrier or carriers licensed to conduct business in each Participating Entity's state and having a rating of A-, Class VII or better, in the most recently published edition of Best's Reports. Failure to buy and maintain the required insurance may result in this Master Agreement's termination or, at a Participating Entity's option; result in termination of its Participating Addendum.

**13.2** Coverage shall be written on an occurrence basis, except for Cyber Liability, which is written on a claims made basis. The minimum acceptable limits shall be as indicated below, with no deductible for each of the following categories:

**13.2.1** **Commercial General Liability** covering premises operations, Products and completed operations, blanket contractual liability, personal injury (including death), advertising liability, and property damage, with a limit of not less than $1 million per occurrence, $2 million general aggregate, $2 million Products and completed operations aggregate and $50,000 and any one fire. If any aggregate limit is reduced below $2,000,000 because of claims made or paid, the Contractor shall immediately obtain additional insurance to restore the full aggregate limit and furnish to the Participating Entity, a certificate or other document satisfactory to the Participating Entity, showing compliance with this provision.

**13.2.2** **Cyber Liability** covering claims and losses with respect to network, internet (Cloud) or other data disclosure risks (such as data breaches, releases of Confidential Information, unauthorized access/use of information, and identity theft) with minimum limits of not less than $1,000,000 per claim and $1,000,000 aggregate.

**13.2.3** Contractor must comply with any applicable State Workers Compensation or Employers Liability Insurance requirements.

**13.2.4** **Automobile Liability** covering any auto (including owned, hired and non-owned), with a minimum limit of $1,000,000 each accident combined single limit.

**13.3** Contractor shall pay premiums on all insurance policies. Such policies shall also reference this Master Agreement and shall have a condition that the insurer not revoke them until thirty (30) calendar days after notice of intended revocation thereof shall have been given to Purchasing Entity and Participating Entity by the Contractor.

**13.4** Prior to commencement of performance, Contractor shall provide to the Lead State a written endorsement to the Contractor's general liability insurance policy or other documentary evidence acceptable to the Lead State that:

**13.4.1** Includes the Participating States identified in the Request for Proposal as additional insured's, and;

**13.4.2** Provides that the Contractor's liability insurance policy shall be primary, with any liability insurance of any Participating State as secondary and noncontributory. Unless otherwise agreed in any Participating Addendum, the Participating Entity's rights and Contractor's obligations are the same as those specified in the first sentence of this subsection. Before performance of any Purchase Order issued after execution of a Participating Addendum authorizing it, the Contractor shall provide to a Purchasing Entity or Participating Entity who requests it the same information described in this subsection.

**13.5** Contractor shall furnish to the Lead State, Participating Entity, and, on request, the Purchasing Entity copies of certificates of all required insurance within seven (7) calendar days of the execution of this Master Agreement, the execution of a Participating Addendum, or the Order's effective date and prior to performing any work. The insurance certificate shall provide the following information: the name and address of the insured; name, address, telephone number and signature of the authorized agent; name of the insurance company (authorized to operate in all states); a description of coverage in detailed standard terminology (including policy period, policy number, limits of liability, exclusions and endorsements); and an acknowledgment of the requirement for notice of cancellation. Copies of renewal certificates of all required insurance shall be furnished within fifteen (15) days after any renewal date. These certificates of insurance must expressly indicate compliance with each insurance requirement specified in this section. Failure to provide evidence of coverage may, at sole option of the Lead State, or any Participating Entity, result in this Master Agreement's termination or the termination of any Participating Addendum.

**13.6** Coverage and limits shall not limit Contractor's liability and obligations under this Master Agreement, any Participating Addendum, or any Order.

**13.7** **Notice of Cancellation.** Contractor shall pay premiums on all insurance policies. Contractor shall provide notice to a Participating Entity who is a state within five (5) business days after Contractor is first aware of expiration, cancellation or nonrenewal of such policy or is first aware that cancellation is threatened or expiration, nonrenewal or expiration otherwise may occur.

**13.8** **Participating Entities.** Contractor shall provide to Participating States and Participating Entities the same insurance obligations and documentation as those specified in **section**

**XIII**, except the endorsement is provided to the applicable Participating State or Participating Entity.

**13.9 Furnishing of Certificates.** Contractor shall furnish to the Lead State copies of certificates of all required insurance in a form sufficient to show required coverage within thirty (30) calendar days of the execution of this Master Agreement and prior to performing any work. Copies of renewal certificates of all required insurance will be furnished within thirty (30) days after any renewal date to the applicable state Participating Entity. Failure to provide evidence of coverage may, at the sole option of the Lead State, or any Participating Entity, result in this Master Agreement's termination or the termination of any Participating Addendum.

**13.10 Disclaimer.** Insurance coverage and limits will not limit Contractor's liability and obligations under this Master Agreement, any Participating Addendum, or any Purchase Order.

## XIV. General Provisions

### 14.1 Records Administration and Audit

**14.1.1** The Contractor shall maintain books, records, documents, and other evidence pertaining to this Master Agreement and Orders placed by Purchasing Entities under it to the extent and in such detail as will adequately reflect performance and administration of payments and fees. Contractor shall permit the Lead State, a Participating Entity, a Purchasing Entity, the federal government (including its grant awarding entities and the U.S. Comptroller General), and any other duly authorized agent of a governmental agency, to audit, inspect, examine, copy and/or transcribe Contractor's books, documents, papers and records directly pertinent to this Master Agreement or orders placed by a Purchasing Entity under it for the purpose of making audits, examinations, excerpts, and transcriptions. This right will survive for a period of six (6) years following termination of this Agreement or final payment for any order placed by a Purchasing Entity against this Master Agreement, whichever is later, or such longer period as is required by the Purchasing Entity's state statutes, to assure compliance with the terms hereof or to evaluate performance hereunder.

**14.1.2** Without limiting any other remedy available to any governmental entity, the Contractor shall reimburse the applicable Lead State, Participating Entity, or Purchasing Entity for any overpayments inconsistent with the terms of the Master Agreement or Orders or underpayment of fees found as a result of the examination of the Contractor's records.

**14.1.3** The rights and obligations herein exist in addition to any quality assurance obligation in the Master Agreement that requires the Contractor to self-audit contract obligations and that permits the Lead State to review compliance with those obligations.

### 14.2 Confidentiality, Non-Disclosure, and Injunctive Relief

**14.2.1 Confidentiality.** Contractor acknowledges that it and its employees or agents may, in the course of providing a Product under this Master Agreement, be exposed to or acquire information that is confidential to Purchasing Entity or Purchasing Entity's clients.

**14.2.1.1** Any and all information of any form that is marked as confidential or would by its nature be deemed confidential obtained by Contractor or

its employees or agents in the performance of this Master Agreement, including but not necessarily limited to (1) any Purchasing Entity's records, (2) personnel records, and (3) information concerning individuals, is confidential information of Purchasing Entity ("Confidential Information").

**14.2.1.2** Any reports or other documents or items (including software) that result from the use of the Confidential Information by Contractor shall be treated in the same manner as the Confidential Information.

**14.2.1.3** Confidential Information does not include information that (1) is or becomes (other than by disclosure by Contractor) publicly known; (2) is furnished by Purchasing Entity to others without restrictions similar to those imposed by this Master Agreement; (3) is rightfully in Contractor's possession without the obligation of nondisclosure prior to the time of its disclosure under this Master Agreement; (4) is obtained from a source other than Purchasing Entity without the obligation of confidentiality, (5) is disclosed with the written consent of Purchasing Entity; or (6) is independently developed by employees, agents or subcontractors of Contractor who can be shown to have had no access to the Confidential Information.

**14.2.2** **Non-Disclosure.** Contractor shall hold Confidential Information in confidence, using at least the industry standard of confidentiality, and shall not copy, reproduce, sell, assign, license, market, transfer or otherwise dispose of, give, or disclose Confidential Information to third parties or use Confidential Information for any purposes whatsoever other than what is necessary to the performance of Orders placed under this Master Agreement.

**14.2.2.1** Contractor shall advise each of its employees and agents of their obligations to keep Confidential Information confidential. Contractor shall use commercially reasonable efforts to assist Purchasing Entity in identifying and preventing any unauthorized use or disclosure of any Confidential Information.

**14.2.2.2** Without limiting the generality of the foregoing, Contractor shall advise Purchasing Entity, applicable Participating Entity, and the Lead State immediately if Contractor learns or has reason to believe that any person who has had access to Confidential Information has violated or intends to violate the terms of this Master Agreement, and Contractor shall at its expense cooperate with Purchasing Entity in seeking injunctive or other equitable relief in the name of Purchasing Entity or Contractor against any such person.

**14.2.2.3** Except as directed by Purchasing Entity, Contractor will not at any time during or after the term of this Master Agreement disclose, directly or indirectly, any Confidential Information to any person, except in accordance with this Master Agreement, and that upon termination of this Master Agreement or at Purchasing Entity's request, Contractor shall turn over to Purchasing Entity all documents, papers, and other matter in Contractor's possession that embody Confidential Information.

**14.2.2.4** Notwithstanding the foregoing, Contractor may keep one copy of such

Confidential Information necessary for quality assurance, audits, and evidence of the performance of this Master Agreement.

**14.2.3** **Injunctive Relief.** Contractor acknowledges that Contractor's breach of **section 14.2** would cause irreparable injury to the Purchasing Entity that cannot be adequately compensated in monetary damages. Accordingly, Purchasing Entity may seek and obtain injunctive relief against the breach or threatened breach of the foregoing undertakings, in addition to any other legal remedies that may be available. Contractor acknowledges and agrees that the covenants contained herein are necessary for the protection of the legitimate business interests of Purchasing Entity and are reasonable in scope and content.

**14.2.4** **Purchasing Entity Law.** These provisions will be applicable only to extent they are not in conflict with the applicable public disclosure laws of any Purchasing Entity.

**14.2.5** **NASPO ValuePoint.** The rights granted to Purchasing Entities and Contractor's obligations under this section will also extend to NASPO ValuePoint's Confidential Information, including but not limited to Participating Addenda, Orders or transaction data relating to Orders under this Master Agreement that identify the entity/customer, Order dates, line-item descriptions and volumes, and prices/rates. This provision does not apply to disclosure to the Lead State, a Participating State, or any governmental entity exercising an audit, inspection, or examination pursuant to this Master Agreement. To the extent permitted by law, Contractor shall notify the Lead State of the identity of any entity seeking access to the Confidential Information described in this subsection.

**14.2.6** **Public Information.** This Master Agreement and all related documents are subject to disclosure pursuant to the Lead State's public information laws.

**14.3 Assignment/Subcontracts**

**14.3.1** Contractor shall not assign, sell, transfer, subcontract or sublet rights, or delegate responsibilities under this Master Agreement, in whole or in part, without the prior written approval of the Lead State.

**14.3.2** The Lead State reserves the right to assign any rights or duties, including written assignment of contract administration duties, to NASPO ValuePoint and other third parties.

**14.4** **Changes in Contractor Representation.** The Contractor must, within ten (10) calendar days, notify the Lead State in writing of any changes in the Contractor's key administrative personnel managing the Master Agreement. The Lead State reserves the right to approve or reject changes in key personnel, as identified in the Contractor's proposal. The Contractor shall propose replacement key personnel having substantially equal or better education, training, and experience as was possessed by the key person proposed and evaluated in the Contractor's proposal.

**14.5** **Independent Contractor.** Contractor is an independent contractor. Contractor has no authorization, express or implied, to bind the Lead State, Participating States, other Participating Entities, or Purchasing Entities to any agreements, settlements, liability or understanding whatsoever, and shall not to hold itself out as agent except as expressly set forth herein or as expressly set forth in an applicable Participating Addendum or Order.

**14.6** **Cancellation.** Unless otherwise set forth herein, this Master Agreement may be canceled

by either party upon sixty (60) days' written notice prior to the effective date of the cancellation. Further, any Participating Entity may cancel its participation upon thirty (30) days' written notice, unless otherwise limited or stated in the Participating Addendum. Cancellation may be in whole or in part. Any cancellation under this provision will not affect the rights and obligations attending Orders outstanding at the time of cancellation, including any right of a Purchasing Entity to indemnification by the Contractor, rights of payment for Products delivered and accepted, rights attending any warranty or default in performance in association with any Order, and requirements for records administration and audit. Cancellation of the Master Agreement due to Contractor default may be immediate.

**14.7 Force Majeure.** Neither party to this Master Agreement shall be held responsible for delay or default caused by fire, riot, unusually severe weather, other acts of God, acts of war which are beyond that party's reasonable control, pandemics, or epidemics that would negatively impact supply chain distribution. The Lead State may terminate this Master Agreement upon determining such delay or default will reasonably prevent successful performance of the Master Agreement. This clause does not absolve Purchasing Entity of their payment obligations for goods or services received. Past due account charges will not accrue until the conclusion of the Force Majeure event, at which point Contractor shall also be expected to resume their Service obligations.

**14.8 Defaults and Remedies**

**14.8.1** The occurrence of any of the following events will be an event of default under this Master Agreement:

**14.8.1.1** Nonperformance of contractual requirements;

**14.8.1.2** A material breach of any term or condition of this Master Agreement;

**14.8.1.3** Any certification, representation or warranty by Contractor in response to the solicitation or in this Master Agreement that proves to be untrue or materially misleading;

**14.8.1.4** Institution of proceedings under any bankruptcy, insolvency, reorganization or similar law, by or against Contractor, or the appointment of a receiver or similar officer for Contractor or any of its property, which is not vacated or fully stayed within thirty (30) calendar days after the institution or occurrence thereof; or

**14.8.1.5** Any default specified in another section of this Master Agreement.

**14.8.2** Upon the occurrence of an event of default, the Lead State shall issue a written notice of default, identifying the nature of the default, and providing a period of fifteen (15) calendar days in which Contractor shall have an opportunity to cure the default. The Lead State shall not be required to provide advance written notice or a cure period and may immediately terminate this Master Agreement in whole or in part if the Lead State, in its sole discretion, determines that it is reasonably necessary to preserve public safety or prevent immediate public crisis. Time allowed for cure will not diminish or eliminate Contractor's liability for damages, including liquidated damages to the extent provided for under this Master Agreement.

**14.8.3** If Contractor is afforded an opportunity to cure and fails to cure the default within the period specified in the written notice of default, Contractor shall be in breach of its obligations under this Master Agreement and the Lead State shall have the

right to exercise any or all of the following remedies:

**14.8.3.1** Any remedy provided by law;

**14.8.3.2** Termination of this Master Agreement and any related Contracts or portions thereof;

**14.8.3.3** Assessment of liquidated damages as provided in this Master Agreement;

**14.8.3.4** Suspension of Contractor from being able to respond to future bid solicitations; and

**14.8.3.5** Suspension of Contractor's performance.

**14.8.4** Unless otherwise specified in the Participating Addendum, in the event of a default under a Participating Addendum, a Participating Entity shall provide a written notice of default as described in this section and shall have all of the rights and remedies under this paragraph regarding its participation in the Master Agreement, in addition to those set forth in its Participating Addendum. Unless otherwise specified in an Order, a Purchasing Entity shall provide written notice of default as described in this section and have all of the rights and remedies under this paragraph and any applicable Participating Addendum with respect to an Order placed by the Purchasing Entity. Nothing in these Master Agreement Terms and Conditions will be construed to limit the rights and remedies available to a Purchasing Entity under the applicable commercial code.

**14.9 Waiver of Breach.** Failure of the Lead State, Participating Entity, or Purchasing Entity to declare a default or enforce any rights and remedies will not operate as a waiver under this Master Agreement, any Participating Addendum, or any Purchase Order. Any waiver by the Lead State, Participating Entity, or Purchasing Entity must be in writing. Waiver by the Lead State or Participating Entity of any default, right or remedy under this Master Agreement or Participating Addendum, or by Purchasing Entity with respect to any Purchase Order, or breach of any terms or requirements of this Master Agreement, a Participating Addendum, or Purchase Order will not be construed or operate as a waiver of any subsequent default or breach of such term or requirement, or of any other term or requirement under this Master Agreement, any Participating Addendum, or any Purchase Order.

**14.10 Debarment.** The Contractor certifies that neither it nor its principals are presently debarred, suspended, proposed for debarment, declared ineligible, or voluntarily excluded from participation in public procurement or contracting by any governmental department or agency. This certification represents a recurring certification made at the time any Order is placed under this Master Agreement. If the Contractor cannot certify this statement, attach a written explanation for review by the Lead State.

**14.11 No Waiver of Sovereign Immunity**

**14.11.1** In no event will this Master Agreement, any Participating Addendum or any contract or any Purchase Order issued thereunder, or any act of the Lead State, a Participating Entity, or a Purchasing Entity be a waiver of any form of defense or immunity, whether sovereign immunity, governmental immunity, immunity based on the Eleventh Amendment to the Constitution of the United States or otherwise, from any claim or from the jurisdiction of any court.

**14.11.2** This section applies to a claim brought against the Participating Entities who are

states only to the extent Congress has appropriately abrogated the state's sovereign immunity and is not consent by the state to be sued in federal court. This section is also not a waiver by the state of any form of immunity, including but not limited to sovereign immunity and immunity based on the Eleventh Amendment to the Constitution of the United States.

**14.12 Governing Law and Venue**

**14.12.1** The laws of the Lead State shall govern the construction and effect of this Master Agreement. Venue for any administrative or judicial action relating to this Master Agreement shall be in the City and County of Denver, Colorado.

**14.12.2** The construction and effect of any Participating Addendum or Order against this Master Agreement shall be governed by and construed in accordance with the laws of the Participating Entity's or Purchasing Entity's State.

**14.12.3** If a claim is brought in a federal forum, then it must be brought and adjudicated solely and exclusively within the United States District Court for (in decreasing order of priority): The Lead State for claims relating to the procurement, evaluation, award, or Contract performance or administration if the Lead State is a party; the Participating State if a named party; the Participating Entity state if a named party; or the Purchasing Entity state if a named party.

**14.13 Assignment of Antitrust Rights.** Contractor irrevocably assigns to a Participating Entity who is a state any claim for relief or cause of action which the Contractor now has or which may accrue to the Contractor in the future by reason of any violation of state or federal antitrust laws (15 U.S.C. § 1-15 or a Participating Entity's state antitrust provisions), as now in effect and as may be amended from time to time, in connection with any goods or services provided in that state for the purpose of carrying out the Contractor's obligations under this Master Agreement or Participating Addendum, including, at the Participating Entity's option, the right to control any such litigation on such claim for relief or cause of action.

**14.14 Survivability.** Unless otherwise explicitly set forth in a Participating Addendum or Order, the terms of this Master Agreement as they apply to the Contractor, Participating Entities, and Purchasing Entities, including but not limited to pricing and the reporting of sales and payment of administrative fees to NASPO ValuePoint, shall survive expiration of this Master Agreement and shall continue to apply to all Participating Addenda and Orders until the expiration thereof.

# SIGNATURE PAGE

## THE PARTIES HERETO HAVE EXECUTED THIS MASTER AGREEMENT

*** Individual signing for Contractor hereby swears and affirms that they are authorized to act on Contractor's behalf and acknowledge that the Lead State is relying on their representations to that effect.**

| CONTRACTOR<br>Sharp Electronics Corporation | STATE OF COLORADO<br>Jared S. Polis, Governor<br>Department of Personnel & Administration<br>State Purchasing & Contracts Office<br>Tony Gherardini, Executive Director |
|---|---|
| By: Mike Marusic<br>Title: President & CEO<br><br>By: DocuSigned by: Mike Marusic 57C1C7F6CAF04F4...<br>*Signature<br><br>Date: 1/11/2024 | By: DocuSigned by: John Chapman EF45AFDEB51E414...<br>John Chapman, State Purchasing Manager<br><br>Date: 1/11/2024 |

## ALL CONTRACTS REQUIRE APPROVAL BY THE STATE CONTROLLER

**CRS §24-30-202 requires the State Controller to approve all State Contracts. This Master Agreement is not valid until signed and dated below by the State Controller or delegate. Contractor is not authorized to begin performance until such time. If Contractor begins performing prior thereto, the State of Colorado is not obligated to pay Contractor for such performance or for any Goods and/or Services provided hereunder.**

**STATE CONTROLLER**
**Robert Jaros, CPA, MBA, JD**

By: DocuSigned by: Nathan Manley 868506096CC1A43A...

Date: 1/11/2024

# EXHIBIT A – STATEMENT OF WORK

## I. Product Overview

**A.** Contractor is authorized to provide Products and Services in the following Groups and Sub-Groups:

### 1. Primary Products and Services:

| Group | Products and Services |
|---|---|
| **A** | A3 MFD – *OEM only* |
| **B** | A4 MFD – *OEM and Non-OEM* |
| **D** | Single-function Printers – *OEM and Non-OEM* |
| **F** | Scanners – *OEM and Non-OEM* |
| **G** | Software – *OEM and Non-OEM* |
| **H** | Supplies (consumable) – *OEM and Non-OEM* |
| **I** | Managed Print Services |

### 2. Ancillary Products and Services:

| Sub-Group | Products and Services |
|---|---|
| **G1** | Software Related Services |
| **D1** | Specialty Printers (3D, receipt, barcode label, card, cable) – *OEM and Non-OEM* |

**B.** Contractor may not provide Products that have not been approved by the Lead State, with the exception of NSP items, as referenced in **section II.B.3**.

**C.** Contractor may only offer Devices that meet the minimum requirements as outlined in **section II.A.**

**D.** Any Products added to the Master Agreement throughout the term of the Contract must be discounted according to the proposed discount for the appropriate Segment or as specified in **section II.A.4.**

**E.** Contractor may provide MPS under any Group they offer under this Contract. However, MPS may <u>not</u> be provided on any Devices that are being leased or rented to a Purchasing Entity by another Manufacturer, unless Contractor has a written agreement with the Manufacturer to do so. Further, Contractor is not permitted to provide (e.g. sell, lease, rent) Devices under any Group they have NOT been awarded.

**F.** Contractor may add, remove or modify Products and Services on their Price Lists **<u>once per calendar month</u>**, beginning in September 2024. Modifications do NOT include price increases. Refer to **section 6.1 of the Master Agreement Terms and Conditions** for information regarding pricing.

**G.** Any Device additions must be updated with Buyer's Lab within ninety (90) days of submission to the Lead State. Failure to adhere to this requirement will result in the Device(s) being removed from the Master Agreement Price List(s) until such time they can be verified on Buyer's Lab. In addition, if a Device is acquired by a Purchasing Entity that is not listed on Buyer's Lab within 90 days of it being added to the Price List, then Contractor shall remove the Device from the Purchasing Entity location and substitute it with a Device of equal or greater value, at no charge to the Purchasing Entity. This substituted Device must be on the Price List, AND listed on Buyer's Lab.

## II. Master Agreement Deliverables

### A. Primary Product and Service Offerings

1. **Group Categories.** Segments shall be utilized to distinguish the various speeds of the Devices within Groups. The speeds are denoted in Page per Minute (PPM). The Segments for each Group are as follows:

| Group A – MFD, A3 | |
|---|---|
| **Segment** | **PPM** |
| 2 | 20 – 30 |
| 3 | 31 – 40 |
| 4 | 41 – 50 |
| 5 | 51 – 60 |
| 6 | 61 – 70 |
| 7 | 71 – 90 |

| Group B – MFD, A4 | |
|---|---|
| **Segment** | **PPM** |
| 1 | Up to 20 |
| 2 | 21 - 30 |
| 3 | 31 - 40 |
| 4 | 41 - 50 |
| 5 | 51 - 60 |
| 6 | 61+ |

| Group D – Single-function Printers | |
|---|---|
| **Segment** | **PPM** |
| 1 | Up to 20 |
| 2 | 21 – 40 |
| 3 | 41 – 60 |
| 4 | 61+ |

| Group F - Scanners | |
|---|---|
| **Segment** | **PPM** |
| 1 | 10 – 29 |
| 2 | 30 – 49 |
| 3 | 50 – 69 |
| 4 | 70 – 89 |

| | |
|---|---|
| 5 | 90 – 110 |
| 6 | 111 – 130 |
| 7 | 131+ |

2. **Device Configurations.** Devices must be equipped, at a minimum, with the following Accessories/capabilities:

**2.1 Group A – MFD, A3**

**a.** New power filter;

**b.** Duplex for Segment 3 and above;

**c.** Standard paper drawer(s) equal to or greater than:

**i)** One (1) paper supply for Segment 2;

**ii)** Two (2) paper drawers for Segments 3 and 4; and/or

**iii)** 2,000 sheet paper capacity for Segments 5 and above.

**iv)** Paper size capacity up to 11” x 17”; and

**v)** Bypass paper supply, if applicable for Segment.

**2.2 Group B – MFD, A4**

**a.** New power filter;

**b.** Bypass paper supply;

**c.** Standard paper drawer(s) equal to or greater than:

**i)** One (1) paper supply for Segments 1 and 2;

**ii)** Two (2) paper drawers for Segments 3 and 4; and/or

**iii)** 1,000 sheet capacity for Segments 5 and above.

**d.** Paper size capacity up to 8 1/2” x 14”; and

**e.** Envelope adjustment capability.

**2.3 Group D – Single-function Printers**

**a.** Must include an inkjet, light emitting diode (LED), or laser print engine;

**b.** Standard paper drawer(s);

**c.** Standard paper capacity; and

**d.** Network connectivity.

**2.4 Group F – Scanners**

**a.** Charge-Coupled Device (CCD) or Contact Image Sensor (CIS);

**b.** Automatic Document Feeder (ADF);

**c.** Letter or legal paper size capacity;

**d.** Color depth of at least 24 bytes; and

**e.** Single pass duplex scan.

**3. Device Standards.** Devices must meet the following requirements:

**3.1** Group A Base Units are OEM only.

**3.2** Group A and Group B must be EPEAT registered to a minimum of Bronze Standard within one (1) year of being added to the Master Agreement Price List.

**3.3** Group D must be Energy Star compliant or EPEAT registered to a minimum of Bronze Standard within one (1) year of being added to the Master Agreement Price List.

**3.4** If Contractor Devices fail to meet the EPEAT Bronze Standard, or be Energy Star compliant (applicable to Group D Devices only) within one (1) year, then they will be removed from the Price List. If said Devices have already been placed at a Purchasing Entity's location, then Contractor must replace the Devices with a comparable, qualified model, at no cost to the Purchasing Entity.

**3.5** All Devices must be Newly Manufactured, current, Remanufactured, or Refurbished, except as specified in a Participating Addendum. Discontinued Devices are not permitted to be offered under the Master Agreement.

**3.6** Devices, when installed, and if available, must be set-up to receive automatic software updates and patches.

**3.7** Device specifications must be published on the Contractor website.

**3.8** MSRP must not exceed what is listed with Buyers Laboratory Inc., or List Price must not exceed what is published on the Manufacturer's website.

**3.9** Devices must maintain a PPM speed, according to Segment classification.

**3.10** Devices must be compatible with using recycled paper, up to and including, 100% Post-Consumer Waste (PCW) paper. Contractor may not fault the use of recycled paper for Device failures, as long as the recycled paper in use meets the standard paper specifications (e.g., multi-purpose, copy, or laser paper).

**4. Device Exceptions**

**4.1** Group B, Group D, Sub-Group D1, and Group F will not be restricted to OEM, and do not have to be Private Labeled.

**4.2** Group F is not required to be EPEAT registered or Energy Star compliant.

**4.3** Digital Duplicators may be offered by Contractor under Group A, and must be priced based on the minimum discount offered in the Segment to which they most closely relate.

**5. Accessories**

**5.1** Contractor shall provide OEM and/or Third Party compatible Accessories that compliment or enhance the features of the Device.

**5.2** Contractor may also maintain a separate price list for Accessories for Base Units that have been discontinued. The pricing must be based on the same discount offered, per the 'Discount from MSRP' tab, on the applicable Group Price List.

**5.3** Purchasing Entities may add Accessories to Devices that have been purchased, leased or rented under prior NASPO ValuePoint Master Agreements, as well as via any other means. If the Device is currently being leased or rented, Purchasing Entity must obtain Contractor approval to add Accessories. Purchasing Entities shall also be advised that obtaining Accessories from a Third Party and not the Contractor or their Dealer may void certain warranty or maintenance agreement provisions.

## 6. Remanufactured and Refurbished Equipment

**6.1** Contractor may offer Remanufactured and/or Refurbished Equipment under any Group.

**6.2** Remanufactured and Refurbished Equipment is not required to be EPEAT registered or Energy Star compliant.

**6.3** Equipment can be acquired via a purchase, lease or rental agreement.

**6.4** Contractor must notify the Purchasing Entity in writing, when Remanufactured or Refurbished Equipment is being offered.

**6.5** All Remanufactured or Refurbished Equipment must be clearly labeled as such, and must be certified by the Manufacturer.

**6.6** Remanufactured Equipment must be priced according to the minimum discount offered for similar Equipment in the same Group and Segment of the resulting Master Agreement.

**6.7** Refurbished Equipment shall be offered at a minimum discount of 10% less than the lowest priced Device of the Group and Segment to which the Refurbished Equipment belongs.

**6.8** Service and Supplies for Remanufactured and Refurbished Equipment will receive the same pricing as the Published Price for the Group and Segment to which it belongs.

## 7. Group G - Software

**7.1** May be provided by Contractor to enhance the capabilities of the Devices, or may be provided as a standalone option on any owned, leased or rented Device.

**7.2** Software pricing for unique designs or complex configurations will be quoted on a case by case basis.

**7.3** Contractor may provide OEM and/or Third Party software.

**7.4** All software drivers shall be, at a minimum, Windows 10 compliant, and all Devices must have universal software drivers.

**7.5** Purchasing Entities that acquire software shall be subject to the license agreements distributed with such software, provided such terms do not contradict the language in the Master Agreement, and unless otherwise stated in a Participating Addendum.

### 7.6 Software Subscriptions

**a.** Software pricing shall be inclusive of available software patches and any updates.

**b.** Purchasing Entities shall have the option to finance software subscriptions by utilizing the proposed lease and rental rates.

**c.** Any new releases of software versions (upgrades) shall be chargeable to the Purchasing Entity; however, Contractor may not charge for the installation of the software upgrade, unless installation is excessive, and charges are agreed to by Purchasing Entity.

**d.** License fees and support fees shall remain firm throughout the term of the agreement.

**e.** Software subscriptions shall not be subject to automatic renewals, unless otherwise agreed to in an Order.

**f.** Contractor shall be responsible for communicating all updates, patches, and new releases/versions to Purchasing Entities.

**g.** Contractor shall provide a web-based or toll-free hotline during Normal Business Hours for Purchasing Entities to report software problems or answer software related questions.

## 8. Group H – Supplies (consumable)

**8.1** Contractor may offer OEM or compatible consumable Supplies for Groups A, B, D and F, as well as Sub-Group D1. These Supplies may be purchased as standalone items or included as part of a Maintenance Agreement. Under no circumstances may the Supplies, regardless of quantity, be financed, unless they are start-up Supplies. All compatible Supplies must meet OEM standards for performance and quality. The Supplies that may be offered are:

**a.** Toner;

**b.** Staples;

**c.** Ink;

**d.** Print Cartridges;

**e.** Imaging Drums;

**f.** Fuser Kits;

**g.** Cleaning Kits;

**h.** Transfer Kits;

**i.** Waste Toner Bottles;

**j.** Fuser Oil;

**k.** Ozone Filters;

**l.** Ribbon;

**m.** Developer;

**n.** Rollers and Pads; and

**o.** Maintenance Kits.

**8.2** Toner must be free of carcinogenic, mutagenic, or teratogenic substances, and should avoid petroleum inks and inks with high volatile compounds. Toner cartridges should also be remanufactured, contain recycled content, **or** be bio-based.

**8.3** Contractor shall provide the Purchasing Entity with a method to return the empty toner cartridges at no additional charge.

## 9. Service Offerings

### 9.1 Group I - Managed Print Services

**a.** The main components of an MPS engagement are needs assessment, selective or general replacement of Devices, and the Service, parts and Supplies needed to operate the new and/or existing Devices, including existing Third Party Devices as owned by the Purchasing Entity. The Contractor tracks how the Device fleet is being used, the problems associated with that use, and customer satisfaction in regards to meeting statement of work objectives.

**b.** In addition to the ongoing monitoring and management of a fleet of Devices, Contractor must also offer project implementation Services, and customer help-desk support and training.

**c.** Contractor may also offer hourly Services for consulting purposes, project management, change management plans, and other staffed Services which meet customer needs such as to operate copy centers or complete back file scanning projects.

**d.** MPS may also include enterprise content management Services and workflow optimization components, such as scanning and document capture solutions, developing custom applications for smart MFDs that automate paper-intensive document workflows and route scanned pages to document management systems. It can also be extended to include the restructuring of document workflows. Some MPS engagements may be designed to improve document security or to reduce print volumes and power consumption for environmental reasons.

**e.** All MPS engagements shall require the Contractor and Purchasing Entity to complete a detailed statement of work, similar to the format referenced in **Attachment 3, Sharp Sample MPS Statement of Work**, and it must be approved by both parties prior to the initiation of any engagement.

**f.** Any MPS engagement shall include the following:

**i)** **Free Initial Assessment** (includes, but is not limited to: document workflow; identification of Service, Supplies, and parts; current output; total cost of ownership; employee to Device ratio; preliminary estimated cost savings);

ii) **Implementation** (e.g. plan development; hardware and software installation and set-up);

iii) **Remote Device Monitoring** (e.g. job accounting; automated meter reads; automated toner replenishment);

iv) **End-user Support** (e.g. training; Help Desk); and

v) **Account management** (e.g. reporting; invoicing; customer business reviews).

**g.** The MPS engagement may include, but is not limited to, the following:

i) **Professional Services** (e.g. consulting; project management; record management; network and data security; document workflow consulting; document scanning; back-file conversion; mail-room Services);

ii) **Cost-based Assessment** (e.g. asset mapping; end-user survey; detailed recommendation; analysis and plan design);

iii) **Change Management;**

iv) **Maintenance** (e.g. Preventative Maintenance; Service and repair; on-site break/fix; parts management; warranty management);

v) **Ongoing Fleet Management and Optimization** (e.g. consumable spend; continual assessments; green initiatives; add/move/change Services; disaster recovery).

vi) **Software and Cloud Solutions** (e.g. mobile print, pull-print, enterprise content management; automated workflow; capture and route; security); and

vii) **Cartridge Recycling**.

**h.** The free initial assessment shall not constitute a commitment on behalf of the Purchasing Entity. Upon request from a Purchasing Entity, Contractor must provide the assessment with the understanding that the Purchasing Entity is under no obligation to enter into an MPS engagement.

**i.** MPS pricing and billing options shall be flexible and the Purchasing Entity will drive the complexity of the solution required with a staged approach to implementation.

**9.2 Maintenance Agreements.** No Maintenance Agreement shall be subject to automatic renewals.

**a. Pricing**

i) Pricing <u>must</u> include a zero base, cost per click rate for b&w and/or color for Groups A, B, and D.

ii) Pricing for a monthly base charge, a set copy allowance and an overage rate for b&w and/or color <u>may</u> also be provided.

iii) Pricing for a monthly base charge, a set copy allowance, an overage rate for b&w and/or color, and Supplies <u>may</u> also be provided.

**iv)** Flat Rate Fee pricing must be provided that includes all parts, labor, Preventative Maintenance, and Service Calls for Groups A, B, and D. Supplies may or may not be included.

**v)** Pricing for ALL Groups may also be provided that includes all parts, labor, Preventative Maintenance (if applicable), and Service Calls, but excludes Supplies.

**vi)** Contractor may increase their Service and Supply pricing to include staples (if applicable to the Device).

**vii)** Contractor may provide a flat rate fee without staples, and a flat rate fee with staples. All flat rate fees shall allow for an annual increase of up to 5%.

**viii)** Contractor may charge flat rate fees for Services performed on any Accessories.

**ix)** Service Calls due to misuse, neglect or abuse shall not be covered by the Maintenance Agreement, and Contractor and Authorized Dealers may bill the Purchasing Entity at an hourly rate for Services rendered.

**x)** 11”x17” impressions may be counted as one (1) click or two (2) clicks on Group A Devices.

**xi)** A two-sided document shall be counted as two (2) clicks.

**xii)** Contractor must not charge for scans on any MFD.

**b. Initial Term**

**i)** Pricing shall remain firm for the initial term of the Maintenance Agreement (e.g. 12, 24, 36 months etc.). Upon renewal of the Maintenance Agreement, Contractor may adjust the pricing, as long as the pricing does not exceed Master Agreement rates.

**ii)** For lease and rental Devices, the total Maintenance Agreement term shall be equal to the term of the lease or rental (e.g. 24, 36, 48 months etc.).

**iii)** For purchased Devices, the initial term is determined by the Purchasing Entity, as long as it does not exceed 60 months.

**c. Renewal Term**

If a Purchasing Entity wishes to renew a Maintenance Agreement for Devices that were acquired under prior Master Agreement (RFP-NP-18-001) or Master Agreement (3091), then **section II.A (9.2)(h)** shall apply.

**d. Blended Rates**

**i)** Contractor must have the ability to blend the Service and Supply costs over a large Device fleet, and the Blended Rate must cover all units in the fleet.

**ii)** The Blended Rate must be divided between b&w and color.

**iii)** Contractor shall provide the Purchasing Entity with the Blended Rate

calculation prior to Order placement.

**iv)** Utilizing a Blended Rate shall be at the discretion of the Participating State or Entity, and/or the Purchasing Entity.

**e. Manual Meter Reads**

**i)** Contractor must have an electronic method for collecting meter reads from a Purchasing Entity.

**ii)** Meter reads may be submitted via the Contractor's online portal, or through email, or facsimile.

**iii)** A Participating State or Entity may also elect, at their discretion, to submit meter reads through the Device.

**f. Customer Owned Devices**

**i)** Purchasing Entities may elect to enter into a Maintenance Agreement for Devices they already own, or Devices they acquire through an up-front purchase.

**ii)** The Maintenance Agreement may be priced on a flat rate fee, which shall include parts, labor, Preventative Maintenance (if applicable) and Service calls. Supplies may or may not be included.

**g. Lease or Rental Devices**

**i)** Contractor shall be required to provide a Maintenance Agreement on all Devices that are leased or rented by a Purchasing Entity.

**ii)** The Maintenance Agreement shall be priced based on a cost per click rate, or a monthly base charge.

**h. Legacy Devices**

**i)** Upon request from the Purchasing Entity, Contractor may provide a Maintenance Agreement on any Device that is owned or was leased or rented through Master Agreement (RFP-NP-18-001), Master Agreement (3091), or via any other means, providing the following conditions are met:

**1)** The Device has not reached the end of its Useful Life;

**2)** The maximum term of the Maintenance Agreement does not exceed the Useful Life of the Device, unless otherwise specified in a Participating Addendum; and

**3)** The Maintenance Agreement adheres to the same requirements as outlined in **sections II.A (9.2)(f)** and **II.A (9.2)(g)**.

**ii)** Devices that were previously serviced by another Dealer or Manufacturer must be inspected and repaired, if necessary. Upon mutual agreement, Contractor may charge Purchasing Entity for any parts and/or labor required to bring the Device up to acceptable maintenance levels.

**iii)** If the Device has been at the Purchasing Entity's location for less than

five (5) years, then Maintenance Agreement pricing shall not exceed the new Master Agreement pricing, until the Purchasing Entity reaches the five (5) year mark. Refer to **section II.A (9.2)(h)(iv)** below for additional information.

**iv)** If the Device has been at the Purchasing Entity's location for more than five (5) years, then Maintenance Agreement pricing shall not exceed 120% of the Service and Supply pricing in the new Master Agreement.

**B. Ancillary Product and Service Offerings**

1. **Sub-Group Categories.** The following Products and Services are sub-groups of the Primary Product and Service Offering Groups.

   **1.1 Sub-Group G1 – Software Related Services.** This is a sub-group of Group G – Software. This sub-group shall include, but not be limited to, the following Services:

   **a.** Cloud-based scanning (software as a service, enterprise content management); and

   **b.** Industrial Print solutions (back-file conversion, enterprise content management).

   **1.2 Sub-Group D1 – Specialty Printers.** This is a sub-group of Group D – Single-Function Printers. Products offered under this sub-group are not restricted to OEM, and may include, but not be limited to, the following:

   **a.** Barcode labels;

   **b.** High Volume Inkjet;

   **c.** 3D Printers;

   **d.** Receipt printers;

   **e.** Card printers; and

   **f.** Cable printers.

2. **Sub-Group Category Discounts.** Products in Sub-Group D1 must be discounted at a minimum of 5% for OEM and a minimum of 2% for Non-OEM, unless such discounts would exceed the discount amount offered for OEM and Non-OEM within Group D.

3. **Open Market Items**

   **3.1** Contractor may offer Not Specifically Priced (NSP) items that compliment or enhance the Devices and/or Services offered under the Master Agreement. NSP items will **not** include:

   **a.** Interactive White boards;

   **b.** Computers, monitors, or other related hardware items;

   **c.** Fax machines;

   **d.** Kiosk machines;

   **e.** Overhead Projectors; and

   **f.** Cameras.

**3.2** NSP items may only be acquired through the Contractor or their Authorized Dealer and must be reported quarterly with all other sales under the Master Agreement.

**3.3** NSP items must be priced at a minimum discount of 15% from MSRP or List Price.

**3.4** NSP items may be offered to a Purchasing Entity as a stand-alone option, and the maximum allowable amount of all NSP items in a single Order shall be determined by the Participating State or Entity.

**3.5** It shall be at the discretion of the Participating State or Entity to allow Open Market Items in their Participating Addendum.

**4. Emerging Technologies**

**4.1** Upon approval from the Lead State, Contractor may add new, related technology to the resulting Master Agreement.

**4.2** Technology is not restricted to OEM, nor is it required to be Private Labeled.

**4.3** Any new technology that a Contractor requests to add to their Price List must contain a full description of the Product, the MSRP and pricing information, and an explanation/justification as to how the Product conforms to the requirements of the RFP and Master Agreement.

**4.4** Any new technology must be priced according to the lowest discount offered for any Product under the Master Agreement. No discount or a 0% discount does not qualify as a “lowest” discount.

## III. Purchase, Lease and Rental Programs

**A. Acquisition Methods.** Contractor may offer the following:

| Financial Vehicle | Standard Terms Offered |
|---|---|
| Purchase | N/A |
| Fair Market Value Lease | 12,18, 24, 36, 48 and 60 months |
| Capital Lease | |
| Straight Lease | |
| Cancellable Rental | |
| Short-Term Rental | 12 months |

**1.** All Devices on Contractor’s Price List may be purchased, leased or rented, either as a packaged-deal, or stand-alone item.

**B. Device Trade-In**

**1.** A Purchasing Entity shall have the option, at the Contractors sole discretion, and based upon Participating State or Entity regulations and laws, and Purchasing Entity policies, to do a Device Trade-In, when placing a purchase, lease or rental Order.

**2.** The value for the Device Trade-In shall be negotiated by the Purchasing Entity and the Contractor, and shall not include any disposal or shipping fees.

**C. Lease and Rental Rates**

**1.** Contractor may elect to include property tax in their lease and rental rates, or they may

bill the Purchasing Entity separately for property tax.

**2.** Once a Purchasing Entity enters into a lease or rental agreement, the lease or rental rate must remain fixed throughout the Initial Lease or Rental Term, regardless of whether the Contractor had increased their lease or rental rates in the Master Agreement Price Lists. If Contractor has decreased their lease or rental rates in their Price Lists, then they may extend that lower rate to the Purchasing Entity.

**3.** Device Payments for Renewal Terms must never exceed Master Agreement pricing.

**4.** If a Purchasing Entity enters into a Renewal Term, then the Device Payment will be subject to the lease and rental rates listed in the most recent Price Lists posted on the NASPO ValuePoint website.

**5.** Contractor may update lease and rental rates on a quarterly basis to allow for changes in the financial market. The rates must be indexed against the US Daily Treasury Yield Curve Rates, or a comparable index, and must be the rate in effect at the end of each calendar quarter.

**6.** Lease and rental rates must be proposed as a decimal multiplying factor in such a manner that the purchase price of the Device may be multiplied by the lease or rental rate to arrive at the resulting monthly Device Payment. Proposed rates must include the following information:

**6.1** The Daily Treasury Yield Curve (or comparable index) Rate;

**6.2** The date used for the Daily Treasury Yield Curve (or comparable index) Rate;

**a.** The fixed margin for each lease and rental type being proposed, and how that margin is determined; and

**b.** The methodology for determining the 48 month base rate if a 4-year rate is not published.

**6.3** Contractor must offer Coterminous lease and rental rates to any Purchasing Entity wishing to add Products to an existing lease or rental agreement. The calculation for the Coterminous lease and rental rates must adhere to the following methodology:

***For example**: A customer enters into a 36 month FMV Lease, and 12 months into that lease, they decide to add an Accessory to the Base Unit. The Contractor shall divide the 36 month cumulative Device Payment by 24 months to arrive at the monthly Coterminous payment for that Accessory. That payment will then be added to the existing Device Payment. The new Total Monthly Payment must then be disclosed to the Purchasing Entity.*

## D. Leasing and Rental Overview

**1.** All lease and rental programs shall remain with the Contractor or Authorized Dealer through an in-house leasing program, or through the financial branch or subsidiary of Contractor. In addition, Contractor and their Authorized Dealer may use Third Party leasing companies, however; all Third Party leasing company documents must be reviewed and approved by the Lead State and said documents must be incorporated into the Master Agreement before any Participating State, Participating Entity, or Purchasing

Entity can use them. It will be at the discretion of the Participating State, Participating Entity, or the Purchasing Entity as to whether billing shall be in the name of Contractor, Authorized Dealer or Third Party leasing company. All contractual obligations however, will still be the responsibility of the Contractor.

**2.** A Purchasing Entity may lease or rent Devices pursuant to the terms and conditions in this Master Agreement, and according to the requirements listed in their states' Participating Addendum.

**3.** Lease and rental agreements shall not be subject to automatic renewals. This is non-negotiable in any Particpating Addendum or Order.

**4.** A lease or rental agreement issued prior to the termination of the Master Agreement and Participating Addendum, shall survive the termination of the Master Agreement and the Participating Addendum, and all terms and conditions of the Master Agreement and Participating Addendum shall continue to apply.

**5.** With the exception of a $1 Buyout Lease arrangement, or unless exercising the purchase option on an FMV Lease, a Purchasing Entity shall return the Device at the end of the Initial Lease or Rental Term, or at the end of the Renewal Lease or Rental Term, or the Contractor may pick the Device up, without any further financial obligations to the Purchasing Entity.

**6.** Device pickups must be performed within thirty (30) calendar days of the end of the Initial or Renewal Term.

**7.** Device returns must be performed within thirty (30) calendar days after the Contractor or Authorized Dealer provides return shipping instructions to the Purchasing Entity.

**8.** If Purchasing Entity fails to make Device available for pickup after thirty (30) calendar days, then Contractor or Authorized Dealer may bill the Purchasing Entity, at the total monthly payment amount for such Device, for each month that the Device remains at Purchasing Entity's location. Contractor or Authorized Dealer is not permitted to bill the Purchasing Entity for failure of Contractor or Authorized Dealer to pickup the Device when Purchasing Entity has made it available.

**9.** Contractor and/or Authorized Dealers shall be responsible for all Device pickup and return costs.

**10.** The maximum term on any Initial Lease or Rental Term shall be 60 months.

**11.** The length of a Renewal Term shall be at the discretion of the Participating State or Entity, but at no time shall the Renewal Term exceed the Useful Life of the Device.

**12.** All Renewal Terms shall be billed on a monthly basis.

**13.** If a Purchasing Entity elects to enter into a month to month Renewal Term, they may cancel at anytime, without penalty, by giving Contractor thirty (30) days advance, written notice.

**14.** If a Purchasing Entity elects to enter into a 12-month Renewal Term, the Renewal Term will automatically terminate at the end of the 12-month period, unless the Purchasing

Entity has notified the Contractor that they wish to enter into a new Renewal Term. If a Purchasing Entity wants to cancel their 12-month Renewal Term early, then early termination fees shall apply, and will be equivalent to the remaining stream of Equipment payments only (i.e. less maintenance).

## E. Leasing and Rental Options

### 1. FMV Lease

**1.1** A Purchasing Entity shall have the option to enter into an Initial Lease Term of 12, 18, 24, 36, 48, or 60 months for Group A, Group B, Group D, Sub-Group D1, and Group F, based upon the Contractor's available options, and at the discretion of the Participating State or Entity.

**1.2** Upon the expiration of the Initial Lease Term, a Purchasing Entity may do one of the following:

**a.** Exercise their purchase option;

**b.** Renew the lease on a month to month basis, or a 12 month basis, at the discretion of the Participating State or Entity; or

**c.** Return the Device to the Contractor, or have the Contractor pick the Device up.

### 2. Capital Lease ($1 Buyout Lease)

**2.1** A Purchasing Entity shall have the option to enter into an Initial Lease Term of 12, 18, 24, 36, 48, or 60 months for Group A, Group B, Group D, Sub-Group D1, and Group F, based upon the Contractor's available options, and at the discretion of the Participating State or Entity.

**2.2** Upon the expiration of the Initial Lease Term, the Contractor shall provide title to the Device to the Purchasing Entity, or as otherwise determined in a Participating Addendum or an Order, and the Purchasing Entity shall not be subject to any additional expense in order to assume possession of the Device.

### 3. Straight Lease

**3.1** A Purchasing Entity shall have the option to enter into an Initial Lease Term of 12, 18, 24, 36, 48, or 60 months for Group A, Group B, Group D, Sub-Group D1, and Group F, based upon the Contractor's available options, and at the discretion of the Participating State or Entity.

**3.2** Upon the expiration of the Initial Lease Term, a Purchasing Entity may do one of the following:

**a.** Renew the lease on a month to month basis, or a 12 month basis, at the discretion of the Participating State or Entity; or

**b.** Return the Device to the Contractor, or have the Contractor pick the Device up.

### 4. Cancellable Rental

**4.1** A Purchasing Entity shall have the option to enter into an Initial Lease Term of 12,

18, 24, 36, 48, or 60 months for Group A, Group B, Group D, Sub-Group D1, and Group F, based upon the Contractor's available options, and at the discretion of the Participating State or Entity.

**4.2** A Purchasing Entity shall have the option to cancel the rental at anytime throughout the term of the agreement, by providing the Contractor with a thirty (30) day prior written notice.

**4.3** Upon the expiration of the Initial Lease Term, a Purchasing Entity may do one of the following:

**a.** Renew the lease on a month to month basis, or a 12 month basis, at the discretion of the Participating State or Entity; or

**b.** Return the Device to the Contractor, or have the Contractor pick the Device up.

**5. Short-Term Rental**

**5.1** A Purchasing Entity may have the option to enter into an Initial Rental Term of 12 months, based upon the Contractor's available options, and at the discretion of the Participating State or Entity.

**5.2** Upon the expiration of the Initial Rental Term, a Purchasing Entity shall return the Device to the Contractor, or have the Contractor pick the Device up.

**5.3** Short-Term Rentals are not permitted to be renewed beyond the Initial Rental Term.

## F. Leasing and Rental Terms and Conditions

**1. Possession and Return of Lease and Rental Devices**

**1.1** The Purchasing Entity is responsible for risk of loss to the Devices while the Devices are in Purchasing Entity's possession. Purchasing Entity shall be relieved of all risks of loss or damage to the Devices during periods of transportation and de-installation.

**1.2** Contractor or Authorized Dealer must notify a Purchasing Entity, in writing, of their End of Term (EOT) options at least sixty (60) days prior to the end of any Initial Lease or Rental Term. Such notification may include, but not be limited to, the following:

**a.** Any acquisition or return options, based on the type of lease or rental agreement;

**b.** Any renewal options, if applicable; and/or

**c.** Hard drive removal and surrender cost, if applicable.

**1.3** If a Purchasing Entity desires to exercise a purchase, renewal, or return of the Device, it shall give Contractor at least thirty (30) days written notice prior to the expiration of such lease or rental term. Notwithstanding anything to the contrary, if Purchasing Entity fails to notify Contractor of its intent with respect to the exercise of a purchase, renewal, or return of the Device, the Initial Lease or Rental Term shall be terminated on the date as stated in the Order and removal of the Device will be mutually arranged, unless otherwise specified in an Order.

**1.4** If the Purchasing Entity does not exercise the purchase or renewal option, it will immediately make the Device available to Contractor in as good of condition as when Purchasing Entity received it, except for ordinary wear and tear.

2. **Payment.** The first scheduled payment (as specified in the applicable Order), will be due following the Acceptance of the Device(s), or such later date as Contractor may designate. The remaining payments will be due on the same day of each subsequent month, unless otherwise specified in the applicable Order.

3. **Buyout to Keep Option.** A Purchasing Entity must notify the Contractor or Authorized Dealer, in writing, at least thirty (30) days in advance, if they wish to exercise the Buyout to Keep option on an FMV or Capital Lease. A Buyout to Keep option is not available on a Straight Lease.

4. **Buyout to Return Option.** A Purchasing Entity must notify the Contractor or Authorized Dealer, in writing, at least thirty (30) days in advance, if they wish to exercise the Buyout to Return option on an FMV or Straight Lease, and return the Device to the Contractor in good working condition (ordinary wear and tear excepted).

5. **Device Upgrade or Downgrade**. A Purchasing Entity may do a Device Upgrade or Downgrade on a lease or rental at anytime throughout the term of the lease or rental agreement. The Purchasing Entity and the Contractor shall negotiate the price of the Device Upgrade or Downgrade, but at no time shall the total cost of the Device Upgrade or Downgrade be less than the remaining stream of Device Payments.

6. **Non-appropriation of Funds.** The continuation of any lease or rental agreement will be subject to, and contingent upon, sufficient funds being made available by the Participating State Legislature and/or federal sources. The Purchasing Entity may terminate any such lease or rental agreement, and Contractor waives any and all claim(s) for damages, effective immediately upon receipt of written notice (or any date specified therein) if for any reason the Purchasing Entity's funding sources are not available.

7. **Assignment.** Purchasing Entity has no right to sell, transfer, encumber, sublet or assign the Device or any lease or rental agreement without Contractor's prior written consent (which consent shall not be unreasonably withheld).

   **7.1** Purchasing Entity agrees that Contractor may not sell or assign any portion of Contractor's interests in the Device and/or these Lease or Rental Terms or any Order for leases or rentals, without notice to Purchasing Entity even if less than all the payments have been assigned. In that event, the assignee (the "Assignee") will have such rights as Contractor assigns to them, but none of Contractor's obligations (Contractor will keep those obligations) and the rights of the Assignee will not be subject to any claims, defenses or set offs that Purchasing Entity may have against Contractor.

   **7.2** No assignment to an Assignee will release Contractor from any obligations Contractor may have to Purchasing Entity.

8. **Early Termination Charges**

   **8.1** Except in the case of Non-appropriation of funds, FMV, $1 Buyout, Straight Leases and Short-term Rentals shall be subject to an early termination charge, and shall

involve the return of the Device (in good working condition; ordinary wear and tear excepted) by the Purchasing Entity to the Contractor. With respect to the Device, the termination charge shall not exceed the balance of remaining Device Payments (including any current and past due amounts), and with respect to Service or maintenance obligations, the termination charge shall not exceed four (4) months of the Service and Supply base charge or twenty-five percent (25%) of the remaining Maintenance Agreement term, whichever is less.

**8.2** Cancellable Rentals shall not exceed a termination charge of three (3) months of Total Monthly Payments, or as otherwise agreed to by the Participating State or Entity.

**9. Default.** Each of the following is a "default" under these lease and rental terms:

**9.1** Purchasing Entity fails to pay any payment or any other amount within forty-five (45) days (or as otherwise agreed to in a Participating Addendum) of its due date;

**9.2** Any representation or warranty made by Purchasing Entity in these lease or rental terms is false or incorrect and Purchasing Entity does not perform any of its obligations under these lease or rental terms, and this failure continues for forty-five (45) days (or as otherwise agreed to in a Participating Addendum) after Contractor has notified Purchasing Entity;

**9.3** Purchasing Entity or any guarantor makes an assignment for the benefit of creditors;

**9.4** Any guarantor dies, stops doing business as a going concern, or transfers all or substantially all of such guarantor's assets; or

**9.5** Purchasing Entity stops doing business as a going concern or transfers all or substantially all of Purchasing Entity's assets.

**10. Remedies.** If a Purchasing Entity defaults on a rental or lease agreement, then Contractor, in addition to, or in lieu of, the remedies set forth in the Master Agreement, and Participating Addendum, may do one or more of the following, at the discretion of the Participating State or Entity:

**10.1** Cancel or terminate any or all Orders, and/or any or all other agreements that Contractor has entered into with Purchasing Entity;

**10.2** Require Purchasing Entity to immediately pay to Contractor, as compensation for loss of Contractor's bargain and not as a penalty, a sum equal to:

**a.** All past due payments and all other amounts payable under the lease or rental agreement;

**b.** All unpaid payments for the remainder of the lease or rental term, discounted at a rate equal to three percent (3%) per year to the date of default; and

**c.** Require Purchasing Entity to deliver the Device to Contractor per mutual arrangements.

## IV. Contractor Responsibilities and Tasks

## A. Service Requirements

1. **Technicians.** All technicians must be factory trained by the OEM and certified to Service the Devices.

2. **Standard Service Levels.** Participating States and/or Entities may negotiate their own Service Level Agreement (SLA) with the Contractor. The SLA, must, at a minimum, adhere to the following requirements:

### 2.1 End-User Training

**a.** Purchasing Entity may request an initial one-hour training session for each Device ordered under the Contract. Contractor shall provide this initial training, free of charge, via one of the following delivery methods: On-site, web-based, or on-line. The delivery method selected for each Device will be at Contractor's sole discretion. Purchasing Entity should be advised that while this initial one-hour of free training shall be provided by Contractor at Purchasing Entity's request, Contractor will not provide substitutions (e.g. free supplies, deeper discounts, etc.) in lieu of this training.

**b.** Purchasing Entity may also request an additional one-hour training session for technical support, which shall include network connectivity and print driver installation. This additional training shall be provided via a delivery method mutually agreed upon by Contractor and Purchasing Entity, and at a mutually agreed upon price.

**c.** If Purchasing Entity elects to exercise the training option, then Contractor shall provide the training within ten (10) Business Days of Purchasing Entity's request.

**d.** Contractor may offer additional on-site, one-hour training sessions for a flat rate fee. Additional charges for travel and per diem, if applicable, must be disclosed to the Purchasing Entity, and mutually agreed upon, prior to Order placement.

**e.** Contractor must provide on-site or off-site operational training to designated Purchasing Entity personnel, until the personnel are able to operate the Device independently. Pricing for operational training shall be based on a flat rate fee. Additional charges for travel and per diem, if applicable, must be disclosed to the Purchasing Entity, and mutually agree upon, prior to Order placement.

**f.** Contractor shall provide Device literature, user-manuals, and access to on-line resources, if available, at no charge to the Purchasing Entity.

**g.** For Groups A, B, D, and Sub-Group D1, Contractor shall provide a no charge, toll-free end-user technical support number that Purchasing Entities can utilize for everyday minor troubleshooting (i.e. this does not include network connectivity or print driver installation). A Purchasing Entity must be able to obtain assistance during Normal Business Hours.

**h.** Contractor shall provide phone/technical support within two (2) hours of Purchasing Entity's request for assistance, providing such request, and subsequent support, falls within normal business hours.

**2.2 Preventative Maintenance.** Contractor must perform all Preventative Maintenance Services at the Manufacturer's suggested intervals, or as specified in an Order. Preventative Maintenance shall not be a requirement on desktop Devices.

**2.3 Device Performance**

**a.** Device Downtime shall be computed from the time the Contractor is notified of Device failure until the time in which the Device is fully operational.

**b.** Device Downtime due to lack of consumable Supplies is not acceptable.

**c.** Contractor must provide daily communication to the Purchasing Entity regarding inoperable Devices, including updates regarding resolution timeframe, and any parts, Accessories, or Devices on back-order.

**2.4 Loaner Device.** If any Device in Group A or Group B is inoperable for two (2) Business Days, due to Device malfunction, as reasonably determined by Contractor, then Contractor shall provide the Purchasing Entity with:

**a.** A loaner Device of similar speed and capabilities until such time as the inoperable Device is now operable; or

**b.** At the discretion of the Participating State or Entity, provide the Purchasing Entity with off-site manned production capabilities, at the sole cost to the Contractor, to accomplish the work of the Device that is inoperable.

**2.5 Repair Parts**

**a.** Contractor shall guarantee the availability of repair parts for a minimum of five (5) years after the Purchasing Entity's Acceptance of any Device.

**b.** All Device components, spare parts, application software, and ancillary Devices that are supplied under any resulting Master Agreement, must conform to Manufacturer specifications.

**c.** Contractor shall be responsible for ensuring that any repair parts are operable and installed in accordance with Manufacturer specifications.

**d.** Repair parts may be new, reconditioned, reprocessed or recovered.

**2.6 Service Zones**

**a.** Unless otherwise specified in a Participating Addendum, Contractor shall adhere to the following Service Call Response Times based on the distance that their Service Base Location is from the Purchasing Entity:

| Service Zone | Definition | Response Time |
|---|---|---|
| Urban | Within 60 miles | 4 - 6 Hours |
| Rural | 60 – 120 miles | 1 - 2 Business Days |
| Remote | 120+ miles, or only accessible by plane or by boat | 4 – 5 Business Days |

**b.** Repair or replacement of parts and/or Devices shall occur within four (4) Business Days of Contractor arriving at Purchasing Entity's location, with the following exception:

**i)** If Contractor is drop-shipping a new Device to replace a defective Device, then Purchasing Entity must receive the new Device within three (3) Business Days.

**c.** Contractor(s) may charge different rates according to each Service Zone.

### 2.7 Service Logs

**a.** Contractor shall maintain a Service log which describes the maintenance and repair Services provided for each Device.

**b.** A no-cost copy of Service logs/reports must be provided to the Purchasing Entity or Participating State or Entity, within five (5) Business Days of the request.

### 2.8 Device Relocation

**a.** Device relocation Services include dismantling, packing, transporting, and re-installing Device.

**b.** Contractor may charge for this Service based on the following table:

| Service Zone | Distance from current placement of Device | Charge |
|---|---|---|
| 1 | Within the same building | No Charge Allowed* |
| 2 | Up to 50 miles from building in which Device is currently placed | Flat Rate Fee, plus Per Mile or Hourly Fee |
| 3 | More than 50 miles from building in which Device is currently placed | Flat Rate Fee, plus Per Mile or Hourly Fee |

*Contractor may charge Purchasing Entities a mutually agreed upon price for special rigging in the event a Purchasing Entity's demographics require such rigging for Zone 1 relocations. The price shall be agreed upon in writing by Contractor and Purchasing Entity prior to any Device relocation in Zone 1.

**c.** Contractor may not charge for any fees incurred due to fuel or tolls.

**d.** Moves must be performed within thirty (30) calendar days of the Purchasing Entity request. Request may be verbal or written, but Contractor must confirm the request in writing and provide a date that the move will occur. Written confirmation must be sent to the Purchasing Entity within three (3) Business Days of request. In the event that there will be a delay in these Services, Contractor shall communicate with Purchasing Entity and agree on a mutually beneficial time-frame.

**e.** Contractor is required to offer Device relocation services for all lease and rental Equipment.

**3. Meter Read Invoicing**

**3.1** In order for Contractor to generate accurate invoices, Purchasing Entities shall provide meter reads within the Contractor's requested time-frame.

**3.2** Invoices that are generated without receiving the proper meter read information from the Purchasing Entity will not be considered inaccurate.

**3.3** The Purchasing Entity shall provide written notice of any such alleged invoicing issue and the Contractor will be allowed a thirty (30) day cure period to address any such issue. During the thirty (30) day cure period, the Purchasing Entity will not be assessed any late fees for failure to submit payment by the invoice due date.

**3.4** Failure on the Contractor's part to maintain accurate invoicing shall result in a $25.00 per instance credit on the following month's invoice.

**4. Reporting**

**4.1 Service Level Calculations**

**a.** At the discretion of the Participating State or Entity, Contractor shall produce reports that can be measured against the required SLA components.

**b.** The Participating State or Entity shall determine how the reports will be utilized and whether liquidated damages will be assessed for failure to meet the SLA requirements. Any liquidated damages or penalty structure shall be defined in the Participating State or Entity's Participating Addendum.

**4.2 Periodic Reporting.** Contractor shall provide periodic reporting to all Purchasing Entities upon request. The reports shall be provided on a quarterly basis, or at the discretion of the Participating State or Entity.

**a.** The report shall include the following:

**i)** Number of Service Calls placed;

**ii)** Response Time per Device;

**iii)** Dates that Preventative Maintenance was performed, if applicable; and

**iv)** Estimated end of Useful Life per Device, based on current usage.

**b.** The report may include, but not be limited to, the following:

**i)** Location of Devices;

**ii)** Click usage per Device; and

**iii)** EPEAT certification level of each Device.

**B. Customer Service**

**1. Key Personnel.** Contractor shall ensure that staff has been allocated appropriately to ensure compliance with the resulting Master Agreement and subsequent Participating State or Entity requirements and that the individuals occupying the Key Personnel positions have adequate experience and knowledge with successful implementation and management of a national cooperative contract. Contractor shall provide a single point of

contact for the following:

**1.1 Master Agreement Contract Administrato**r – shall be the Lead State's primary contact in regards to Contract negotiations, amendments, Product and Price List updates, and any other information or documentation relating to the Master Agreement;

**1.2 NASPO ValuePoint Reporting Contact** – shall be responsible for submitting quarterly reports and the quarterly Administrative Fee to the appropriate personnel;

**1.3 Master Agreement Marketing Manager** – shall be responsible for marketing the resulting Master Agreement, as well as creating Participating State websites, and ensuring that all uploaded data and content is current; and

**1.4 National Service Manager** – shall be responsible for overseeing the Regional Service Managers, Field Service Technicians, training, and inside Service operations. This position will work with the Lead State Contract Administrator to ensure contractual obligations are met, while providing leadership for the Contractor's operations, as well as strategic planning of the Service department.

**2. Single Point of Contact**. Contractor shall provide a single point of contact for each Participating State, who will handle any questions regarding the Products provided, as well as pricing, delivery, billing, reporting, status of Orders, customer complaints and escalated issues.

**3. Service and Support Hours.** Contractor must provide full Service and support for Products during Normal Business Hours.

**4. Customer Service Team.** Contractor shall also have a designated customer service team who shall be available by phone (via local or toll free number), fax, or email during Normal Business Hours.

**5. Additional Coverage**. Contractor may offer additional coverage beyond Normal Business Hours for any Device that needs to be serviced. Such coverage shall be billed to the Purchasing Entity at an hourly rate.

**6. Online Access**. Customer service representatives shall have online access to account information and be able to respond to inquiries concerning the status of Orders (shipped or pending), delivery, back-orders, pricing, Product availability, Product information, and account and billing questions.

## C. Authorized Dealers

**1.** Contractor can engage Authorized Dealers to provide Products and/or Services.

**2.** In the event a Contractor elects to use Authorized Dealers in the performance of the specifications, the Contractor shall serve as the primary Contractor, and shall be fully accountable for assuring that their Authorized Dealers comply with the terms and conditions of the resulting Master Agreement, and any Participating Addendum, and shall be liable in the event Authorized Dealers fail to comply with such terms and conditions.

**3.** Authorized Dealers shall be expected to stay current with Contractor Products, pricing, Master Agreement, and Participating Addendum requirements, and Contractor shall

provide training to all of their Authorized Dealers at least once per calendar year, or as otherwise determined by the Lead State.

**4.** Authorized Dealers shall have the ability to accept Orders from a Purchasing Entity and invoice them directly, unless otherwise stated in a Participating Addendum.

**5.** Contractor shall send notice to the Lead State, utilizing **Exhibit C, Authorized Dealer Form** and **Exhibit D, Authorized Dealers by State,** within three (3) calendar days of engaging or removing a Dealer.

**6.** The Lead State reserves the right to deny the addition of any Authorized Dealer and will provide notification to the Contractor with justification as to why the decision was reached. In addition, it will be at the discretion of each Participating State or Entity as to whether they will utilize the Authorized Dealers as approved by the Lead State. Under no circumstances is a Participating State or Entity permitted to use a Dealer that has not been approved by the Lead State.

**7.** If an Authorized Dealer is performing unsatisfactorily, or is not in compliance with the Master Agreement, then it shall be at the discretion of the Lead State, upon recommendation from the Participating State, to:

**7.1** Require the Dealer to attend remedial training with either the Contractor or the Lead State or;

**7.2** Remove the Dealer from the Contract, or in the case of multiple branch locations in one state, or multiple states, remove them as a Dealer from the location in which they are not in compliance.

## D. Device Demonstration Requirements

**1.** Contractor may offer trial or demonstration Devices for any Group A, B, D, F and Sub-Group D1.

**2.** Trial or demonstration Devices may be new or used; however, no used, Remanufactured, or Refurbished Devices shall be converted to a purchase, lease, or rental.

**3.** At the discretion of the Participating State or Entity, and upon request by a Purchasing Entity, showroom Devices for Groups A and B may be converted to a purchase, lease, or rental providing the following conditions are met:

**3.1** The meter count on Group A and Group B Devices does not exceed 10,000 copies total (i.e. b&w and color combined);

**3.2** The Device must be discounted by at least 5% off of the Master Agreement pricing for that same Device; and

**3.3** The Purchasing Entity and the Contractor indicate on the Order that the Device is a showroom model.

**4.** Any trial or demonstration period shall be free to the Purchasing Entity and shall not exceed thirty (30) calendar days.

**5.** If Purchasing Entity does not make the demonstration Device available for pickup after thirty (30) calendar days, then Contractor may bill the Purchasing Entity for use of Device

for each day that it remains at Purchasing Entity's location. Such rates shall not exceed current market standards.

**E. Device Installation Requirements**

**1.** Prior to Order Acceptance, Contractor must advise Purchasing Entity of any specialized installation and site requirements for the delivery and installation of Device. This information should include, but is not limited to, the following:

**1.1** Air conditioning;

**1.2** Electrical;

**1.3** Special grounding;

**1.4** Cabling;

**1.5** Space;

**1.6** Humidity and temperature limits; and

**1.7** Other considerations critical to the installation.

**2.** The Purchasing Entity shall be responsible for furnishing and installing any special wiring or dedicated lines.

**3.** Network installation shall include configuration of the Device for the proper network protocols, and installation of the appropriate print drivers on up to five (5) computers per Device, or as otherwise specified in a Participating Addendum.

**4.** If applicable, all Devices must be set-up with Preventative Maintenance notifications turned on, and with the most environmentally responsible defaults enabled, including Energy Star saving settings.

**5.** Contractor may charge for excessive installation requirements, including rigging, access alterations, and access to non-ground floors via stairs. Any such excessive installation charges must be quoted to the Purchasing Entity prior to the signature of any Order, and shall be based on the actual expenditures of Contractor or Authorized Dealer.

**6.** Contractor or Authorized Dealers shall affix a label or a decal to the Device at the time of installation which shows the name, address, and telephone number of Contractor or Authorized Dealer responsible for warranty Service of the Device.

**7.** Contractor shall clean-up and remove all debris and rubbish resulting from their work as required by the Purchasing Entity. Upon completion of the work, the premises shall be left in good repair and in an orderly, neat, clean, and unobstructed condition.

**F. Security Requirements**

**1. Network and Data Security**

**1.1** Devices may be configured to include a variety of data security features. The set-up of such features shall be at the discretion of the Purchasing Entity, and all costs associated with their implementation must be conveyed by Contractor prior to Order placement.

**1.2** Contractor will not be permitted to download, transfer, or access print data stored

on the Device in either hard drive or chip memory. Only system management accessibility will be allowed.

**1.3** Contractor shall ensure that delivery and performance of all Services shall adhere to the requirements and standards as outlined in each Participating State or Entity's Participating Addendum.

**2. Sensitive Information**. Sensitive information that is contained in any Legacy Devices or applications shall be encrypted if practical. In addition, sensitive data will be encrypted in all newly developed applications. Since sensitive information is subjective, it shall be defined by each Participating State or Entity in their Participating Addendum.

**3. Data Breach.** Contractor shall have an incident response process that follows National Institute of Standards and Technology (NIST) standards as referenced in the NIST Computer Security Incident Handling Guide, which can be downloaded at https://www.nest.gov/publications/computer-security-incident-handling-guide, and it shall include, at a minimum, breach detection, breach notification, and breach response. Further, Contractor shall notify the impacted Purchasing Entity within 72 hours of learning of such breach.

**4. Authentication and Access**

**4.1** Any network connected Device must offer authentication for all features via LDAP and/or Windows AD, as well as the ability to disable authentication for any or all features.

**4.2** Any network connected Device must have the ability to connect via Dynamic Host Configuration Protocol (DHCP) or Static IP address.

**4.3** The credential information for any remote authentication method may not be maintained within the Device's memory.

**4.4** Access to the Device's administrative functions must be password protected per the Participating State or Entity requirements, and the default settings must be changed at the time of Device installation.

**5. Hard Drive Removal and Surrender**

**5.1** Contractor shall ensure that all hard drive data is cleansed and purged (if capable) from the Device at the end of its Useful Life, or when any hard drive is repossessed by Contractor; or

**5.2** At the Participating State or Entity's discretion, Contractor shall remove the hard drive from the applicable Device and provide the Purchasing Entity with custody of the hard drive before the Device is removed from the Purchasing Entity's location, moved to another location, or any other disposition of the Device. The Purchasing Entity shall then be responsible for securely erasing or destroying the hard drive.

**5.3** If Contractor takes possession of any Device at a Purchasing Entity's location, then they shall also remove any ink, toner, and associated Supplies (drum, fuser, etc.) and dispose of them in accordance with applicable law, as well as environmental, and health considerations, or as otherwise specified in a Participating Addendum.

**5.4** Hard drive sanitation shall be at no expense to the Purchasing Entity, however; Contractor may charge the Purchasing Entity a fee if the Purchasing Entity elects to keep the hard drive in their possession. Contractor must disclose the price for removal and surrender of the hard drive, prior to Order placement.

**5.5** If the hard drive is not removable, or the Device does not contain a hard drive, then Contractor must convey this to the Purchasing Entity at the time of Order placement. In the case of a non-removable hard drive, **section IV.I (5.1)** shall apply.

**5.6** If Contractor is removing another Manufacturer's Device, they are not permitted to remove the hard drive. Only the Manufacturer or their Authorized Dealer shall remove hard drives in their own Devices. Contractor shall work with the Manufacturer to ensure the requirements pursuant to this section are met.

**G. Contractor Notices.** Contractor shall notify the Lead State, Participating States, Participating Entities and all Purchasing Entities of any recall notices, warranty replacements, safety notices, or any applicable notice regarding the Products being sold. This notice must be received in writing (via postal mail or email) within thirty (30) calendar days of Contractor learning of such issues.

# EXHIBIT B – SAMPLE D&A CERTIFICATE

## NASPO VALUEPOINT MASTER AGREEMENT NO.
## AND THE STATE OF Insert Name of Participating State PARTICIPATING ADDENDUM NO.

## WITH Insert Name of Contractor

**To: Insert Name of Contractor or Authorized Dealer**

Pursuant to the provisions of the Master Agreement and Participating Addendum, Purchasing Entity hereby certifies and warrants that (a) all Equipment described in the Order has been delivered and installed; (b) Purchasing Entity has inspected the Equipment, and all such testing as it deems necessary has been performed by Purchasing Entity and/or Contractor to the Satisfaction of Purchasing Entity; and (c) Purchasing Entity accepts the Equipment for all purposes of the Order.

**Insert name of Purchasing Entity**

**By:** _____

**Title:** _____

**Date:** _____

# EXHIBIT C – AUTHORIZED DEALER FORM

**Manufacturer Name:** _____

(Check one)

☐ The Dealer listed below is authorized to provide Products and Services in accordance with the NASPO ValuePoint Multi-Function Devices and Related Software, Services and Cloud Solutions Master Agreement.

☐ The Dealer listed below will no longer provide Products and Services under the NASPO ValuePoint Multi-Function Devices and Related Software, Services and Cloud Solutions Master Agreement for the following reason (required):

_____

_____

_____

| | |
|---|---|
| State(s) Serviced by Dealer: | |
| Dealer Name: | |
| Address: | |
| Phone (include Toll-Free, if available): | |
| Contact Person(s): | |
| Email Address: | |
| FEIN: | |

Signed: _____ Date: _____
(Contractor Representative)

Signed: _____ Date: _____
(Authorized Dealer Representative)

_____
(Print First and Last Name of Authorized Dealer Representative)

DocuSign Envelope ID: CE9EDE21-548B-4156-BDF8-8383A0FC97D0

# EXHIBIT D – AUTHORIZED DEALERS BY STATE

Exhibit D -
Authorized Dealers by

# ATTACHMENT 1 – SHARP LEASE AGREEMENT

**Master Lease (Municipal)**

| | |
|---|---|
| **Master Lease Number:** | **Customer's Federal Tax ID#:** |
| **Customer Name:** | **Customer's Address (principal place of business):** |
| **Customer's d/b/a (if any):** | **Customer's Main Business Phone Number:** |

In this Master Lease Agreement, as it may be amended from time to time (the **"Master Lease "**), the words **"You"** and **"Your"** mean the Customer named above. **"We," "Us"** and **"Our"** mean Lessor (as indicated and signed on page 3)**.** **"Schedule"** means a document, in the form attached hereto as **Exhibit A** or such other form as We may accept in Our sole discretion, to be entered into between You and Us for each individual transaction entered into between You and Us pursuant to this Master Lease. **"Sharp"** means Sharp Electronics Corporation. Sharp or one of its authorized dealers ("Authorized Dealer") is the supplier of the Equipment to You. ***This Master Lease, each Schedule and the other documents executed or delivered by Us in connection herewith and therewith represent the final and only agreement between You and Us regarding the subject matter herein and therein and shall supersede any other oral or written agreements between You and Us. This Master Lease can be changed only by a written agreement between You and Us. Other agreements not stated herein (including, without limitation, those contained in any purchase agreement or other agreement between You and Sharp or Authorized Dealer) are not binding on Us. You agree this Master Lease and each Schedule may be executed in counterparts and any facsimile, photographic or other electronic transmission and/or electronic signing of this Master Lease and each Schedule by You when manually countersigned by US or attached to Our original signature counterpart and/or in Our possession shall constitute the sole original chattel paper as defined in the UCC for all purposes and will be admissible as legal evidence thereof. At Our option, We may require a manual signature.*** You hereby represent that this Master Lease is legally binding and enforceable against You in accordance with its terms.

1. ***LEASE OF EQUIPMENT - GENERAL*.** Each Schedule executed by You (and to be executed by You in the future) represents your agreement to lease from Us the personal property listed therein (together with all existing and future accessories, attachments, replacements, additions and embedded software, the **"Equipment"**), and/or to finance certain licensed software and services ("Financed Items", which are included in the word "Equipment" unless separately stated), upon the terms stated in such Schedule and this Master Lease, the terms and conditions of which are incorporated by reference into the Schedule (collectively, a **"Lease"**). Each Schedule, including the terms and conditions incorporated therein by reference, shall be considered a separate and independent Lease. If the Equipment includes any software, You agree that (i) We don't own the software, (ii) You are responsible for entering into any necessary software license agreements with the owners or licensors of such software, (iii) You shall comply with the terms of all such agreements, if any, and (iv) any default by You under any such agreements shall also constitute a default by You under this Master Lease and the related Schedule. The initial term of each Lease will begin on a date designated by Us after We accept it (the **"Commencement Date"**) and will continue for the number of months shown on such Schedule (**"Initial Term"**). You promise to pay to Us the periodic payments shown on each Schedule in accordance with the payment schedule set forth therein, plus all other amounts stated herein and therein. Each Schedule is binding on You as of the date You sign it. After You sign a Schedule, We may (i) insert the Schedule or contract number thereon and any other information missing in such Schedule, and ii) lease payment may be adjusted to include applicable sales tax and to comply with the tax laws of the state in which the Equipment is located.

2. ***NON-CANCELABLE TERM*.** As used herein, **"Present Term"** means the term presently in effect at any time with respect to a Lease, whether it is the Initial Term or a Renewal Term (as defined below). With respect to each Lease, **You shall notify Us in writing at least 30 days before the end of the Present Term (the "Notice Period") that You intend to return the Equipment at the end of such Present Term or enter into a Renewal Term, per the terms and conditions outlined in the NASPO ValuePoint Master Agreement. Should you choose to renew the Lease, then**) the payment amount and other terms of such Lease will continue to apply. If You do notify Us in writing within the Notice Period that You intend to return the Equipment at the end of the Present Term, then, promptly upon the expiration of such Present Term, You shall return the Equipment pursuant to Section 13 below. **Each Lease is non-cancelable during the Initial Term and any Renewal Term.**

3. ***UNCONDITIONAL OBLIGATIONS.*** With respect to each Lease, You agree that: **(a) We are a separate and independent company from Sharp or its Authorized Dealer, the manufacturer and any other vendor (collectively, "Vendors"), and the Vendors are NOT Our agents; (b) no statement, representation or warranty by any Vendor is binding on Us, and no Vendor has authority to waive or alter any term of this Master Lease or any Schedule; (c) You, not We, selected all Equipment and the Vendors based on Your own judgment; (d) Your duty to perform Your obligations under this Master Lease and each Schedule are unconditional and irrevocable and are not subject to any setoff, reduction, withholding, counterclaim, or defense for any reason whatsoever including any failure of any Equipment, the existence of any law restricting the use of any Equipment, or any other adverse condition; (e) if You are a party to any maintenance, service, supplies or other contract with any Vendor, We are NOT a party thereto, such contract is NOT part of this Master Lease or any Schedule (even though We may, as a convenience to You and a Vendor, bill and collect monies owed by You to such Vendor), We have no obligations to You under such contract, and no breach by any Vendor will excuse You from performing Your obligations to Us under this Master Lease or any Schedule; and (f) if the Equipment is unsatisfactory or if any Vendor fails to provide any service or fulfill any other obligation to You, You shall not make any claim against Us and shall continue to perform all of Your obligations to Us.**

4. ***PAYMENTS.*** The payments due pursuant to each Schedule, plus applicable taxes and other charges provided for herein and in the Schedule, shall be due and payable by the due date set forth in Our invoice to You. In order to facilitate an orderly transition, including installation and training, and to provide a uniform billing cycle, the start date of this Agreement (the "Effective Date") will be a date after the certification of acceptance of the Equipment, as shown on the first invoice. The payment for this transition period will be based on the base minimum usage payment, prorated on a 30-day calendar month, and will be added to your first monthly Payment. The payments due under a Schedule may include additional copy charges at the "Overage Copy Charge" rate specified in the Schedule for copies in excess of the Monthly Copy Allowance provided in the Schedule. You agree to (a) provide Us or Sharp or its Authorized Dealer by telephone or facsimile with the actual meter readings whenever You are requested to do so, (b) allow Us or Sharp or its Authorized Dealer to attach an automatic meter reading device to the Equipment, which meter reading device You will not remove or alter without approval from Us or Sharp or its Authorized Dealer, and/or (c) give Us or Sharp or its Authorized Dealer access to the Equipment to obtain meter readings or audit the meter reading device. If We or Sharp or its Authorized Dealer request You to provide meter readings and You fail to do so within 7 days of the date of such request, then (i) the number of copies used by You may be estimated by Us or Sharp or its Authorized Dealer and We will invoice You accordingly, and (ii) We will adjust the estimated charge for excess copies upon receipt of actual meter readings. Restrictive endorsements on checks will not be binding on Us. All payments received will be applied to past due amounts and to the current amount due in such order as We determine. Any security deposit or estimated future Governmental Charge (as defined in Section 10 below) that You pay with respect to a Lease is non-interest bearing, may be commingled with Our funds, may be applied by Us at any time to past-due amounts, and the unused portion will be returned to You within 90 days after the end of this Lease. If We do not receive a payment in full on or before its due date, You shall pay interest on the part of the payment that is late in the amount of 1% per month ("Time-Value Interest") from the due date to the date paid. If any check is dishonored, You shall pay Us a fee of $20.00. Promptly following Our request, from time to time, You shall furnish Us with current financial statements.

5. ***RESERVED***

6. ***NO WARRANTIES*. WE ARE LEASING ALL EQUIPMENT TO YOU "AS IS". We have not made and we hereby disclaim any and all warranties, express or implied, arising by applicable law or otherwise, including without limitation, the implied warranties of merchantability and fitness for a particular purpose.** We hereby transfer to You, **without recourse to Us**, all automatically transferable warranties, if any, made to Us by the Vendor(s) of the Equipment. You agree that each Lease is a "finance lease" under the Uniform Commercial Code (the **"UCC"**) unless otherwise expressly stated in the related Schedule or as provided by law. To the extent permitted by law, You hereby waive any and all rights and remedies conferred upon You under UCC Sections 2A-303 and 2A-508 through 522. You may be entitled under Article 2A of the UCC to the promises and warranties (if any) provided to Us by some or all of the Vendor(s) in connection with or as part of the contracts (if any) by which We acquire Equipment from such Vendor(s). You may contact such Vendor(s) for an accurate and complete statement of those promises and warranties (if any), including any disclaimers and limitations of them or of remedies. If it is determined that any Lease is a lease intended as security and/or the related Schedule grants to You a $1.00 purchase option, then **You hereby grant to Us a security interest in the related Equipment and all proceeds thereof**. You authorize Us to record UCC financing statements to protect Our interests in the Equipment.

7. ***DELIVERY, LOCATION, OWNERSHIP, USE, MAINTENANCE OF EQUIPMENT*.** Sharp or its Authorized Dealer will install (and, with Our prior consent, remove) the Equipment in accordance with Sharp's or its Authorized Dealer's service policies. You are responsible for all Equipment maintenance. You shall not remove any Equipment from the Equipment location specified in the related Schedule unless You first get Our permission. You shall give Us access to

each Equipment location so that We may inspect the Equipment whether performed prior to or after the Commencement Date of the related Lease. Unless otherwise stated in the related Schedule or as provided by law, **We will own and have title to all Equipment (excluding any software) during each Lease.** You agree that all Equipment is and shall remain personal property. Without Our prior written consent, You will not permit it to become (i) attached to real property or (ii) subject to any liens or encumbrances. **You represent that all Equipment will be used solely for commercial purposes and not for personal, family or household purposes.** You shall use all Equipment in accordance with all laws, operation manuals, any service contracts and insurance requirements, and shall not make any permanent alterations to it. At Your cost, You shall keep all Equipment in good working order and warrantable condition, ordinary wear and tear excepted (**"Good Condition"**).

8. ***LOSS; DAMAGE; INSURANCE*.** With respect to each Lease, You shall, at all times during the Initial Term and any Renewal Term, (i) bear the risk of loss and damage to the Equipment, while it is in Your possession, and shall continue performing all Your obligations to Us even if it becomes damaged or suffers a loss, (ii) keep the Equipment insured against all risks of damage and loss (**"Property Insurance"**) in an amount equal to its original cost, with Us named as sole "loss payee," and (iii) carry public liability insurance covering bodily injury and property damage (**"Liability Insurance"**) in an amount acceptable to Us, with Us named as "additional insured." You have the choice of satisfying these insurance requirements by providing Us with satisfactory evidence of Property and Liability Insurance (**"Insurance Proof"**), within 30 days of the Commencement Date of such Lease. Such Insurance Proof must provide for at least 30 days prior written notice to Us before it may be cancelled or terminated and must contain other terms satisfactory to Us. **If you do not provide Us with Insurance Proof within 30 days of the Commencement Date of any Lease, or if such insurance terminates for any reason, then (a) You agree that We have the right, but not the obligation, to obtain such Property Insurance and/or Liability Insurance in such forms and amounts from an insurer of Our choosing in order to protect Our interests ("Other Insurance"), and (b) You agree that We may charge you a periodic charge for such Other Insurance.** This periodic charge will include reimbursement for premiums advanced by Us to purchase Other Insurance, billing and tracking fees, charges for Our processing and related fees associated with the Other Insurance, and a finance charge of up to 18% per annum (or the maximum rate allowed by law, if less) on any advances We make for premiums, (collectively, the **"Insurance Charge"**). We and/or one or more of our affiliates and/or agents may receive a portion of the Insurance Charge, **which may include a profit.** We are not obligated to obtain, and may cancel, Other Insurance at any time without notice to You. Any Other Insurance need **not** name You as an insured or protect Your interests. The Insurance Charge may be higher than the amount You would pay if You obtained Property and Liability Insurance on Your own. You are responsible for the risk of loss or for any destruction of or damage to the Equipment while it is in Your possession. You agree to promptly notify us in writing of any loss or damage. If the Equipment is destroyed and we have not otherwise agreed in writing, you will pay to us the unpaid balance of this Agreement, including any future rent to the end of the term plus the anticipated purchase price of the Equipment (both discounted at 3%). Any proceeds of insurance will be paid to us and credited, at our option, against any loss or damage. You authorize us to sign on your behalf and appoint us as your attorney-in-fact to endorse in your name any insurance drafts or checks issued due to loss or damage to the Equipment.

9. ***ASSIGNMENT*. You shall not sell, transfer, assign or otherwise encumber (collectively, "Transfer") this Master Lease or any Schedule, or Transfer or sublease any Equipment, in whole or in part.** We may, with notice to You, Transfer Our interests in any Equipment and/or this Master Lease or any Schedule, in whole or in part, to a third party (**"New Owner"**), and if so, the New Owner will, to the extent of the Transfer, have all of Our rights and benefits but will not have to perform Our obligations (if any). You agree not to assert against the New Owner any claim or defense You may have against Us or any predecessor in interest.

10. ***TAXES AND OTHER FEES*.** You are responsible for all applicable taxes (including, without limitation, sales tax (if applicable) and personal property taxes, and excluding only taxes based on Our income), levies, assessments, license and registration fees and other governmental charges relating to this Master Lease, each Schedule and/or the related Equipment (collectively **"Governmental Charges"**). You agree to promptly pay Us, on demand, estimated future Governmental Charges. You authorize Us to pay any Governmental Charges as they become due, and You agree to reimburse Us promptly upon demand for the full amount (less any estimated amounts previously paid by You). You agree to pay Us a fee for preparing and filing personal property tax returns, and You agree not to file any personal property tax returns. You also agree to pay Us upon demand (i) for all costs of filing, amending and releasing UCC financing statements, and (ii) a processing fee of $75.00 (or as otherwise agreed) per Lease to cover Our investigation and other administrative costs in originating such transaction. You also agree to pay Us a fee, in accordance with Our current fee schedule, which may change from time to time, for additional services We may provide to You at Your request. **You agree that the fees set forth in this Master Agreement may include a profit.**

11. ***SAVINGS CLAUSE*.** If any amount charged or collected under this Master Lease or any Schedule is greater than the amount allowed by law, including, without limitation, any amount that exceeds applicable usury limits (an **"Excess**

**Amount"**), then (i) any Excess Amount charged but not yet paid will be waived by Us and (ii) any Excess Amount collected will be refunded to You or applied to any other amount then due hereunder.

12. ***DEFAULT*.** With respect to each Lease, You will be in default if You (1) fail to pay any amount due within 45 days of the due date, (2) breach or attempt to breach any other term, representation or covenant set forth herein, the related Schedule, (3) die (if You are an individual), go out of business or commence dissolution proceedings, (4) become insolvent, admit Your inability to pay Your debts, make an assignment for the benefit of Your creditors (or enter into a similar arrangement), file (or there is filed against You) a bankruptcy, reorganization or similar proceeding or a proceeding for the appointment of a receiver, trustee or liquidator, or (5) suffer an adverse change in Your financial condition and, as a result thereof or for any other reason, We deem Ourselves insecure. If You default, We may do any or all of the following with respect to any one or more Schedules: (A) cancel the related Lease, (B) require You to return the Equipment pursuant to Section 13 below, (C) take possession of and/or render the Equipment (including any software) unusable, including the use of any Financed Items, and for such purposes You hereby authorize Us and Our designees to enter Your premises, with or without prior notice or other process of law, (D) require You to pay to Us, on demand, an amount equal to the sum of (i) all payments and other amounts then due and past due, (ii) **all remaining payments for the remainder of the then Present Term thereof** discounted at a rate of 6% per annum, (iii) Time-Value Interest on the amounts specified in clauses "i", "ii" and "iii" above from the date of demand to the date paid, and (iv) all other amounts that may thereafter become due hereunder to the extent that We will be obligated to collect and pay such amounts to a third party (such amounts specified in sub-clauses "i" through "iv" referred to below as the **"Balance Due"**), and/or (E) exercise any other remedy available to Us under law. In addition, we will have the right, immediately and without notice or other action, to set-off against any of your liabilities to us any money, including depository account balances, owed by us to you, whether or not due. You also agree to reimburse Us on demand for all reasonable expenses of enforcement (including, without limitation, reasonable attorneys' fees and other legal costs) and reasonable expenses of repossessing, holding, preparing for disposition, and disposition (**"Remarketing"**) of Equipment, plus Time-Value Interest on the foregoing amounts from the date of demand to the date paid. In the event We are successful in Remarketing the Equipment, We shall give You a credit against the Balance Due in an amount equal to the present value of the proceeds received and to be received from Remarketing minus the above-mentioned costs (the **"Net Proceeds"**). **If the Net Proceeds are less than the Balance Due, You shall be liable for such deficiency.** Any delay or failure to enforce Our rights under a Lease shall not constitute a waiver thereof. If We are holding any money belonging to You at any time during a Lease, You agree We may retain and utilize such money to cure any default by You under any Lease. BOTH PARTIES SHALL NOT BE LIABLE FOR ANY SPECIAL, RESULTING, OR CONSEQUENTIAL DAMAGES.

13. ***RETURN OF EQUIPMENT*.** If You are required to return any Equipment pursuant to the terms hereof, You shall, promptly upon demand, send the Equipment to a location(s) designated by Us. The Equipment must be received in Good Condition (as defined in Section 7). If the Equipment is not received within 30 days of the date of demand, You agree to continue paying the scheduled payments and all other amounts due pursuant to the related Schedule until it is received by Us.

14. ***APPLICABLE LAW; VENUE; JURISDICTION*.** Each Lease shall be deemed to be performed in the Purchasing Entity State. **This Lease shall be governed by the laws of the Purchasing Entity State . All legal actions relating to this Lease shall be filed and adjudicated exclusively in a state or federal court located in the Purchasing Entity State. You hereby agree not to object to such venue, and You consent to personal jurisdiction in such courts. You and We hereby waive Your and Our respective rights to a trial by jury in any legal action.** Each provision hereof shall be interpreted to the maximum extent possible to be enforceable under applicable law. If any provision is construed to be unenforceable, such provision shall be ineffective only to the extent of such unenforceability without invalidating the remainder hereof.

15. ***NON-APPROPRIATION OF FUNDS***. You hereby represent, warrant and covenant unto Us that: (a) You intend, subject only to the provisions of this Section 15, to remit to Us all sums due and to become due under each Lease for the full Present Term; (b) Your governing body has appropriated sufficient funds to pay all payments and other amounts due under each Lease during the first fiscal period applicable thereto; (c) You reasonably believe that legally available funds in an amount sufficient to make all payments for the full Present Term of each Lease can be obtained; and (d) You intend to do all things lawfully within Your power to obtain and maintain funds from which payments may be made, including making provision for such payments to the extent necessary in each budget or appropriation request submitted and adopted in accordance with applicable law. Notwithstanding the foregoing, the decision whether or not to budget and appropriate funds is within the discretion of Your governing body. In the event Your governing body fails to appropriate sufficient funds to pay all payments and other amounts due and to become due in Your next fiscal period, You may, subject to the terms hereof, terminate the applicable Lease as of the last day of the fiscal period for which the appropriations were received (an "Event of Non-appropriation"). You agree to deliver notice of an Event of Non-appropriation at least 30 days prior to the end of Your then-current fiscal period, or if an Event of Non-appropriation has

not occurred by that date, promptly upon the occurrence of any such Event of Non-appropriation and to return the Equipment pursuant to Section 13 above on or before the effective date of termination. You and We understand and intend that Your obligation to pay lease payments and other amounts due under each Lease shall constitute a current expense and shall not in any way be construed to be a debt in contravention of any applicable constitutional or statutory limitations or requirements concerning Your creation of indebtedness, nor shall anything contained herein constitute a pledge of Your general tax revenues, funds or monies.

**16.** ***ADDITIONAL REPRESENTATIONS, WARRANTIES AND COVENANTS***. In addition to the other representations, warranties and covenants made by You as set forth in this Master Lease, You hereby represent, warrant and covenant unto Us that: (a) You have the power and authority under applicable law to enter into this Master Lease and each Lease Schedule and the transactions contemplated hereby and thereby and to perform all of Your obligations hereunder and thereunder, (b) You have duly authorized the execution and delivery of this Master Lease and each Lease Schedule by appropriate official action of Your governing body and You have obtained such other authorizations, consents and/or approvals as are necessary to consummate this Master Lease and each Lease Schedule, (c) all legal and other requirements have been met, and procedures have occurred, to render this Master Lease and each Lease Schedule enforceable against You in accordance with their respective terms, and You have complied with such public bidding requirements as may be applicable to this Master Lease and each Lease Schedule and the transactions contemplated hereby and thereby, and (d) You or any other person who you control, own a controlling interest in, or who owns a controlling interest in or otherwise controls You in any manner are and will remain off of any sanction-related list of designated persons maintained by the U.S. Department of Treasury's Office of Foreign Assets Control of successor or the U.S. Department of State. **You hereby acknowledge that each of the representations, warranties and covenants made by You in Section 15 and 16 and elsewhere in this Master Lease are being materially relied upon by Us in purchasing the Equipment and entering into each Lease Schedule**.

**17.** ***IMPORTANT INFORMATION ABOUT PROCEDURES FOR OPENING AN ACCOUNT:*** To help the United States fight the funding of terrorism and money laundering activities, Federal law requires all financial institutions to obtain, verify, and record information that identifies each person who opens an account. What this means for you: When you open an account, we will ask for your legal name, address, Tax ID#, and other information that will allow us to identify you. We may also ask for copies of certified articles of organization, an unexpired government issued business license, a partnership agreement or other documents that indicate the existence and standing of the entity.

***DO NOT SIGN THIS CONTRACT BEFORE YOU READ AND UNDERSTAND IT.***
***PLEASE SEEK LEGAL COUNSEL BEFORE SIGNING IF YOU HAVE QUESTIONS.***

| | |
|---|---|
| **Customer:**<br>By: **X** _____ Date: ____ / ____ / ___<br>Print name: Title: | **Accepted by Lessor**: _____ (to be filled in by Lessor)<br>By: _____<br>Acceptance Date: _____ / _____ / _____ (to be filled in by Lessor) |

# ATTACHMENT 2 – SHARP MAINTENANCE AGREEMENT

SHARP

START DATE:
/ /

| CUSTOMER BILL TO INFORMATION | | |
|---|---|---|
| CUSTOMER NAME | | |
| ADDRESS | | |
| CITY | STATE | ZIP CODE |
| BILLING CONTACT | | |
| PHONE | | |
| EMAIL ADDRESS | | |
| | | |
| NASPO CONTRACT NUMBER | | |
| PURCHASE ORDER NUMBER | | |

| CUSTOMER LOCATION | | |
|---|---|---|
| CUSTOMER NAME | | |
| ADDRESS | | |
| CITY | STATE | ZIP CODE |
| SERVICE CONTACT | PHONE | |
| EMAIL ADDRESS | | |
| METER CONTACT | PHONE | |
| EMAIL ADDRESS | | |
| MICAS CONTACT (If Applicable) | PHONE | |
| EMAIL ADDRESS | | |

| MAINTENANCE PLAN | |
|---|---|
| ❑ | **MFP/PRINTERS ALL INCLUSIVE MAINTENANCE: (WITH SUPPLIES)** Color and B & W Devices. Includes Labor, Parts and Supplies. (Does not include Paper or Staples) |
| ❑ | **MFP/PRINTER MAINTENANCE (NO SUPPLIES INCLUDED):** Color and B & W Devices. Includes Labor, Parts & Drums only |
| ❑ | **PRINTER MAINTENANCE PLAN (NO SUPPLIES INCLUDED):** Includes Labor and Parts only |
| ❑ | **OTHER:** |

## DETAIL OF CHARGES

| MODEL NUMBER | SERIAL NUMBER | CATEGORY | BASE CHARGE | BILLING FREQUENCY (Monthly or Quarterly) | CATEGORY | INCLUDED IMAGES | EXCESS CHARGE | BILLING FREQUENCY (Monthly or Quarterly) | STARTING METER |
|---|---|---|---|---|---|---|---|---|---|
| | | BW | | | BW | | | | |
| | | COLOR | | | COLOR | | | | |

| COMMENTS / SPECIAL INSTRUCTIONS |
|---|
| |
| |
| |

| AUTHORIZATION | |
|---|---|
| I have read and understand our obligations under the terms and conditions and on the attached Customer Care Maintenance Agreement Terms and Conditions pages 2-3. All oral and other discussions are superseded by this Agreement. I understand all meter counts are based on 8.5 X 11 (minimum) single sided images | Sharp Authorization DATE<br>AUTHORIZED CUSTOMER PRINTED NAME<br>AUTHORIZED CUSTOMER SIGNATURE DATE |

1. **MAINTENANCE AGREEMENT**
During the term hereof Sharp will arrange for a designated Sharp Authorized Service Provider to repair or replace, in accordance with the terms and conditions of this Agreement, any part of the Equipment that causes the Equipment to not perform in accordance with published operating specifications under operating conditions of normal wear and tear.

Equipment eligible for coverage under this Agreement, and added under separate schedules from time to time, must be currently under warranty or to be renewed under a current Maintenance Agreement with the Authorized Service Provider. Equipment that is not under warranty or a renewal of an existing Maintenance Agreement will be subject to inspection and repair to manufacturer operating specifications prior to acceptance under this Agreement. Equipment over five (5) years old may be subject to decline for acceptance under this Agreement or for coverage at additional charge, per the terms and conditions in the NASPO ValuePoint Master Agreement ("Master Agreement"). Replacement parts will be furnished on an exchange basis and will be new, reconditioned or used; all parts removed due to replacement will become the property of the Authorized Service Provider. Maintenance services provided by the Authorized Service Provider under this Agreement do not include the following:

a) repairs resulting from accident or misuse by the Customer (including without limitation improper voltage or the use of supplies that do not conform to the manufacturer's specifications).
b) repairs made necessary by service performed by person(s) other than the Dealer.
c) additional service calls or work that the Customer requests to be performed outside regular business hours.
d) removal, rebuilding or remanufacturing of the equipment.
e) provision or replacement of consumable supplies such as paper, toner, developer or staples (unless included on the front side of this Agreement).

2. **GENERAL SCOPE OF COVERAGE** This Agreement covers both the labor and the material for adjustments, repair and replacements of parts ("Maintenance") as required by normal use of the equipment identified on the front page of this Agreement ("Equipment"). Authorized Service Provider may charge for excessive installation requirements, including rigging, access alterations, and access to non-ground floors via stairs. Any such excessive installation charges must be quoted to the Purchasing Entity prior to the signature of any Order and shall be based on the actual expenditures of Authorized Service Provider. Service necessary to repair damage to the Equipment caused by misuse, abuse, negligence, attachment of unauthorized components, accessories or parts, use of substandard paper or substandard supplies, other causes beyond the control of Authorized Service Provider or such causes which would void the Equipment's warranty are not covered by this Agreement. Any such repairs identified in the proceeding sentence shall be separately billed to customer and may lead to the termination of this Agreement. In addition, Authorized Service Provider may terminate this Agreement if the equipment is modified, damaged, altered or serviced by personnel other than the Authorized Service Provider Personnel, or if parts, accessories, or components not meeting machine specifications are added to the Equipment. Maintenance shall not cover charges for repairs needed as a result of Customer or third-party modifications to software or hardware. Authorized Service Provider reserves the right to assess additional charges to resolve complex integration issues.

3. **MAINTENANCE VISITS** Maintenance services as described in Paragraph 1 hereof will be provided at the Customer's place of business where the Equipment is located, indicated on the Schedule attached, Monday through Friday except holidays during the hours 9:00 AM to 5:00 PM. Preventative maintenance for the Equipment will be provided as determined by the Authorized Service Provider.

Remedial maintenance will be provided after notification by the Customer that the Equipment is inoperative. The response time for urban service calls is an average of four (4) to six (6) hours. Calls for outlying areas (60 to 120 miles from Authorized Service Provider) will be responded to within one to two business days. Maintenance visits requested for holidays, weekends or after standard business hours may result in additional charges for travel and labor pursuant to Authorized Service Provider's standard overtime rates in effect at the time of the Maintenance visit. Authorized Service Provider will not connect, disconnect, repair or otherwise service non-Sharp approved attachments, components or accessories. Customer is responsible for disconnecting and reconnecting non-Sharp approved attachments, components or accessories. Maintenance performed during a Maintenance visit includes lubrication and cleaning of the Equipment and the adjustment, repair or replacement of parts described below. Authorized Service Provider reserves the right to exchange unit in certain situations rather than service on site.

4. **REPAIR AND REPLACEMENT OF PARTS** All parts necessary to the operation of the Equipment requiring replacement due to normal wear and tear, subject to

the general scope of coverage, will be furnished free of charge during a service call.

5. **MAJOR REPAIRS, REPLACEMENT, AND UPGRADES** Repairs and/or services that fall outside the scope of this Agreement may be billed at the rates outlined in the Master Agreement, with prior authorization. This includes but is not limited to abuse/misuse, alteration or modification, 3rd party interference, use of non- standard supplies, usage beyond recommended operating parameters, theft, neglect, fire, water, casualty or other natural force. Failure to authorize repair and/or services may result in suspension or termination of this Agreement.

   ***Addition or Removal of Equipment:*** Customer is required to immediately notify Authorized Service Provider upon installation of any additional equipment at Customer's site capable of using Authorized Service Provider supplied toner cartridges. Upon installation, such equipment shall automatically be covered by this Agreement and shall be considered the Equipment for all purposes under this contract, unless Authorized Service Provider determines the new equipment is out of contract scope. Customer is required to notify Authorized Service Provider of any equipment changes or disposition (i.e. physically moved or removed for retirement purposes, etc.). For both additions and deletions to the Equipment, Customer must submit a configuration report generated from the printer to Authorized Service Provider.

6. **USE OF SUPPLIES** Customer is obligated to use Authorized Sharp approved supplies under this Agreement. If, however, the Customer uses other than Sharp approved supplies (other than paper) and such supplies result, in Authorized Service Provider's reasonable judgment, additional Maintenance, then Authorized Service Provider may, at its option, terminate this Agreement. If Authorized Service Provider terminates this Agreement, Authorized Service Provider may make service available on a "Per Call" basis based upon Authorized Service Provider's standard rates in effect at the time of service.

7. **SUPPLIES** Consumable Supplies: If a supplies inclusive option is selected, Authorized Service Provider will provide toner for covered Equipment on an as needed basis. Consumable supplies do not include staples or paper. The consumable supplies provided are intended to be used exclusively in the covered Equipment. Customer bears the risk of loss of unused supplies in the event of theft, employee misconduct, fire or other mishap, while the supplies are in the customer's possession.

8. **PLACEMENT AND ELECTRICAL REQUIREMENTS** Customer shall be responsible to ensure that Equipment is placed in a location that meets manufacturer's requirements including space, power, network, temperature and humidity. In order to ensure optimum performance of the Equipment, Customer must comply with all Sharp required electrical specifications, including but not limited to use of designated circuit and outlets and required voltage requirements. These power standards are required by UL and/or local safety regulations.

9. **INSTALLATION** Physical installation, removal of packing material and initial setup of Equipment will be performed by Authorized Service Provider using default configuration settings at the location specified by Customer. Application of custom settings can be requested prior to installation. Authorized Service Provider reserves the right to assess additional charges depending upon the extent of custom setup requirements.

10. **METER READINGS** Customer is obligated to provide meter reading(s) in a timely manner upon request. If the Customer fails or refuses to provide the meter reading in a timely manner, Authorized Service Provider may estimate the meter based upon historical meter readings. The estimated meter will then be applied in the same manner as if the meter had been supplied by the Customer and the Customer agrees to pay any overage charges that may result from the estimated meter reading. Once the actual meter read is then provided by Customer, Authorized Service Provider shall credit the customer for any estimated meter reads that exceeded the actual meter count.

11. **TERM** This Agreement shall become effective upon Authorized Service Provider's receipt from Customer of the initial maintenance charge, as set forth on the first page of this Agreement, or for such Customers that are to be billed in arrears, upon the date indicated in the "Start Date" portion of the first page of this Agreement. The term of this Agreement shall be as specified on the face page of this Agreement. For leased Equipment, the term of the Maintenance Agreement therefor shall be equal to the term of the lease. For purchased Equipment, the term of the Maintenance Agreement shall be as specified on the related Order. Maintenance Agreements shall not be subject to automatic renewal; if you desire to renew a Maintenance Agreement, the pricing during the renewal term shall be as determined pursuant to the Master Agreement.

    In the event that Customer reaches or exceeds the allowance, as specified on the first page of this Agreement, prior to the expiration of the initial term, or any renewal term under this Agreement, Customer hereby agrees to pay Authorized Service Provider the excess meter rate, as outlined in the Master Agreement at the time this Maintenance Agreement was executed.

12. **EVENT OF DEFAULT AND TERMINATION** The Customer's failure to pay any amount due under this Agreement, or breach of any other obligation herein shall constitute an Event of Default. Upon an Event of Default, Authorized Service Provider may, in its discretion take any one or more of the following actions: (i) cease performing all Maintenance or any other services under this Agreement; (ii) furnish Maintenance or service upon a prepaid, "Per Call" basis; and/or (iii) terminate this Agreement. Customer shall be obligated to pay any amounts due and owing to Authorized Service Provider within (10) ten days of the expiration or termination of this Agreement. Customer, upon payment of all such amounts due, shall thereafter have no further liability or obligation to Authorized Service Provider whatsoever for any further fees or expenses arising hereunder. In the event Authorized Service Provider terminates this Agreement because of the breach of Customer, Authorized Service Provider shall be entitled to payment for work in progress plus reimbursement for out-of-pocket expenses.

13. **ENTIRE AGREEMENT** The foregoing terms and conditions and those contained in the Master Agreement, as well as the Master Agreement price lists described herein constitute the entire agreement between Authorized Service Provider and Customer with respect to its subject, in addition to additional terms and conditions in Customer's purchase orders or other documents of Customer. All other prior agreements, proposals, and understandings with respect to the subject matter of this Agreement are merged herein, and there are no promises, terms, conditions or obligations with respect thereto other than those contained herein. This Agreement may be amended only by written instrument executed by both parties.

14. **ASSIGNMENT** This Agreement is not assignable. Any attempt to assign or transfer rights, duties or obligations hereof is void.

15. **COUNTERPARTS AND ELECTRONIC SIGNATURES** This Agreement may be executed in several counterparts, each of which shall be deemed to be an original and all of which together shall constitute one Agreement binding on all parties hereto, notwithstanding, that all the parties have not signed the same counterpart. A faxed or electronic signature of this Agreement bearing authorized signatures may be treated as an original.

16. **GOVERNING LAW** This agreement shall be governed by, and construed according to, the domestic laws of the state in which the equipment is located.

17. **LIMITATION OF LIABILITY** To the extent permitted by Law, in no event shall Authorized Service Provider be liable to Customer for any special, incidental, consequential, or indirect damages, loss of business profits, business interruption, loss of business information arising out of the inability to use the Equipment. The Customer acknowledges that the Maintenance provided by Authorized Service Provider is for the mechanical maintenance of the Equipment only, and that this Agreement does not cover any software, networking or any other connectivity or functionality maintenance, services, or support.

18. **FORCE MAJEURE** Authorized Service Provider shall not be liable to Customer for any failure or delay caused by events beyond Authorized Service Provider's control, including, without limitation, Customer's failure to furnish necessary information; sabotage; failure or delays in transportation or communication; boycotts; embargoes; failures or substitutions of equipment; labor disputes; accidents; shortages of labor, fuel, raw materials, machinery, or equipment; technical failures; fire; storm; flood; earthquake; explosion; acts of the public enemy; war; insurrection; riot; public disorder; epidemic; quarantine restrictions; acts of God; acts of any government or any quasi-governmental authority, instrumentality or agency.

19. **INSURANCE** If the Customer is leasing the equipment, the Customer shall obtain and maintain, at its own expense, insurance relating to claims for injury and/or property damage (including commercial general liability insurance) based on its use of the equipment, goods and machinery. Customer's insurance shall provide coverage on a primary and noncontributory basis.

20. **MISCELLANEOUS** Customer is advised to contact Authorized Service Provider prior to updating or changing any application software or operating system. Additional loading of other drivers, utilities, security updates, anti-virus, or other programs to existing workstations/servers that causes Authorized Service Provider supported products to malfunction is not covered under this Agreement and will be billed at the current hourly rate. It is the responsibility of the client to perform all necessary backups on the PC or Network prior to any installation or update. Authorized Service Provider bears no responsibility for any damages, data or productivity loss from said PC or Network Devices. Derivative Works: Customer shall not (i) modify, copy or create derivative works based on any Authorized Service Provider Software: (ii) frame or mirror any content forming part of the Software or Services, other than on Customer's own intranets or otherwise for its own internal business purposes; (iii) reverse engineer the Authorized Service Provider Software. Solution integration with print output devices covered under this or another agreement may be affected by existing Customer software, configuration changes or other

DocuSign Envelope ID: CE9EDE21-548B-4156-BDF8-8383A0FC97D0

network environment issues. Authorized Service Provider reserves the right to assess additional charges to resolve complex integration issues, including situations where the solution was initially provided by Authorized Service Provider.

21. **LEGACY EQUIPMENT** For Legacy Equipment which is not previously under a continuous maintenance agreement, Authorized Service Provider may need to confirm the Equipment is in good working condition before establishing a Maintenance Agreement. Equipment inspection may be required to bring the Equipment to proper operating standards. The labor and parts associated will be billed based upon a quote which will be provided to the Customer for approval before work begins. Maintenance rates for equipment installed less than 5 years will not exceed the Master Agreement pricing. For devices installed more than 5 years, pricing will not exceed 120% of the Master Agreement pricing.

# ATTACHMENT 3 – SHARP SAMPLE MPS STATEMENT OF WORK

| | | | |
|---|---|---|---|
| **Agency/Customer:** | | **Contractor:** | |
| **Contact Name:** | | **Contact Name:** | |
| **Address:** | | **Address:** | |
| **Email:** | | **Email:** | |
| **Phone:** | | **Phone:** | |
| **Fax:** | | **Fax:** | |
| | | **Contractor website:** | |
| **Print Assessment Date:** | | **Period of Performance:** | |

| **Statement of Work must incorporate the following documents:** | |
|---|---|
| NASPO ValuePoint Master Agreement # _____ | *[Imbed document here]* |
| Participating Addendum # _____ | *[Imbed document here]* |
| Contractor's Print Assessment | *[Imbed document here]* |

**Statement of Work, at a minimum, must include the following elements:**

1. **Introduction:**
   *Describe your current environment. What is your inventory, including owned, rented, or leased Devices*

2. **Scope:**
   *Include Project scope (i.e. single-function, multi-function printers etc.) and software*

3. **Out of Scope:**
   *This Project does not cover the following functions or deliverables:*

4. **Objective:**
   *The main objective of this project is:*
   *System and procedures will be set up to allow:*

5. **Location:**
   *Enter all physical locations of where work will be performed*

6. **Discovery/Assessment**:
   *Contractor will be required to discover/assess Purchasing Entity print environment as described below:*

   ***Deliverables:***
   *Describe the deliverables for Discovery/Assessment*

   ***Checkpoints:***
   *Describe the checkpoints for Discovery/Assessment*

7. **Data Security**
   *Include description of data security requirements*

8. **Data Breach**
   *Describe any data breach requirements*

9. **Equipment Guarantees**
   *Describe downtime, on-site service, response time etc. (**Note:** this section must, at a minimum, adhere to the same requirements as outlined in the Master Agreement and/or Participating Addendum)*

10. **End of Life/Equipment replacement**
    *Insert description of end of life/equipment replacement process*

11. **Implementation**:
    ***Deliverables:***
    *Describe the deliverables for Implementation*

    ***Checkpoints:***
    *Describe the checkpoints for Implementation*

    ***User Acceptance Testing:***
    *Describe User Acceptance Testing for Implementation*

    ***Production Rollout:***
    *Describe the Production Rollout for Implementation*

12. **Contractor Staff and Support**
    *Describe Contractor staff roles and their availability*

13. **Purchasing Entity Roles and Responsibilities**
    *Insert description of Purchasing Entity Roles and Responsibilities including:*

    ***Contacts:***
    Project Manager
    End-User Representative
    System Administrator
    Technical Support

    ***General and Technical Responsibilities:***
    *Insert description of Purchasing Entity Roles and Responsibilities*

**14. Performance Penalties**

*Insert description of Contractor Performance Penalties*

**15. Payment**

*Describe billing cycles and invoice information*

This Agreement is entered into by and between the *[Purchasing Entity]*, located at *[Agency address]* and *[Contractor]* licensed to conduct business in the State of _____ ("Contractor"), located at *[Contractor address]* for the purpose of providing *Managed Print Services.*

The signatories to this Managed Print Services Agreement represent that they have the authority to bind their respective organizations to this Agreement.

***In Witness Whereof***, the parties hereto, having read this Managed Print Services Agreement in its entirety, including all attachments, have executed this Agreement.

This Agreement is effective this _____day of _____, 2___.
Initial term of this Agreement is _____ year(s) or until _____.
Maximum term of this Agreement is five (5) years, or until _____.

| | | | |
|---|---|---|---|
| Contractor Signature | Date | Purchasing Entity Signature | Date |
| | | | |
| Contractor Printed Name, Title | | Purchasing Entity Printed Name, Title | |

# STATE OF CALIFORNIA
# PARTICIPATING ADDENDUM NUMBER 7-24-70-46-07

Multi-Function Devices and Related Software, Services, and Cloud Solutions
Colorado NASPO ValuePoint Master Agreement Number 188627
**Sharp Electronics Corporation (Contractor)**

This Participating Addendum Number 7-24-70-46-07 is entered into between the State of California, Department of General Services (hereafter referred to as "State" or "DGS") and Sharp Electronics Corporation (hereafter referred to as "Contractor") under the lead state of Colorado NASPO ValuePoint Master Agreement Number 188627.

## 1. SCOPE

A. This Participating Addendum covers the purchase of Multi-Function Devices and Related Software, Services, and Cloud Solutions under the Colorado NASPO ValuePoint Master Agreement. The Colorado NASPO ValuePoint Master Agreement is hereby incorporated by reference. Product/service categories included under this Participating Addendum are identified in Section 5 (Available Products and Services).

B. This Participating Addendum is available for use by California state agencies and local governments. A local government is defined as any city, county, city and county, district, or other local governmental body, school district or corporation empowered to expend public funds. The State Agency Listing (https://www.ca.gov/agenciesall/) provides a comprehensive list of state agencies.

C. Each local government is to make its own determination whether this Participating Addendum and the Colorado NASPO ValuePoint Master Agreement are consistent with its procurement policies and regulations.

## 2. TERM

A. The term of this Participating Addendum shall begin August 1, 2024, or upon signature approval by the State whichever occurs later, and will end July 31, 2026, or upon termination by the State, whichever occurs first.

B. Lead state amendments to extend the NASPO ValuePoint Master Agreement term date are not automatically incorporated into this Participating Addendum. Extension(s) to the term of this Participating Addendum will be through a written amendment upon mutual agreement between the State and the Contractor.

C. Order placement and execution shall be on or before the expiration of this Participating Addendum. However, delivery of products or completion of services may be up to 120 days after the Participating Addendum expiration date.

## 3. TERMS AND CONDITIONS/INCORPORATION OF DOCUMENTS

A. Terms and conditions listed below are hereby incorporated by reference and made a part of this Participating Addendum as if attached herein and shall apply to the purchase of goods or services made under this Participating Addendum.

1) General Provisions – Information Technology (DGS PD-401 IT), effective 6/21/2022
2) General Provisions – Information Technology – Cloud Computing – Software as a Service (SaaS), effective 6/21/2022
3) Cloud Computing Special Provisions for Software as a Service (SaaS), effective 03/15/2018.

B. Terms can be viewed on the DGS Procurement Division website (https://www.dgs.ca.gov/PD/Resources/Page-Content/Procurement-Division-Resources-List-Folder/Required-Language-for-Solicitations-and-Contracts).

## 4. ORDER OF PRECEDENCE

A. In the event of any inconsistency between the articles, attachments, or provisions which constitute this agreement, the following descending order of precedence shall apply:

1) California Participating Addendum Number 7-24-70-46-07
2) Colorado NASPO ValuePoint Master Agreement Number 188627

## 5. AVAILABLE PRODUCTS AND SERVICES

A. The following product and service offerings from the Colorado NASPO ValuePoint Master Agreement Number 188627 are allowed under this Participating Addendum:

Products and Services:

- Group A – Multi-Function Devices, A3 – OEM only
- Group B – A4 Multi-Function Devices – OEM and Non-OEM
- Group D – Single-function Printers – OEM and Non-OEM
- Group F – Scanners – OEM and Non-OEM
- Group G – Software – OEM and Non-OEM
- Group H – Consumable Supplies – OEM and Non-OEM
- Group I – Managed Print Services
- Sub-Group G1 – Software Related Services
- Sub-Group D1 - Specialty Printers (3D, receipt, barcode label, card, cable) – OEM and Non-OEM

## 6. RESTRICTIONS/DISALLOWED PRODUCTS AND SERVICES (STATE AGENCIES ONLY)

A. The following restrictions apply to state agency purchases under this Participating Addendum:

1) Leasing and Rental

2) Products:
   a) Remanufactured Equipment
   b) Imaging equipment that is not Energy Star certified
   c) Software containing “click wrap” agreements
   d) Not Specifically Priced (NSP) items not listed or priced in the NASPO ValuePoint Master Agreement Price Lists

3) Services:
   a) Mail Room Services
   b) Network and Data Security
   c) Records Management

B. Product and service categories that are available on mandatory California statewide contracts cannot be purchased from this Participating Addendum by state agencies without an exemption. State agencies are responsible for obtaining a mandatory statewide contract exemption from DGS prior to issuing a purchase order.

## 7. PRICING

A. Contractor’s pricing is outlined in the Colorado NASPO ValuePoint Master Agreement Number 188627.

B. Contractor shall notify the State Contract Administrator of any amendments and pricing adjustments approved and executed by the state of Colorado.

## 8. AUTHORIZED RESELLERS

A. Contractor may use State-approved Authorized Resellers under this Participating Addendum for sales and service functions as defined herein.

1) Authorized Resellers must accept purchase orders and accept payment from ordering agencies for products and services offered under this Participating Addendum.

2) Authorized Resellers are responsible for sending a copy of all purchase orders and invoices to the Contractor for compliance with quarterly usage reporting and administrative fee requirements.

3) All purchase documents to Authorized Resellers shall reference the Participating Addendum Number and Contractor Name.

B. Contractor shall be responsible for successful performance and compliance with all requirements in accordance with the terms and conditions under this Participating Addendum, even if work is performed by Authorized Resellers. All State policies, guidelines, and requirements shall apply to Authorized Resellers.

C. Contractor will be the sole point of contact with regard to Participating Addendum contractual matters, reporting, and administrative fee requirements.

D. Subject to the approval of the State, Authorized Resellers may be added on a quarterly basis during the term of the Participating Addendum. Contractors shall notify the State in writing of any deleted Authorized Resellers or changes to current Authorized Resellers' information at any time.

E. Contractor will be required to submit Authorized Reseller requests, in a format specified by the State, to the State Contract Administrator for approval.

F. State-approved Authorized Resellers will be posted on the State's Cal eProcure website.

## 9. SUBCONTRACTORS

Subcontractors will not be used for this Participating Addendum.

## 10. ORDERING AGENCY RESPONSIBILITIES

A. State agency and local government use of this Participating Addendum is optional.

B. State agencies and local governments must follow the ordering procedures outlined within the User Instructions guide, administered by the State Contract Administrator, to execute orders against this Participating Addendum. User Instructions are posted on the State's Cal eProcure website.

C. All purchase orders executed under this Participating Addendum shall include the Participating Addendum Number 7-24-70-46-07.

## 11. STATE AGENCY BUY RECYCLED CAMPAIGN (SABRC)

A. State agencies are required to report purchases made within the eleven product categories in the California Department of Resources Recycling and Recovery's State Agency Buy Recycled Campaign (SABRC) per Public Contract Code sections 12200-12217.

B. Contractor will be required to complete and return a Postconsumer Recycled-Content Certification form (https://calrecycle.ca.gov/buyrecycled/stateagency/vendored/form74guide/) upon request by the state agency.

## 12. DELIVERY

A. Delivery shall occur within thirty (30) days after receipt of order, or as negotiated between ordering agency and Contractor and included in the purchase order, or as otherwise stipulated in the NASPO ValuePoint Master Agreement.

B. Free On Board (F.O.B.) Destination, freight prepaid by the Contractor, to the ordering agency's receiving point.

## 13. INVOICING AND PAYMENT

A. Payment will be made in accordance with General Provisions – Information Technology Paragraph 30 (Required Payment Date).

B. Invoices shall be sent to the address identified in the ordering agency's purchase order. The Participating Addendum Number and ordering agency purchase order number shall appear on each invoice for all purchases placed under this Participating Addendum.

C. Contractor will accept the State of California credit card (CAL-Card) for payment of invoices.

## 14. USAGE REPORTING

A. Contractor shall submit usage reports on a quarterly basis to the State Contract Administrator for all California entity purchases using the report template attached hereto as Attachment A. The report is due even when there is no activity.

B. The State Contract Administrator reserves the right to modify Attachment A and require Contractor to provide additional order information during the course of this Participating Addendum.

C. The report shall be an Excel spreadsheet transmitted electronically to the DGS Cooperatives mailbox (PDCooperatives@dgs.ca.gov).

D. Any report that does not follow the required format or that excludes information will be deemed incomplete. Contractor will be responsible for submitting corrected reports within five (5) business days of the date of written notification from the State.

E. Tax must not be included in the report, even if it is on the purchase order.

F. Reports are due for each quarter as follows:

| Reporting Period | Due Date |
|---|---|
| January 1 to March 31 | April 30 |
| April 1 to June 30 | July 31 |
| July 1 to September 30 | October 31 |
| October 1 to December 31 | January 31 |

G. Failure to meet reporting requirements and submit the reports on a timely basis shall constitute grounds for suspension of this Participating Addendum.

H. Time extensions may be approved only if all due reports have been submitted to the State.

## 15. ADMINISTRATIVE FEE

A. Contractor is required to remit to DGS an administrative fee amount equal to 1.25% of the sales for the quarterly reporting period less freight, taxes, returned products and credits. (For example, if the net sales for the reporting quarter totals $100,000.00, the incentive fee due to DGS would be $1,250.00.)

B. The administrative fee shall not be included as an adjustment to Contractor's NASPO ValuePoint Master Agreement pricing.

C. The administrative fee shall not be invoiced or charged to the ordering agency.

D. Payment of the administrative fee is due irrespective of payment status from ordering agencies.

E. Payment may be made in the form of an electronic payment using the LPA Payment Portal website (https://www.dgs.ca.gov/PD/Services/Page-Content/Procurement-Division-Services-List-Folder/Access-LPA-Payment-Portal) or by submitting a check payable to the State of California, Department of General Services.

F. Administrative fee payments made by check must include the Participating Addendum Number on the check and be submitted to the following address:

Department of General Services
Procurement Division
Attn: MAPS Payment Processing
707 Third Street, 2nd Floor
West Sacramento, CA 95605

G. Administrative fee payments are due for each quarter as follows:

| Reporting Period | Due Date |
|---|---|
| January 1 to March 31 | April 30 |
| April 1 to June 30 | July 31 |
| July 1 to September 30 | October 31 |
| October 1 to December 31 | January 31 |

H. Failure to meet administrative fee requirements and submit fees on a timely basis shall constitute grounds for suspension of this Participating Addendum.

## 16. CONTRACT MANAGEMENT

A. The primary Contractor Contract Manager for this Participating Addendum shall be as follows:

| Contractor | Contract Manager |
|---|---|
| Name: | Sharp Electronics Corporation |
| Phone: | (714) 371-8214 |
| Email | williamsau@sharpsec.com |

| Contractor | Contract Manager |
|---|---|
| Address: | Sharp Electronics Corporation<br>Attn: Laurie Williams<br>100 Paragon Drive<br>Montvale, NJ 07645address> |

B. The State Contract Administrator for this Participating Addendum shall be as follows:

| State | Contract Administrator |
|---|---|
| Name: | Yolanda Tutt |
| Phone: | (279) 946-8401 |
| Email | yolanda.tutt@dgs.ca.gov |
| Address: | State of California<br>Department of General Services<br>Procurement Division<br>707 Third Street, 2nd Floor, MS 2-202<br>West Sacramento, CA 95605 |

C. Should the contact information for either party change, the party will provide written notice with updated information no later than ten (10) business days after the change.

## 17. TERMINATION OF AGREEMENT

The State may terminate this Participating Addendum at any time upon thirty (30) days prior written notice to the Contractor. Upon termination or other expiration of this Participating Addendum, each party will assist the other party in orderly termination of the Participating Addendum and the transfer of all assets, tangible, and intangible, as may facilitate the orderly, non-disrupted business continuation of each party. This provision shall not relieve the Contractor of the obligation to perform under any purchase order or other similar ordering document executed prior to the termination becoming effective.

## 18. AMENDMENT

No amendment or variation of the terms of this Participating Addendum shall be valid unless made in writing, signed by the parties, and approved as required. No oral understanding or agreement not incorporated in the Participating Addendum is binding on any of the parties.

## 19. NEWS RELEASES

Unless otherwise exempted, news releases, endorsements, advertising, and social media content pertaining to this Participating Addendum shall not be made without prior written approval from the State.

## 20. EXECUTIVE ORDER N-6-22 – RUSSIA SANCTIONS

On March 4, 2022, Governor Gavin Newsom issued Executive Order N-6-22 (the EO) regarding Economic Sanctions against Russia and Russian entities and individuals. “Economic Sanctions” refers to sanctions imposed by the U.S. government in response to Russia’s actions in Ukraine, as well as any sanctions imposed under state law. The EO directs state agencies to terminate contracts with, and to refrain from entering any new contracts with, individuals or entities that are determined to be a target of Economic Sanctions. Accordingly, should the State determine Contractor is a target of Economic Sanctions or is conducting prohibited transactions with sanctioned individuals or entities, that shall be grounds for termination of this Participating Addendum. The State shall provide Contractor advance written notice of such termination, allowing Contractor at least thirty (30) calendar days to provide a written response. Termination shall be at the sole discretion of the State.

## 21. GENERATIVE ARTIFICIAL INTELLIGENCE (GENAI) REPORTING

The State of California seeks to realize the potential benefits of GenAI, through the development and deployment of GenAI tools, while balancing the risks of these new technologies.

Upon request by an ordering agency, Contractor must complete a GenAI Reporting and Fact Sheet (STD 1000) to identify if their solution or service includes, or makes available, any GenAI including, GenAI from third parties or subcontractors.

During the term of the contract, Contractor must notify the State in writing if their services or any work under this contract includes, or makes available, any previously unreported GenAI technology, including GenAI from third parties or subcontractors. Contractor shall immediately complete the GenAI Reporting and Factsheet (STD 1000) to notify the State of any new or previously unreported GenAI technology.

At the direction of the State, Contractor shall discontinue the use of any new or previously undisclosed GenAI technology that materially impacts functionality, risk or

contract performance, until use of such GenAI technology has been approved by the State.

Failure to disclose GenAI use to the State and submit the GenAI Reporting and Factsheet (STD 1000) may be considered a breach of the contract by the State at its sole discretion and the State may consider such failure to disclose GenAI and/or failure to submit the GenAI Reporting and Factsheet (STD 1000) as grounds for the immediate termination of the contract. The State is entitled to seek any and all relief to which it may be entitled to as a result of such non-disclosure.

The State reserves the right to amend the contract, without additional cost, to incorporate GenAI Special Provisions into the contract at its sole discretion and/or terminate any contract that presents an unacceptable level of risk to the State.

If Contractor identifies GenAI in their solution, a copy of the STD 1000 must be submitted to the State Contract Administrator.

## 22. AGREEMENT

A. This Participating Addendum and the Master Agreement together with its exhibits and/or amendments, set forth the entire agreement between the parties with respect to the subject matter of all previous communications, representations, or agreements, whether oral or written, with respect to the subject matter hereof. Terms and conditions inconsistent with, contrary or in addition to the terms and conditions of this Participating Addendum and the Master Agreement, together with its exhibits and/or amendments, shall not be added to or incorporated into this Participating Addendum or the Master Agreement and its exhibits and/or amendments, by any subsequent purchase order or otherwise, and any such attempts to add or incorporate such terms and conditions are hereby rejected. The terms and conditions of this Participating Addendum and the Master Agreement and its exhibits and/or amendments shall prevail and govern in the case of any such inconsistent or additional terms.

B. By signing this Participating Addendum, Contractor agrees to offer the same products/services available on the Colorado NASPO ValuePoint Master Agreement Number 188627 at prices equal to or lower than the prices on that agreement.

IN WITNESS WHEREOF, the parties have executed this Participating Addendum as of the date of execution by both parties below.

| **STATE OF CALIFORNIA** | **CONTRACTOR** |
|---|---|
| Department of General Services | Sharp Electronics Corporation |
| *Agency Name* | *Contractor Name* |
| Julie Matthews Digitally signed by Julie Matthews Date: 2024.08.01 10:20:47 -07'00' 8/1/2024 | Mike Marusic 7/31/2024 |
| *Authorized Signature* *Date Signed* | *Authorized Signature* *Date Signed* |
| Julie Matthews, MAU2 Supervisor | Mike Marusic |
| *Printed Name/Title of Person Signing* | *Printed Name/Title of Person Signing* |
| 707 Third Street<br>West Sacramento, CA 95605 | 100 Paragon Drive<br>Montvale, NJ 07645 |
| *Address* | *Address* |

SHARP

# MPS STATEMENT OF WORK

| | | | |
|---|---|---|---|
| **Agency/Customer:** | City of Redlands | **Contractor:** | Burtronics Business Systems |
| **Contact Name:** | Eric Owens | **Contact Name:** | Randolph Hlebasko |
| **Address:** | 35 Cajon St. | **Address:** | 290 West Orange Show Rd., #101 |
| **Email:** | registrationdoit@cityofredlands.org | **Email:** | info@burtronics.com |
| **Phone:** | 909-335-4795 | **Phone:** | 800-523-0822 |
| **Fax:** | - | **Fax:** | - |
| | | **Contractor website:** | www.burtronics.com |
| **Print Assessment Date:** | TBD- See Section 6. | **Period of Performance:** | 09/16/25-09/15/28<br>Option: 09/16/28-09/15/29 |

| **Statement of Work must incorporate the following documents:** | |
|---|---|
| NASPO ValuePoint Master Agreement # 188627 | *Please see Attached* |
| Participating Addendum # 7-24-70-46-07 | *Please see Attached* |
| Contractor's Print Assessment | TBD- See Section 6. |

1. **Introduction:**
   This agreement is for the provision of copier, printer and managed printer services between the City of Redlands, a municipal corporation (Hereinafter "City"), and Burtronics Business Systems (Hereinafter "Contractor").

2. **Scope:**

   The City hereby engages Contractor to provide copier, printer and managed printer services for City that will include the following business capability requirements:

   A. Multi-Function Devices (MFD)

   a. Contractor shall provide equipment to meet the City's business requirements for printing, copying, scanning, and faxing.

   b. Contractor shall provide maintenance and repair support for new installations.

B. Supplies and Consumables

a. Contractor shall supply all consumables required for image creation including toner cartridges, developer, waste toner bottles, staples, and maintenance kits for all new installations and for the existing fleet of MFDs.

b. Contractor shall have a consumable ordering and management process approved by the City.

c. All supplies must be OEM or City pre-approved compatible cartridges. If the City is not satisfied with any compatible cartridge performance, the contractor shall replace the cartridge and going forward, only supply OEM cartridges for that device at no additional charge.

C. Software

a. In addition to dispatching technicians on-site, Contractor shall remotely monitor and support the equipment to ensure timely and accurate resolution of problems.

b. The City will install Contractor provided or Manufacturer Designated Device Monitoring Software that will automatically gather and send Meter Readings to Contractor Biling Department on a Pre-Scheduled Basis.

c. Contractor shall supply and support software for scanning, usage tracking, and fleet monitoring (including fax and scan usage, number of scans, frequence of paper size types used, etc.).

d. Fleet Management software shall have the ability for client log in with access to reports and features.

D. Administration

a. Existing MFD/Printer Support & Services

1. Contractor shall work with the City to manage the retirement and refresh of equipment on the City's existing devices as shown in Exhibit "A", titled "City of Redlands-MFD FLEET LIST".

2. Contractor may optionally provide an alternate solution to the management of existing (Keep / Cover) devices. The solution must provide overall cost savings while meeting the technology needs of the department.

b. Asset Management / Meter Usage Readings Software

1. The Contractor shall be solely responsible for obtaining and furnishing meter counts for all equipment on a monthly or quarterly basis, as required by the IT department. Meter counts shall be accomplished without staff intervention or inconvenience and at no additional cost to the City.

2. Estimating of Meters is not allowed.

3. The City desires an on-line tool that allows for bi-directional data sharing

of device location updates, location contact information and IMACD changes.

c. Billing

1. Billing must allow for customizable fields per device for department codes, contact person, contact number, device location address and other criteria. The usage report submitted for billing must match with the monthly invoice.

2. Each department shall receive a summary invoice for all departmental costs monthly. Method of delivery shall be determined with the selected Contractor.

3. Estimating of meter usage for billing will not be allowed.

4. All usage charges are to be billed in arrears and no base allowance or volume guarantee shall be included in any department order.

5. On a Quarterly basis, a Citywide billing and usage report shall be generated to reflect each department total devices, lease and/or usage charges for the previous quarter and actual saving achieved. The report shall sub-total each department with a citywide roll-up of total costs.

d. Asset Management

1. Contractor shall update the City whenever an Install, Move, Add, Change, Decommissioning Request, or break/fix incident as request.

2. Contractor shall provide certification for the wipe of hard drives or take other appropriate action prior to Move, Add, Change, or Decommissioning of Contractor installed equipment.

3. Contractor shall contact the IT Department to schedule the install or removal of any MFD and work within the approved security protocols.

4. The Contractor shall provide the ability to view invoices on-line via a secure customer portal at no additional cost to the City.

5. The Contractor shall provide an asset Management Portal that allows the City to see their inventory real time.

E. Services

a. Contractor shall Install, Move, Add Change, and Decommission (IMACD) all in-scope MFD's

1. Install—Contractor shall perform the delivery, setup, and connection of equipment.

2. Move — Contractor shall re-locate an existing device from one physical

location to another physical location, reconnect and ensure machine is functioning properly.

3. Add—Contractor shall add a hardware or software component to an existing device.

4. Change—Contractor shall modify an existing configuration within an installed device.

5. Decommission—Contractor shall provide decommissioning and preparation for return of equipment.

6. Contractor shall insure that all data on MFD hard drives is wiped upon removal from City locations.

7. Contractor shall wipe hard drives or take other appropriate action as approved by the City prior to Move, Add, Change, or Install of any contractor installed in-scope hardware.

b. Remote fleet monitoring and management.

1. Contractor shall use monitoring tools for print device usage tracking and to aid in fleet optimization.

2. Provide the City with portal access to view inventory and location status real time.

c. Contractor shall provide end user training on equipment.

1. For new MFD Contractor shall coordinate/schedule onsite training with the City's department end users.

2. Contractor shall provide follow-up training, as needed at no additional cost.

3. Contractor shall supply other types of training resources such as web based training, job aids, support documentation, and self-help resources.

d. Contractor shall provide ongoing fleet optimization.

1. Contractor shall use monitoring tools, site assessments, new technologies, and other resources to initially assess the City of Redlands print environment and finalize recommendations to optimize the print environment.

2. Contractor shall monitor the fleet in order to seek optimization opportunities on a quarterly basis

**3. Out of Scope:**

A. Plotters and Canon devices are not covered under this agreement. All devices that are added to this contract will need to be approved by the Contractor and The City of Redlands.
B. Preparing and shipping lease return equipment back to the finance company is not included, but the service fee is included on the MPS Pricing Worksheet for equipment preparation for shipping.

C. Networking and software support is not included outside of the Statement of Work.

D. Equipment disposal is not covered under this agreement, but rates for disposal are included in the MPS Pricing Worksheet (Exhibit "B").

**4. Objective:**

To establish an agreement for the provision of certain hardware, on-demand supply replacement and on-site technician services for copier and printing equipment between Burtronics Business Systems and the City of Redlands.

**5. Location:**

The locations of the MFDs in the City of Redlands where all work is to be performed, and supplies are to be sent are listed in Exhibit "A"- City of Redlands- MFD FLEET List.

**6. Discovery/Assessment**:

Contractor shall work with city staff and/or contractor's team to perform a site assessment at each of the participating City departments to validate and document the MFD/printer device inventory and to facilitate equipment optimization after the effective date of the agreement but pre-implementation.

**7. Data Security**

**A.** Configuration Management

a. The MFD system shall be configured to provide only essential capabilities, and to restrict the ability to access and change MFD settings such as double-sided printing, default black and white printing, etc.

b. Unnecessary ports, protocols, functions and services shall be disabled. MFD settings shall be set for printing from a selected set of IP addresses.

c. Selected Contractor shall ensure that MFDs are compatible with all existing and future City utilized applications.

B. Maintenance

a. The Contractor shall be responsible for implementing a security patch management program within the City's policies/practices for implementation.

b. Authentication and authorization methods are required for remote maintenance and diagnostic sessions. Remote maintenance and diagnostic activities shall be documented.

c. Remote maintenance and diagnostic activities shall be authorized, monitored, and approved by the City.

d. Only authorized maintenance personnel shall perform information system maintenance.

**8. Data Breach**

A. Contractor will be responsible for wiping hard drives as described in the Statement of Work prior to disposal or replacement of equipment on the MPS Fleet Agreement.

B. The City of Redlands will be responsible for their network and not the Contractor.

**9. Equipment Guarantees**

**A.** Contractor shall provide all services included in the MPS Statement work specifically in Section 10.

**10. Customer Support/Maintenance**

Contractor shall provide maintenance service calls during the City of Redlands working hours, Monday through Friday, 8:00 a.m. to 5:00 p.m. (PST), excluding the City of Redlands holidays. Under certain special circumstances, the Contractor may be requested to provide support outside of regular business hours.

Contractor shall provide full coverage maintenance on all parts, service calls, and scheduled preventative maintenance calls at frequencies defined in the Manufacturer's specifications.

A. Customer Support

a. The Contractor shall provide a live person, toll-free phone line to place service calls, order parts and supplies, as well as to provide technical support at no additional cost to the City.

b. The Contractor shall, at no additional cost, respond to all emergency service requests within two (2) hours and begin repairs within four (4) hours unless other arrangements are made.

c. The Contractor shall, at no additional cost, have a 24-hour toll-free phone support line for hardware and software issues, as well as available on-site technical support, Monday through Friday, 8:00 a.m. to 5:00 p.m. (PST).

d. If Contractor requires a machine to be removed from the City's premises for repair, Contractor shall provide end users with a loaner machine of similar functionality for use during the period of the repair.

e. Contractor shall be responsible for the work performed by any and all sub-contractors engaged by Contractor in support of the award of this contract, and persons directly or indirectly employed by third parties.

B. Service Level Requirements

a. Maintenance – Contractor shall provide full coverage maintenance on all contracted equipment including, but not limited to, parts, service calls, and scheduled preventative maintenance support. The Contractor's helpdesk will take all support calls and offer assistance over the phone via the Contractor's remote diagnostic capabilities to get the City up and running quickly. Should an on- site technician be needed, an estimated time of arrival (ETA) shall be provided with a courtesy follow up via phone.

b. Service Loaner – If the main copy/print engine is deemed inoperable and Manufacturer authorized service personnel is unable to correct the problem within sixteen (16) working hours, the City may request a loaner of similar or upgraded features until the main copy/print engine is repaired at no additional cost to the City.

c. Minimum Service Response Times / Uptime Guarantee

Contractor shall meet or exceed industry standards in response, repair, up, and down times as defined in the section below.

1. Response Time Four (4) Hours Maximum (emergency service requests)

2. Repair Time Two (2) hours average

3. Minimum Uptime 98%

4. Maximum Downtime 2%

5. Response Time - Time measured from logging of service call until technician arrives on scene or clears by phone.

6. Repair Time - Time required for a technician to troubleshoot, diagnose, and repair a copier measured from arrival on the scene to completion of call. This does not include time required for shipment of certain parts.

7. Minimum Uptime - Percentage of time machine is available for basic operation in comparison to hours of operation as determined by the City.

8. Maximum Downtime - Percentage of time machine is unavailable for basic operation in comparison to the hours of operation as determined by the City.

9. Emergency Service Request – Request for service when any of the three (3) main functions is in operable. (Copy/Print/Fax) excludes preventative maintenance calls.

d. User Uptime

| **User Uptime** | **Minimum Acceptable Level** | **Objective** |
|---|---|---|
| Percent of time users must be able to print, copy, fax, and scan to print devices | 98% | The City of Redlands's business and operational uptime requirement. Measured monthly. |

1. Users must be able to print, copy, fax, and scan to the City's print devices 98% of the time.

2. Compliance is confirmed by service request and problem resolution records to determine when users are down without both their main and backup devices for print, copy, fax, and scan.

e. Uptime Guarantee- Contractor maintenance procedures shall be designed to average up to a 98% uptime; however, in the event the mainframe provided is not operational (excluding preventive maintenance and operator preventable calls) during any 60-day period, Contractor will provide a loaner of similar and upgraded features until the mainframe is repaired at no additional cost to the City.

f. Replacement Guarantee- If the contracted contractor is unable to repair a problem, the Contractor shall, at the City's request, replace it without charge with an identical model or. At the option of manufacturer, with a machine with comparable features and capabilities. The replacement device shall not be a model older than the device being replaced.

g. Replenishment/Replacement of Supplies

1. Supplies shall be received within (2) two working days of a low toner alert, with a full supply set per printer always stored on-site or as agreed by the departments

2. Contractor shall work with each of the 18 departments to determine a location and methodology for storing and restocking back up toner on-site at the City.

3. Contractor will provide a documented process for each department and include the written process in the quarterly review process.

h. Dispatched Repair Service

1. Per industry standards, a certified technician shall arrive on-site within (4) four hours of service call being dispatched to Contractor 98% of the time.

a. Response time is measured from the logging of a service call until the technician arrives at the City department or resolved by phone.

b. Repair time is the time required for a technician to troubleshoot, diagnose and repair a machine measured from the arrival at the City department to completion of the call.

2. Repair SLA's

a. 50% of Print Devices are resolved within six (6) hours or less

b. 95% of Print Devices incidents are resolved within 24 hours

c. 100% of Print Devices incidents are resolved within 48 hours

3. A service call module on a customer portal that allows City administrators to see the status of open and closed service requests within three (3) hours.

4. Compliance is demonstrated by Contractor's date-stamped records of service call requests and resolutions. The record shall clearly state when the on-site response took place, when the request was resolved, and when the ticket closed with a satisfactory resolution. The City may review compliance quarterly.

i. Preventative Maintenance for Copier Based MFDs

1. The Contractor shall provide preventative maintenance / cleaning of the contracted Copier/MFD fleet to meet the PM schedule mandated by the manufacturer to include at minimum the following requirements:

a. The PM/Cleaning call shall include at minimum the following:

b. Cleaning the Paper Path.

c. Cleaning Rollers.

d. Clean the Copy Glass

e. Clean and Vacuum inside the paper trays.

f. Wipe down the exterior of the device.

k. Billing

1. The billing shall be complete, accurate, on time, and easily audited.

2. Errors must not exceed 2% of the devices billed and the itemized errors and corrections shall be received within twenty (20) calendar days after the end of the following month.

3. The City and the Contractor will agree on what information the invoice will contain, the billing process between both parties, and how it will be formatted.

4. Contractor shall provide the City with usage and billing statistics quarterly and/or upon request by City staff or designee.

## 11. Contractor Reporting & Communication Requirements

A. Quarterly and Annual Account Reviews

Upon request, Contractor shall conduct an in-person Quarterly Business Reviews (QBRs) with all departments and City staff or designee to discuss the status of the fleet. At a minimum, Contractor shall communicate with each department's Administrative Officer once per year. A Citywide account review shall be conducted annually with IT Management to validate cost savings, project milestones, and projections for the following year.

On a quarterly basis, Contractor shall provide electronic reporting related to the activities in this SOW with

the following categories and types of reports:

a. Department printing volumes broken out by color and black & white per device;

b. Number and types of devices in the fleet summarized by department and citywide;

c. Pro-Active over- and under-utilized equipment optimization/swaps;

d. Break/Fix volume of calls;

e. Knowledge Management information and/or support that will benefit the City's end users and internal support teams;

f. A list of devices that experienced multiple repairs in the previous quarter, or re-occurring over a 180-day period, along with an action plan/recommendation for permanent correction;

g. Ongoing continuous improvement relative to print throughout the entire City environment;

h. Billing Reports;

i. SLA Achievement Reports; and

j. Status of any additional projects.

These reports shall be made available in an electronic format to the Technology & Innovation and participating Departments quarterly or as requested.

B. General Communication Obligations

a. Contractor shall provide the City with ninety (90) days' advance notice of any new models of equipment or software proposed to replace end-of-life equipment or software.

b. Any new equipment or software proposed for deployment on the City's network shall be subject to prior testing and approval by City staff. Hardware demonstrations may be conducted offsite.

c. All replacement device pricing shall meet the same or lower cost level of comparable or equivalent to the replacement Model capabilities, features, and accessories.

**12. End of Life/Equipment replacement**

A. Equipment on the MPS Fleet Agreement will be supported with the guaranteed SLA's and uptime as long as the equipment is supported by the manufacturer and the equipment is not considered obsolete.

B. Contractor will notify the City of Redlands when such equipment becomes obsolete and is no longer supported.

C. Replacement equipment options for purchase/lease will be provided by Contractor as needed.

**13. Implementation**:

A. Deliverables- Contractor will provide service, supplies and parts along with other services described in the Statement of Work

B. Checkpoints- Contractor will provide the following checkpoints:

a. Contract execution from both parties

b. Contractor to assign Equipment Numbers (EQ#) for all equipment being serviced under this contract

c. Contractor to be on-site on September 17, 2025 to start equipment evaluations. Evaluations will consist of inspections of the current state of the MPS Fleet. Empty/Low toner and worn parts that prevent the equipment from running properly will be discovered and brought to the City of Redlands attention to be paid by the City of Redlands within the first 30 days from the start of this agreement.

d. Contractor to provide all support contact information 3 days prior to start of the contract. This will also include the process for placing service calls.

e. FM Audit to be installed for all MPS Fleet covered under this agreement. Contractor will need to work with the City of Redlands IT/Network department to ensure all equipment is operational on FM Audit by September 30, 2025.

f. Contractor will collect current meter readings by printing out the counter sheet at the time of evaluations to secure a start meter for each unit in the MPS Fleet. This will be provided to The City of Redlands.

**14. Contractor Staff and Support**

A. Key Personnel

a. The Contractor shall provide a dedicated Customer Support Team led by a Program/Project Manager who shall have overall responsibility for all activities related to this project.

b. The Contractor shall provide an organizational chart listing the team members along with profiles of their skills, qualifications, and responsibilities.

c. Contractor shall provide the City with ten (10) days' advance notice when a Strategic Account Manager will no longer be supporting the City and schedule an introduction of any replacement personnel.

d. The City reserves the right to request a replacement of staff(s) not performing to the City's expectations.

B. Dedicated Inside Customer Service/Support Personnel

Contractor shall have an internal non-sales support staff dedicated to managing the customer relationship alongside the Sales Executive. This person shall be experienced in supporting major

account business.

Dedicated personnel shall be directly responsible for the fulfillment of all SOW and SLA commitments with the City in support of Contractor sales team and work to create and implement specific operational practices including, but not limited to:

a. Continually monitor existing service levels and compliance to SLAs.

b. Provide interface between end-users, technical support, and resources to improve/maintain customer satisfaction.

c. Act as the primary point of contact for all aspects of the contractual relationship with the customer.

d. Develop continual process improvements.

e. Work closely with Contractor operations team on implementation and deployment of print technology and support services, including inventory collection and management, and consumables management while monitoring adherence to all SLAs.

f. Facilitate quarterly/semi-annual performance reviews.

g. Resolve customer complaints and concerns by investigating problems, as well as develop solutions and manage through to resolution.

h. Provide reporting metrics and tracking data as required to fulfill SLAs.

i. Follow-through on mission critical activities identified by the Client and Internal Management**.**

C. Technical Support Personnel

a. Contractor shall be authorized by the original equipment manufacturer (OEM) to service the equipment during the entire term of the Agreement

b. Contractor's service technicians shall be OEM trained and certified during the entire term of the Agreement.

c. Contractor shall only use only OEM genuine or OEM approved parts and supplies to maintain the equipment. Contractor shall have same-day or next-day delivery for parts and supplies, with the parts delivered to the City or brought in by a service technician.

**15. Purchasing Entity Roles and Responsibilities**

City of Redlands Contacts:

Project Manager- Valerie Abrego – vabrego@cityofredlands.org

End-User Representative- Gabriela Gonzalez- ggonzalez@cityofredlands.org

System Administrator- Shane Burgos Adair- sadair@cityofredlands.org

Technical Support- Helpdesk- helpdesk@cityofredlands.org

***A. Roles and Responsibilities***

This is a summary of the City and Contractor general responsibilities and roles and does not limit additional items that may be added in the future.

1. General

1.1. Contractor will provide trained on-site or dispatched CEs to perform Onsite and Dispatched Services.

1.2. Contractor will coordinate and provide hardware Break/Fix Incident troubleshooting and resolution, and Service request support for in-scope hardware.

1.3. Contractor will manage operations within the standard Incident and Service Request fulfillment process.

1.4. Contractor will meet or exceed agreed upon service levels (SLAs).

1.5. Contractor will manage CE productivity, efficiencies, and professionalism within City offices.

1.6. Contractor will assign and schedule qualified, City focused Customer Engineers to perform support service es at City in-scope locations.

1.7 Contractor will provide accurate information regarding status, resolution, and asset updates in Contractor System.

1.8 City will provide contact information for the end-user who reports an incident or makes a request.

1.9 Contractor will perform remote diagnostics of hardware, software, application, etc., as applicable.

1.10. Contractor and City will propose process and policy improvements through Continual Service Improvement process.

1.11. City will review and approve process and policy improvements proposed by Contractor.

1.12. Contractor will ensure compliance with environmental, health, and safety requirements at all City locations.

1.13. Contractor will produce quarterly reports as described in Reporting and Communication requirements and make recommendations for improved reporting based on industry best

practices.

2. Hardware Break/Fix

2.1. Contractor will provide the City with Contractor authorization to provide services for hardware with each device manufacturer and cooperate with warranty assignment efforts.

2.2. Contractor will provide service directly or coordinate services through a contracted and City approved third party as necessary for in scope equipment and services.

2.3. Contractor will manage the warranty process and work with third parties as necessary to obtain support for hardware that is out of scope and as requested.

2.4. Contractor will schedule services with end-user and provide ETA and updates for resolution.

2.5. Contractor will provide hardware loaner for device(s) requiring removal for repair for as long as the equipment is being repaired.

2.6. Contractor will retain ownership of parts removed from equipment for repair.

2.7. Contractor will repair in-warranty hardware to functional specifications in compliance with warranty guidelines, adhering to the warranty processes for repair service.

2.8. Contractor will remove and recycle, or properly dispose of, packing materials and used parts from device installation and break/fix repairs.

2.9. Contractor will provide transportation to and from the end-user location using Contractor's vehicles for all incident types (request and break/fix).

3.0 Desk-side Software Support

3.1. Provide software support remotely and at the desk side for all printing software in use at the City that is accessed via a personal computing or wireless/mobile device.

4.0. IMACD (Installation, Move, Add, Change, Decommission)

4.1. Contractor will back-up available data (i.e. the contents of the MFD address book) prior to device replacement or IMACD, and restore data after service is performed, if applicable.

4.2. Contractor will coordinate, plan, schedule and request through the system of record all IT hardware IMACDs.

4.3. Contractor will receive IMACD requests form City and validate the IMACD request for completeness and authorization.

4.4. Contractor will communicate to City personnel, as appropriate, regarding scheduling r requirements and blackout dates, to minimize the business impact on City operations.

4.5. Contractor will confirm that all items within Contractor scope (e.g. hardware, software, parts, and configurations) necessary to execute the IMACD will be available for the scheduled date of the IMACD.

4.6. Contractor will confirm that all hardware, software, parts, network, cabling, configurations, and any other services/hardware not in scope for Contractor but necessary to execute the IMACD will be available for the scheduled date.

4.7. Contractor will remediate any site readiness issues or availability of hardware, software, parts, network, cabling, configurations, and any other services/hardware necessary to execute the IMACD are in place prior to the scheduled IMACD.

4.8. Contractor will develop and use checklists, sign off procedures for colleagues, and/or approved tools to determine user requirements.

4.9. Contractor will work with end user and IT to identify proper configurations for mapped print queue.

4.10. Contractor will reload MFD system and application configurations, data, or backup files as necessary.

4.11. Contractor will receive written acceptance/provide leave behind card upon completion of IMACD request.

4.12. Contractor will update the asset management tool with updated asset information via bi-directional ticketing system.

5.0 Install

5.1 City and Contractor will place an approved install request with City's IT prior to scheduling a device installation.

5.2. Contractor will pick up device at either a City staging area, or a Contractor staging area and deliver to end-user location.

5.3. Contractor will disconnect old system and return it to the Contractor refurbishment/ disposition location or hold for lease return instructions as requested.

5.4. Contractor will unpack device and install per approved optimization plan and/or as requested by the City.

5.5. Contractor will map print queue to end users' workstations.

5.6. Contractor will install, configure, and test new devices according to the established acceptance testing.

5.7. Contractor will transfer the end-user identified data and settings from the existing system to the new system.

5.8. Contractor will leave end-user training materials/documentation.

5.9. Contractor will dispose of any boot disks, backup CDS, packing materials or other materials delivered with the system according to City Requirements.

5.10. Contractor will update asset records to reflect changes in asset management.

5.11. Contractor will communicate with City regarding problems with an IMACD request.

5.12. Contractor will test the device(s) to confirm functionality.

5.13. Contractor will provide desk-side orientation and training to the end-user, or end user groups, appro-p0riate to the authorized end-user(s) receiving the MFD.

6.0. Add

6.1. City will place an approved add request with Contractor via an approved City Purchase Order.

6.2. Contractor will confirm the requirements and scope and contact the City's IT to coordinate network install.

6.3. Contact the end-user to schedule an appropriate, agreed upon time for the installation to take place.

6.4. Contractor will carry out the Add in accordance and compliance with instructions provided in the request.

7.0. Move

7.1. City will place approved move request with Contractor via a service request form the system of record.

7.2. Contractor will communicate to the end-user any prerequisites and any procedures that need to be followed before or after the move is complete and confirm the requirements.

7.3. Contractor will conduct pre-move checks and determine and make any site preparations that need to completed before the schedule move date.

7.4. Contractor will provide City with certified security wiping of memory or hard drive or take other appropriate action approved by City to delete all data or other information stored or copied on item to be moved.

7.5. Contractor will disconnect a currently installed system unit including directly attached peripheral devices.

7.6. Contractor will pack the hardware for movement from the end-user's current location based on the requirements of the move.

7.7. Contractor will transport or ship the hardware to the end-user's new location.

7.8. Contractor will unpack and reconnect the same system unit and its directly attached peripheral devices for the respective end-user.

7.9. Contractor will conduct the manufacturer's standard installation tests upon completion of such activities to verify the hardware and software are functional with network connectivity.

7.10. Contractor will update the City Change Management plan tracking to reflect changes in the location of the asset in the same month the asset changes occurred.

7.11. Contractor will coordinate the shipment of hardware between City sites and prepare the hardware to be shipped.

7.12. Contractor will be responsible for packing material, transportation, or shipping when a common carrier or a third-party transport company is required for the move at no additional cost to the City.

8.0 Change

8.1. City will place approved change request with Contractor via an approved communication process.

8.2. Contractor will confirm the requirements and scope of the change request and schedule an agreed-upon time with the end user for the work to be completed.

8.3 Contractor will, if applicable, provide City certified security wiping of memory or hard drive or take other appropriate action to delete all data or other information stored or copied on item to be changed as approved by City.

8.4. Contractor will carry out the change in accordance and compliance with instructions outlined in the request.

8.5. Contractor will update the change request in the system of record.

8.6. Contractor will update the tracking as applicable to reflect the change to the asset(s) in the same month that the asset changes occurred.

9.0. Staging

9.1. City will (optionally) optionally provide Contractor with asset tags to be attached to devices requiring Customer asset tracking.

9.2. Contractor will, if requested, apply asset tags to devices according to City procedures and approved processes.

9.3. Contractor will stage and configure hardware per the configuration and preparation instructions in accordance with approved City procedures, including software installation.

9.4. Contractor will perform quality assurance testing to eliminate system defects and inoperability.

9.5. Contractor will provide City with certified security wiping of memory and hard drives or other appropriate action approved by City to delete all data or other information stored or copied on item to be Staged.

9.6. Contractor will update tracking within the same month of any asset changes.

9.7. Contractor will store, stage, configure and deploy hardware to meet daily IMACD requirements of City.

9.8. Contractor will pack hardware for delivery to requested City Department location.

10. Decommissioning

10.1. Contractor will communicate with the City that hardware is ready for decommissioning, donation, or refurbishment.

10.2. Contractor will provide City with certified security wiping of memory and hard drives or other appropriate action to delete all or other information stored or copied, as approved by City for all removed MFDs.

10.3. Contractor will coordinate with City department for scheduling pick-up of hardware.

**16. Performance Penalties**

A. This Agreement may be terminated by City, in its sole discretion, by providing not less than five (5) days prior written notice to Contractor of City's intent to terminate. If this Agreement is terminated by City, an adjustment to Contractor's compensation shall be made, but (1) no amount shall be allowed for anticipated profit or unperformed Services, and (2) any payment due Contractor at the time of termination may be adjusted to the extent of any additional costs to City occasioned by any default by Contractor. Upon receipt of a termination notice, Contractor shall immediately discontinue its provision of the Services and, within five (5) days of the date of the termination notice, deliver or otherwise make available to City, copies (in both hard copy and electronic form, where applicable) of project related data, design calculations, drawings, specifications, reports, estimates, summaries and such other information and materials as may have been accumulated by Contractor in performing the Services. Contractor shall be compensated on a pro-rata basis for Services completed up to the date of termination.

B. This Agreement may be terminated by the contractor, in its sole discretion, by providing not less than thirty (30) days prior written notice to City of Contractor's intent to terminate. If this Agreement is terminated by Contractor, an adjustment to City's payment shall be made within 30 days of termination. Upon receipt of a termination notice, Contractor shall discontinue its provision of the Services within thirty (30) days of the date of the termination notice.

**17. Payment**

A. The compensation for Contractor's performance of the Services shall not exceed the amount of one hundred seventy-five thousand dollars ($175,000.00) for the Services provided during the Initial Term. Should this Agreement be extended, the compensation for Contractor's performance for the Services shall

not exceed the amount of Sixty thousand dollars ($60,000.00) for the Extended Term; bringing the total possible amount of compensation to a not-to-exceed amount of Two Hundred Thirty-five thousand dollars ($235,000). For the Initial Term and the Extended Term, City shall pay Contractor on a time and materials basis up to the not to not-to-exceed amount in accordance with the rates specified in Exhibit "B," titled "Fee Schedule Title- MPS Rate Sheet" which is attached hereto and incorporated herein by this reference.

B. Contractor shall submit monthly invoices to City describing the Services performed during the preceding month. Contractor's invoices shall include a brief description of the Services performed, the dates the Services were performed, the number of hours spent and by whom, and a description of reimbursable expenses related to the Services. City shall pay Contractor no later than thirty (30) days after receipt and approval by City of Contractor's invoice.

C. Any notice or other communication required, or which may be given, pursuant to this Agreement, shall be in writing. Any such notice shall be deemed delivered (i) on the date of delivery in person; (ii) five (5) days after deposit in first class registered mail, with return receipt requested; (iii) on the actual delivery date if deposited with an overnight courier; or (iv) on the date sent by facsimile or electronic mail transmission (including PDF), if confirmed with a copy sent contemporaneously by first class, certified, registered or express mail; in each case properly posted and fully prepaid to the appropriate address set forth below, or such other address as a Party may provide notice in accordance with this section:

| CITY: | CONTRACTOR: |
|---|---|
| City Clerk<br>City of Redlands<br>35 Cajon Street<br>P.O. Box 3005 (mailing)<br>Redlands, CA 92373<br>jdonaldson@cityofredlands.org<br>Phone: (909) 798-7531 | Randolph Hlebasko, President<br>Burtronics Business Systems<br>290 W. Orange Show Road<br>San Bernardino, CA 92408<br>rhlebasko@burtronics.com<br>Phone: 800-523-0822 |

This Agreement is entered into by and between the City of Redlands located at 35 Cajon Street and Burtronics Business Systems licensed to conduct business in the State of California ("Contractor"), located at 290 West Orange Show Rd., #101 for the purpose of providing Managed Print Services.

The signatories to this Managed Print Services Agreement represent that they have the authority to bind their respective organizations to this Agreement.

***In Witness Whereof***, the parties hereto, having read this Managed Print Services Agreement in its entirety, including all attachments, have executed this Agreement.

**This Agreement is effective this 16th day of September, 2025.**

**Initial term of this Agreement is 3 years year(s) with the option for a one-year extended term.**

**Maximum term of this Agreement is four (4) years.**

| | | | |
|---|---|---|---|
| | | | |
| BURTRONICS BUSINESS SYSTEMS | Date | CITY OF REDLANDS | Date |
| | | | |
| Contractor: Randolph Hlebasko, President | | Purchasing Entity: Mario Saucedo, Mayor | |

ATTEST:

_____

Jeanne Donaldson, City Clerk

**EXHIBIT "A"**

**City of Redlands- MFD FLEET LIST**

| Serial number | Make | Model | Dept. | Address | City | State |
|---|---|---|---|---|---|---|
| 5107003 | SHARP COLOR COPIER | MX-6071 | PD | 30 CAJON STREET | REDLANDS | CA |
| 3042413 | SHARP COLOR COPIER | MX-5071 | Library | 125 W. VINE STREET | REDLANDS | CA |
| 33017939 | SHARP COLOR COPIER | BP-70C31 | MUED | 1604 NORTH CRAFTON | MENTONE | CA |
| 33017909 | SHARP COLOR COPIER | BP-70C31 | MUED | 955 PARKFORD DRIVE | REDLANDS | CA |
| 3044663 | SHARP COLOR COPIER | MX-5071 | Purchasing | 1270 W PARK AVE | REDLANDS | CA |
| 3044653 | SHARP COLOR COPIER | MX-5071 | DSD- Building & Safety | 35 CAJON ST, STE 30 | REDLANDS | CA |
| 3044633 | SHARP COLOR COPIER | MX-5071 | Cemetery | 1540 ALESSANDRO ROAD | REDLANDS | CA |
| 3044283 | SHARP COLOR COPIER | MX-5071 | MUED | 35 CAJON STSTE 30 | REDLANDS | CA |
| 3042573 | SHARP COLOR COPIER | MX-5071 | MUED | 955 PARKFORD DRIVE | REDLANDS | CA |
| 3042533 | SHARP COLOR COPIER | MX-5071 | FIRE | 35 CAJON STSTE 30 | REDLANDS | CA |
| 3042473 | SHARP COLOR COPIER | MX-5071 | WWTP | 1950 NEVADA ST | REDLANDS | CA |
| 3042313 | SHARP COLOR COPIER | MX-5071 | Joslyn | 21 GRANT STREET | REDLANDS | CA |
| 3041603 | SHARP COLOR COPIER | MX-5071 | Recreation | 111 W. LUGONIA AVENUE | REDLANDS | CA |
| 3041423 | SHARP COLOR COPIER | MX-5071 | DoIT | 35 CAJON STSTE 30 | REDLANDS | CA |
| 3044303 | SHARP COLOR COPIER | MX-5071 | Garage | 1270 W PARK AVE | REDLANDS | CA |
| 3042623 | SHARP COLOR COPIER | MX-5071 | City Clerk | 35 CAJON STSTE 30 | REDLANDS | CA |
| 3042543 | SHARP COLOR COPIER | MX-5071 | FIRE | 35 CAJON STSTE 30 | REDLANDS | CA |
| 3042513 | SHARP COLOR COPIER | MX-5071 | FCS | 35 CAJON ST SUITE 222 | REDLANDS | CA |
| 3042423 | SHARP COLOR COPIER | MX-5071 | West Sub | 1150 BROOKSIDE AVE | REDLANDS | CA |
| 3042403 | SHARP COLOR COPIER | MX-5071 | Animal Shelter | 504 KANSAS STREET | REDLANDS | CA |
| 3042303 | SHARP COLOR COPIER | MX-5071 | Annex | 30 CAJON STREET | REDLANDS | CA |
| 3041473 | SHARP COLOR COPIER | MX-5071 | Annex | 30 CAJON STREET | REDLANDS | CA |
| 3041393 | SHARP COLOR COPIER | MX-5071 | Recreation | 111 W. LUGONIA AVENUE | REDLANDS | CA |
| 5106723 | SHARP COLOR COPIER | MX-6071 | EOC | 1270 W PARK AVE | REDLANDS | CA |
| 5106233 | SHARP COLOR COPIER | MX-6071 | Human Resources | 35 CAJON STSTE 30 | REDLANDS | CA |
| 5105923 | SHARP COLOR COPIER | MX-6071 | Records | 1270 W PARK AVE | REDLANDS | CA |
| 5106343 | SHARP COLOR COPIER | MX-6071 | Finance | 35 CAJON STSTE 30 | REDLANDS | CA |
| 5106213 | SHARP COLOR COPIER | MX-6071 | Management Serices - Revenue | 35 CAJON STSTE 30 | REDLANDS | CA |
| 5104363 | SHARP COLOR COPIER | MX-6071 | Management Services - Customer Service | 35 CAJON STSTE 30 | REDLANDS | CA |
| 5001232 | SHARP COLOR COPIER | MX-7580N | DSD | 35 CAJON STSTE 30 | REDLANDS | CA |
| 5001212 | SHARP COLOR COPIER | MX-7580N | CMO | 300 E. STATE STREET | REDLANDS | CA |
| 3033321 | SHARP COLOR COPIER | MX-5071 | MUED | 35 CAJON STSTE 30 | REDLANDS | CA |
| TBD | SHARP COLOR COPIER | BP-70C55 | CMO-Homeless Solutions | 300 E. STATE STREET | REDLANDS | CA |

**EXHIBIT "B"**

**FEE SCHEDULE TITLE- MPS RATE SHEET**

**Vendor: Burtronics Business Systems**

**NASPO #188627**

| Required MFP components | |
|---|---|
| **Implementation One-time charge** | **Per unit price** |
| Equipment Delivery / Install | $ 125.00 |
| Prepare copiers for disposal/lease retu | $ 300.00 |
| Lease return shipping will be provided by lease company | |
| **Remote device monitoring** | |
| **Billed monthly** | **Per unit price** |
| Job accounting | inc. |
| Automated meter reads | inc. |
| Automated toner replenishment | inc. |
| | |
| **End user support** | |
| **Billed monthly** | **Per unit price** |
| Training | inc. |
| Help Desk (Hardware support) | inc. |
| Hourly - IT support | $175.00 |
| | |
| **Account Management** | |
| **Billed monthly** | **Per unit price** |
| Reporting | inc. |
| Invoicing | inc. |
| Customer Business Review (Qtrly) | inc. |
| Solution Assessments | inc. |

| Cost Per Click w/OEM Supplies (Billed Monthly) | | | | |
|---|---|---|---|---|
| **Device Type** | **Pages per minute** | | | |
| MFP | Up to 20 | 21-40 | 41-90 | 91-131+ |
| Mono pages | 0.0089 | 0.0089 | 0.0089 | 0.0089 |
| Color pages | 0.0524 | 0.0524 | 0.0524 | 0.0524 |

| Cost Per Click w/Compatible Supplies (Billed Monthly) | | | | |
|---|---|---|---|---|
| **Device Type** | **Pages per minute** | | | |
| MFP | Up to 20 | 21-40 | 41-90 | 91-131+ |
| Mono pages | 0.0089 | 0.0089 | 0.0089 | 0.0089 |
| Color pages | 0.0524 | 0.0524 | 0.0524 | 0.0524 |

**City Council/Financing Authority Meeting** **I. 12.**

**DATE:** 09/16/2025

**TO:** Honorable Mayor and City Council Members

**SUBJECT:** Receive and file the Pavement Accelerated Repair Implementation Strategy (PARIS) Program Annual Report (Municipal Utilities and Engineering Director Harris)

---

**MOTION:**

If the City Council determines the staff recommendation is appropriate, the following motion is provided:

"I move that the City Council receive and file the Pavement Accelerated Repair Implementation Strategy (PARIS) Program annual report."

**RECOMMENDATION:**

Staff recommends that the City Council receive and file the Pavement Accelerated Repair Implementation Strategy (PARIS) Program Annual Report.

**DISCUSSION:**

On March 6, 2012, the City Council adopted the comprehensive Pavement Management Program (PMP 2012). The PMP 2012 provided a condition assessment of all City streets, specified street upgrade strategies, and provided timelines and prioritization for street maintenance treatment. At that time, Redlands streets had an average Pavement Condition Index (PCI) score of 53 (on a scale of 0-100, with 0 being a street needing full reconstruction and 100 being a new street). An average PCI of 53 is considered to be poor according to industry standards. As a result, the City Council determined the rehabilitation and improvement of the City streets was a top priority. In order to significantly improve the street conditions, staff developed the Pavement Accelerated Repair Implementation Strategy (PARIS) program.

On September 18, 2012, the City Council adopted PARIS with Resolution No.7219. The PARIS program identified funding sources and specific paving strategies to address the poor condition of the City's streets most efficiently and cost-effectively. The report outlined paving strategies to upgrade nearly 2/3 of all City streets (440 lane miles) in five (5) phases.

Ordinance No. 2787, adopted by the City Council on December 4, 2012, requires the City staff to prepare a report on revenues available for street repairs each year. The report also accounts for uses of the money such as project line-item expenses. The fifth and final phase of the PARIS Project was completed in December 2020, achieving the original goal of rehabilitating 440 lane miles of streets. Although $57.3 million was available for the project, PARIS was completed for $52.0 million, and the remaining funds were carried over into the Pavement Management Program (PMP).

In 2019, staff developed a strategy to pave the remaining one-third of City streets, while performing the necessary preventive maintenance on the two-thirds of City streets that were previously rehabilitated. On July 2, 2019, the City Council approved an agreement with Bucknam Infrastructure Group, Inc. (Bucknam) to evaluate citywide pavement conditions and update the PMP database. Bucknam assessed the condition of all streets and updated the citywide Pavement Management Program (PMP 2020). The condition of City street surfaces was evaluated, rated, and the projected life cycle for each was determined. The PMP 2020 outlines a schedule for the maintenance and reconstruction of City streets at appropriate time intervals to extend their overall life expectancy most efficiently and economically. In addition, the PMP 2020 establishes a comprehensive process to prioritize the rehabilitation of the City’s roadway system, which will be used as a powerful tool in the decision-making process to utilize the City’s available financial resources effectively.

The updated PMP includes a project forecasting strategy developed by Bucknam that follows the PARIS maintenance and rehabilitation project budgets and addresses the specific needs of each street. Staff used the PMP to prepare plans and specifications for the PMP Street Resurfacing Project as summarized in the table below:

| **FY/Project** | **Lane Miles** | **Contractor** | **Cost** | **Completion** |
|---|---|---|---|---|
| FY 21/22 - PMP 2021 Project | 50 | Matich Corporation | $8.25M | June 2022 |
| FY 22/23 - PMP 2022 Project | 37 | Matich Corporation | $4.93M | December 2023 |
| FY 23/24 - PMP 2023 Project | 25 | Matich Corporation | $4.25M | June 2024 |

| | | | | |
|---|---|---|---|---|
| FY 24/25 - PMP 2024 Project | 28 | Matich Corporation | $3.73M | February 2025 |

As of June 30, 2025, the ending cash balance of the PARIS fund is approximately $3M. These remaining funds will be carried over to the next PMP 2025 Project, and construction of the Project will commence in late 2025.

**SUBMITTED BY:**
John R. Harris, Municipal Utilities and Engineering Director

**RECOMMENDED BY:**
Charles M. Duggan Jr., City Manager

**REVIEWED BY:**
Janice McConnell, Assistant City Manager
Danielle Garcia, Management Services/Finance Director

**PREPARED BY:**
Goutam K. Dobey, City Engineer

---

**Attachments**

PARIS Reconciliation
PARIS/PMP Map

---

PARIS Project
Revenue & Expenditures
As of 7/25/2023

**PARIS Project Summary**

| | FY 2012-13 | FY 2013-14 | FY 2014-15 | FY 2015-16 | FY 2016-17 | FY 2017-18 | FY 2018-19 | FY 2019-20 | FY 2020-21 | FY 2021-22 | FY 2022-23 | FY 2023-24 | FY 2024-25 (Preliminary) |
|---|---|---|---|---|---|---|---|---|---|---|---|---|---|
| **Beginning Cash** | $ 2,026,873 | $ 6,135,331 | $ 6,275,383 | $ 9,793,684 | $ 9,880,829 | $ 3,448,175 | $ 10,234,522 | $ 8,198,152 | $ 9,721,885 | $ 6,627,871 | $ 2,918,454 | $ 5,815,030 | $ 3,052,993 |
| **Revenues** | 4,754,695 | 9,740,264 | 16,627,340 | 4,856,857 | 2,906,641 | 9,239,827 | 8,225,190 | 5,956,727 | 6,287,043 | 7,441,910 | 6,187,865 | 9,962,687 | 9,392,125 |
| **Expenditures** | (646,237) | (9,600,212) | (13,109,039) | (4,769,713) | (9,339,295) | (2,453,480) | (10,261,560) | (4,432,994) | (9,381,057) | (11,151,328) | (3,291,289) | (12,724,724) | (9,243,922) |
| **Net Income (Loss)** | 4,108,458 | 140,052 | 3,518,301 | 87,144 | (6,432,654) | 6,786,347 | (2,036,370) | 1,523,733 | (3,094,014) | (3,709,417) | 2,896,576 | (2,762,037) | 148,203 |
| **Ending Cash** | $ 6,135,331 | $ 6,275,383 | $ 9,793,684 | $ 9,880,829 | $ 3,448,175 | $ 10,234,522 | $ 8,198,152 | $ 9,721,885 | $ 6,627,871 | $ 2,918,454 | $ 5,815,030 | $ 3,052,993 | $ 3,201,196 |

**Local Transportation (209/211) Detail**

| | FY 2012-13 | FY 2013-14 | FY 2014-15 | FY 2015-16 | FY 2016-17 | FY 2017-18 | FY 2018-19 | FY 2019-20 | FY 2020-21 | FY 2021-22 | FY 2022-23 | FY 2023-24 | FY 2024-25 (Preliminary) |
|---|---|---|---|---|---|---|---|---|---|---|---|---|---|
| **Beginning Cash** | $ - | $ 3,095,413 | $ 2,236,250 | $ 5,827,838 | $ 5,114,670 | $ 413,309 | $ 7,859,468 | $ 7,604,471 | $ 8,929,882 | $ 5,271,333 | $ 2,191,597 | $ 3,745,905 | $ 2,577,702 |
| **Revenues:** | | | | | | | | | | | | | |
| Solid Waste Road Impacts Transfer | 3,622,150 | 3,622,150 | 3,622,150 | 3,622,150 | 3,622,150 | 3,622,150 | 3,622,150 | 3,622,150 | 3,622,150 | 3,622,150 | 3,622,150 | 3,622,150 | 3,622,150 |
| Less: Solid Waste Bond Payment | | (1,308,189) | (1,703,875) | (1,699,975) | (1,699,100) | (1,700,700) | (1,674,052) | (1,676,536) | (1,675,516) | (1,670,993) | (1,504,196) | (1,670,103) | (1,504,744) |
| Less: iBank 15-105 Payment | | | | (195,587) | (212,249) | (164,934) | (203,332) | (201,261) | (203,218) | (203,159) | (203,097) | (203,034) | (202,696) |
| Less: iBank 17-114 Payment | | | | | (124,535) | (175,715) | (214,105) | (216,056) | (213,976) | (213,907) | (213,837) | (213,765) | (213,690) |
| Solid Waste - Road Impacts Transfer (net) | 3,622,150 | 2,313,961 | 1,918,275 | 1,726,589 | 1,586,266 | 1,580,801 | 1,530,660 | 1,528,297 | 1,529,440 | 1,534,091 | 1,701,020 | 1,535,248 | 1,701,020 |
| Water - Road Impacts Transfer | 102,412 | 102,412 | 102,412 | 102,412 | 102,412 | 102,412 | 102,412 | 102,412 | 102,412 | 102,412 | 102,412 | 102,412 | 102,412 |
| Sewer - Road Impacts Transfer | 17,088 | 17,088 | 17,088 | 17,088 | 17,088 | 17,088 | 17,088 | 17,088 | 17,088 | 17,088 | 17,088 | 17,088 | 17,088 |
| Water/Sewer - Reconciliation | | 6,237,739 | | | | | | | | | | | |
| Paris Soft Costs | | | | | | 350,000 | 350,000 | | 700,000 | 350,000 | 350,000 | 350,000 | 350,000 |
| SB1-RMRA | | | | | | | 1,641,586 | 1,368,015 | 1,265,655 | 1,428,405 | 1,594,983 | 1,837,555 | 1,864,736 |
| Measure I | | | | | | | 3,084,916 | 1,253,510 | 1,034,077 | 2,248,805 | 588,713 | 3,733,391 | 2,191,803 |
| Cost Recovery/Reimbursed Exp. | | | | | | | | | 36,186 | 58,339 | - | 24,448 | 815,066 |
| Interest Income | | | | | | (77,919) | 179,901 | 220,115 | (10,597) | 69,152 | (113,072) | 206,462 | 150,000 |
| Bond/Loan Proceeds | | | 13,429,381 | 1,785,775 | | 6,019,500 | - | - | - | - | - | - | - |
| | 3,741,650 | 8,671,200 | 15,467,156 | 3,631,864 | 1,705,766 | 7,991,882 | 6,906,563 | 4,489,436 | 4,674,262 | 5,808,292 | 4,241,144 | 7,806,604 | 7,192,125 |
| **Expenditures:** | | | | | | | | | | | | | |
| PARIS JL 41049 | (27,021) | (388,198) | (5,411) | (2) | (5) | (175,995) | | | | | | | |
| PARIS 2013 (1-34) JL 41052 | (619,216) | (33,975) | - | - | - | - | | - | - | - | - | - | - |
| PARIS 2013 (35-450) JL 41056 | - | (8,880,554) | (5,870,505) | - | - | - | | - | - | - | - | - | - |
| Geotechnical JL 41057 | - | (227,635) | (71,911) | | | (8,182) | | | | | | | |
| PARIS (567-960) JL 41060 | - | - | (5,927,741) | (4,345,030) | 5,979 | - | | - | - | - | - | - | - |
| PARIS (1029-1490) JL 41063 | - | - | - | - | (6,000,000) | - | | | | | | | |
| Colton Paving JL 41064 | - | - | - | - | (413,101) | (1,470) | | | | | | | |
| PARIS (567-960) JL 41080 | - | - | - | - | - | - | | - | - | - | - | - | - |
| PARIS (1029-1419) JL 41500 | - | - | - | - | - | - | | | | | | | |
| PARIS (1491-1740) JL 41501 | - | - | - | - | - | (12,932) | (6,812,776) | | | | | | |
| PARIS (1741-1988) JL 41502 | - | - | - | - | - | - | (3,534) | | | | | | |
| PARIS (1741-1988) JL 41503 | - | - | - | - | - | (422) | - | (2,806,818) | | | | | |
| PARIS 2019 (1741-1988) PL 211001 | | | | | | | | | (7,916,161) | | | | |
| PARIS 2021 PMP PL 211003 | | | | | | | | | | (8,254,069) | | | |
| Wabash Ave PL 211004 | | | | | | | | | | | | (152,471) | |
| Alley Paving | | | | | | | | | | | (500,000) | | |
| PARIS 2022 PMP PL 211006 | | | | | | | | | | | (1,772,313) | (2,981,030) | |
| Alley Paving 2022 PL 211007 | | | | | | | | | | | | (500,000) | |
| PARIS 2023 PMP PL 211008 | | | | | | | | | | | | (4,251,778) | |
| Alley Paving 2023 PL 211009 | | | | | | | | | | | | (634,528) | (697,199) |
| PARIS 2024 PMP PL211010 | | | | | | | | | | | | | (4,897,066) |
| Alley Paving 2024 PL 211011 | | | | | | | | | | | | | (500,000) |
| IVDA Mountain View Infra Project | | | | | | | | | | (202,818) | | | |
| No JL | - | - | - | - | - | (346,723) | (345,250) | (357,206) | (416,651) | (431,141) | (414,523) | (455,000) | (949,657) |
| PARIS | (646,237) | (9,530,362) | (11,875,569) | (4,345,032) | (6,407,127) | (545,724) | (7,161,560) | (3,164,025) | (8,332,812) | (8,888,028) | (2,686,836) | (8,974,806) | (7,043,922) |
| **Net Income (Loss)** | 3,095,413 | (859,163) | 3,591,587 | (713,168) | (4,701,361) | 7,446,159 | (254,997) | 1,325,411 | (3,658,550) | (3,079,736) | 1,554,308 | (1,168,203) | 148,203 |
| **Ending Cash** | $ 3,095,413 | $ 2,236,250 | $ 5,827,838 | $ 5,114,670 | $ 413,309 | $ 7,859,468 | $ 7,604,471 | $ 8,929,882 | $ 5,271,333 | $ 2,191,597 | $ 3,745,905 | $ 2,577,702 | $ 2,725,905 |

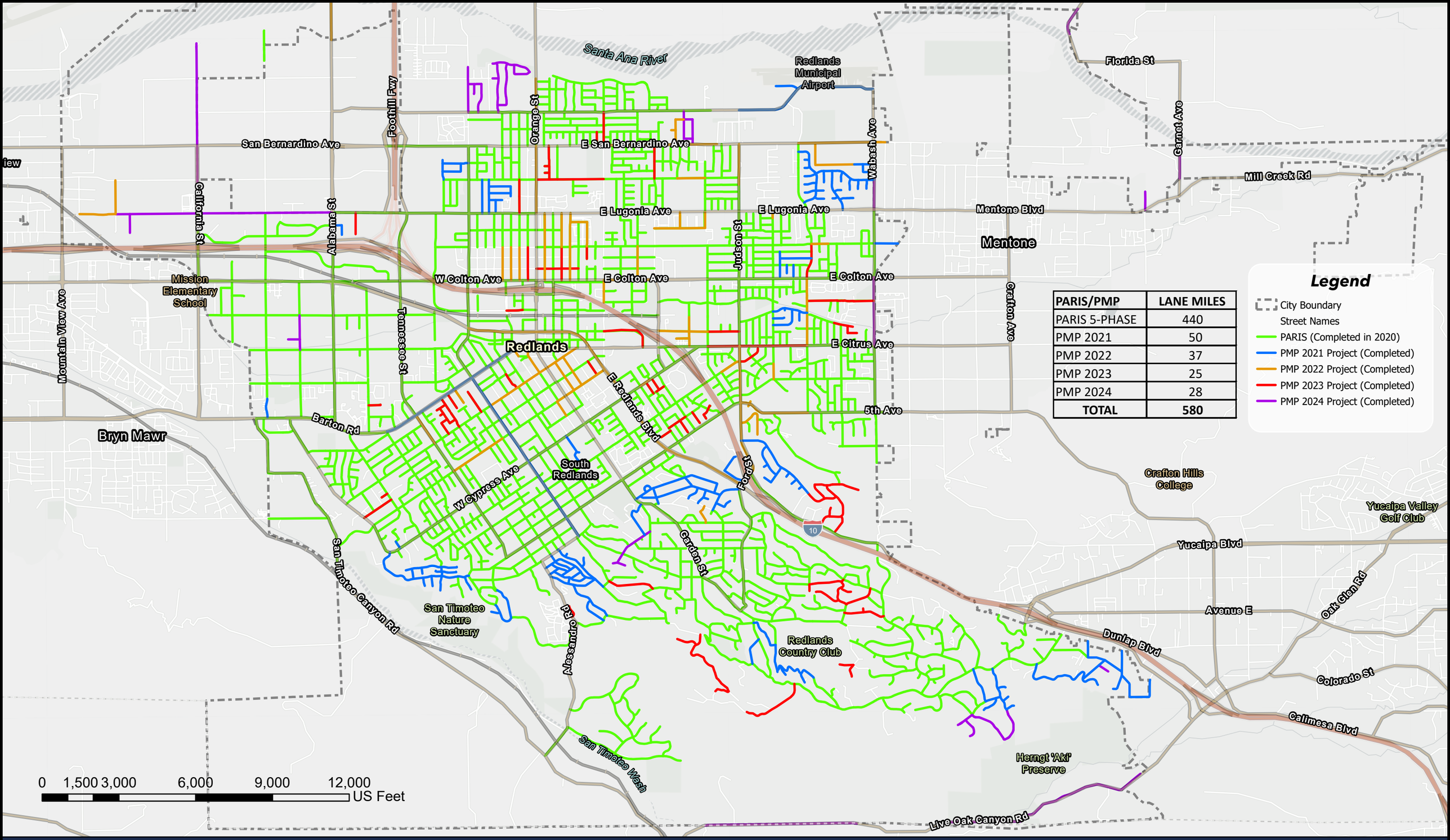


| PARIS/PMP | LANE MILES |
|---|---|
| PARIS 5-PHASE | 440 |
| PMP 2021 | 50 |
| PMP 2022 | 37 |
| PMP 2023 | 25 |
| PMP 2024 | 28 |
| **TOTAL** | **580** |

## Legend

- City Boundary
- Street Names
- PARIS (Completed in 2020)
- PMP 2021 Project (Completed)
- PMP 2022 Project (Completed)
- PMP 2023 Project (Completed)
- PMP 2024 Project (Completed)

*City of Redlands*

# *PARIS/PMP MAP*

7/28/2025

**City Council/Financing Authority Meeting** **I. 13.**

**DATE:** 09/16/2025

**TO:** Honorable Mayor and City Council Members

**SUBJECT:** Approve a purchase order with Evantec Corporation for Joint Utilities Laboratory Consumables and Supplies for a total amount not-to-exceed $83,000, and determine that this action is exempt from environmental review pursuant to Section 15061(b)(3) of the State's guidelines implementing the California Environmental Quality Act (Municipal Utilities and Engineering Director Harris)

---

**MOTION(S):**

If the City Council determines the staff recommendation is appropriate, the following motions are provided:

1. I move that the City Council determine that approval of a purchase order with Evantec Corporation is exempt from environmental review pursuant to Section 15061(b)(3) of the State's guidelines implementing the California Environmental Quality Act.

2. I further move approval of a purchase order with Evantec Corporation for Joint Utilities Laboratory Consumables and Supplies for a total amount not-to-exceed $83,000.

**RECOMMENDATION:**

Staff recommends that the City Council determine that approval of a purchase order with Evantec Corporation is exempt from environmental review pursuant to Section 15061(b)(3) of the State's guidelines implementing the California Environmental Quality Act. Staff further recommends City Council approve a purchase order with Evantec Corporation for Joint Utilities Laboratory Consumables and Supplies for a total amount not-to-exceed $83,000.

**DISCUSSION:**

On February 13, 2024, the Municipal Utilities and Engineering Department (MUED) issued a bid notice for consumables used by the Joint Utility Laboratory (JUL), which allowed procurement of various supplies from different manufacturers. The solicitation also included options to extend the purchase orders and contracts for two (2) additional years. On March 7, 2024, the City Clerk's Office received one (1) bid, submitted by Evantec Corporation (Evantec). On June 18, 2024, City Council approved several FY 24/25 annual purchase orders and contracts, including a purchase order for JUL supplies provided by Evantec. On May 20, 2025, City Council approved several FY 25/26 annual purchase orders and contracts. Although Evantec agreed to extend their contract for a second year through FY 25/26 at their original bid prices, the agreement was inadvertently omitted from those considered by City Council on May 20, 2025.

Approval of this purchase order is exempt from environmental review pursuant to Section 15061(b)(3) of the State's guidelines implementing the California Environmental Quality Act, since it can be seen with certainty that there is no possibility that it will have a significant effect on the environment.

**ALTERNATIVES:**

City Council may deny the staff recommendation and provide alternate direction.

**STRATEGIC PLAN:**
N/A

**SUBMITTED BY:**
John R. Harris, Municipal Utilities and Engineering Director

**RECOMMENDED BY:**
Charles M. Duggan Jr., City Manager

**REVIEWED BY:**
Janice McConnell, Assistant City Manager
Danielle Garcia, Management Services/Finance Director

**PREPARED BY:**
Wilfresha Adweya, Laboratory Manager

## Fiscal Impact

| | |
|---|---|
| **Fiscal Year:** | FY25/26 |
| **Appropriation Required Y/N:** | No |
| **Amount:** | 83,000 |
| **Budgeted Y/N:** | Yes |
| **Account No.:** | 501900/521900 |

**Discussion:**

There is no fiscal impact associated with this action. Sufficient funds remain in the FY 25/26 Water/Wastewater Service budget for this expenditure. Future Agreement extensions will be based on approved fiscal year budget appropriations.

## Attachments

Evantec RFB

Evantec Bid Analysis

Evantec Extension

Bid Package

**CITY OF REDLANDS**
**OFFICE OF THE CITY CLERK**
**BID OPENING REPORT**

The following bids were opened on the **7th day of March 2024 at 10:00 a.m.** on behalf of the Municipal Utilities and Engineering Department for **Joint Utilities Laboratory Consumables and Supplies – 20240213-01JP**. The bid amounts have not been checked and are subject to correction after the bids have been completely reviewed.

| No. | Plan Holder's Name | Bid Signed | Addenda Acknowledged ( N/A ) | Total Bid Amount |
|---|---|---|---|---|
| 1 | Evantec Corporation, Buena Park CA | Yes | N/A | $33,109.00 |

Jeanne Donaldson, City Clerk
City of Redlands, California

Emailed: Councilmembers,
City Manager, PIO, Press
Department Head: John Harris
Staff: Jung Park; LaWanda Butler

CITY OF REDLANDS
MUNICIPAL UTILITIES AND ENGINEERING DEPARTMENT
BID ANALYSIS

**BID NO.** **20240213-01JP** BID DATE: 03/07/2024
**ANNUAL P.O.** **Joint Utility Laboratory Consumables, Replacement Parts, Supplies, & Related Items** FISCAL YEAR: 2024-2025

| Item No. | Item | Manufacturer | Package Amount | EST. Quantity | EVANTEC CORP | |
|---|---|---|---|---|---|---|
| | | | | | Unit Price | Extended Price |
| **TABLE A - BRAND SPECIFIC ITEMS** | | | | | | |
| 1 | Environmental Express K1250 5 ml Vial with Filtering Cap for Dion ex® AS- 40 or AS-DV Autosamplers; 250/PK | Environmental Express | 250/PK | 10 | $126.00 | $1,260 |
| 2 | Sodium Persulfate (White Crystalline Solid/Certified), Fisher Chem ical ™ 500g | Fisher Scientific | 500g | 15 | $290.00 | $4,350 |
| 3 | Microflex Diamond Grip'M Powder Free Latex Exam Gloves, Small 100/BOX | Microflex | 100/BOX | 100 | $18.00 | $1,800.00 |
| 4 | Microflex'M Diamond Grip'M Powder Free Latex Exam Gloves Medium | Microflex | 100/BOX | 20 | $18.00 | $360.00 |
| 5 | Microflex'M Diamond Grip'M Powder Free Latex Exam Gloves Large | Microflex | 100/BOX | 10 | $18.00 | $180.00 |
| 6 | Microflex'M Diamond Grip'M Powder Free Latex Exam Gloves X-Large | Microflex | 100/BOX | 100 | $18.00 | $1,800.00 |
| 7 | Ammonia ISA (Ionic Strength Adjustor) Buffer | Ricca | 1L | 25 | $110.00 | $2,750.00 |
| 8 | 0.22pum filter, 13mm nonsterile Syringe filters-PES membrane | GVS | 500/BOX | 10 | $495.00 | $4,950.00 |
| 9 | 0.22pum filter, 25mm nonsterile Syringe filters-PES membrane | GVS | 500/BOX | 2 | $525.00 | $1,050.00 |
| 10 | Miele, Inc. Neodisher Z Neutralizer 5L | Miele | 5L | 10 | $255.00 | $2,550.00 |
| 11 | Miele, Inc. ProCare Universal 61 Regeneration of the Intergrated water softener. | Miele | 3 x 2kg/box | 20 | $89.00 | $1,780.00 |
| 12 | Miele, Inc. Neodisher Laboclean UW 10KG (powdered soap) | Miele | 10kg/container | 6 | $365.00 | $2,190.00 |
| 13 | Contrad 70 (Decon'M 1003) SL/Bottles | Decon Lab | 4 bottles/Case | 3 | $395.00 | $1,185.00 |
| 14 | lOmL Luer-Lok BD Disposable Syringes (non-sterile) (No Needle | Becton Dickinson | 200/BOX | 15 | $245.00 | $3,675.00 |
| 15 | 3mL Luer-Lok BD Disposable Syringes (non-sterile) | Becton Dickinson | 200/BOX | 30 | $37.00 | $1,110.00 |
| | | | | **TOTAL SUM BID TABLE A (1 THRU 15)** | **$3,004.00** | **$30,990.00** |
| | | | | | | |
| Item No. | Item | Manufacturer | Package Amount | EST. Quantity | EVANTEC CORP | |
| | | | | | Unit Price | Extended Price |
| **TABLE B - Non-Brand Specific Items (Please include the manufacturer and package amount in the bidding table.) - NO EST. QTY as it will depend on the package amount listed by the bidder.** | | | | | | |
| 1 | 10Ml Sterile Polysteyrene Disposable Pipets with Magnifier Strips | Celltreat | 200/Case | 1 | $101.00 | $101.00 |

| Item No. | Item | Manufacturer | Package Amount | EST. Quantity | EVANTEC CORP | |
|---|---|---|---|---|---|---|
| | | | | | Unit Price | Extended Price |
| 2 | 10 X 75mm Test Tubes (Inverted Tubes) | Kimble | 100/Case | 1 | $185.00 | $185.00 |
| 3 | 100 ml Pyrex™ Class A Volumentric Flasks without Stoppers | Corning | 12/Case | 1 | $498.00 | $498.00 |
| 4 | 20 X 150mm Disposable Borosilicate Glass Tubes with Threaded Ends (Screw Cap) | Fisher Brand | 500/Case | 1 | $465.00 | $465.00 |
| 5 | 50 ml Class A Glass Cylinder - All Glass | Corning | 18/Case | 1 | $478.00 | $478.00 |
| 6 | 100 ml Class A Glass Cylinder - All Glass | Corning | 12/Case | 1 | $392.00 | $392.00 |
| | | | | | TOTAL SUM BID TABLE A (1 THRU 6) | $2,119.00 |
| TABLE C - TOTAL BID PRICE | | | | | | |
| | | | | | TOTAL BID PRICE (Table A Subtotal of Extended Price + Tabel B Subtotal of Price Per Unit) | $33,109.00 |

City of
REDLANDS
Incorporated 1888
Municipal Utilities & Engineering Department
35 Cajon Street, Suite 15A
Redlands, CA 92373
909-798-7698

JOHN R. HARRIS
Director

March 6, 2025

Evantec Corporation
3857 Birch Street, Suite 150
Newport Beach, CA 92660

**RE: Notice to Extend Annual Purchase Order Term**
**Joint Utilities Laboratory Consumable & Supplies**

To Whom It May Concern:

You are hereby notified that the City of Redlands wishes to extend the term of the annual Purchase Order No. 22500119, pursuant to the Contract Term on page 17 of the Request for Bids. The City wishes to exercise the option to extend for one (2) year of the three (3) year option.

You are required to return the Notice of Acknowledgement, evidence of current City business license, and W9, within **fourteen (14)** calendar days from the date of this Notice. Submit by USPS or via email to lbutler@cityofredlands.org. The due date is March 20, 2025.

Upon your return of the Notice of Acknowledgement, the Municipal Utilities and Engineering Department process the document and a new purchase order will be issued. The new term will be July 1, 2025 to June 30, 2026.

If you do not return said Acknowledgement and required documentation within the **fourteen (14)** calendar days from the date of this Notice, the City will rebid the commodity.

If you have any questions, you may contact me (909) 798-7527 ext. 1750.

Thank you,

LaWanda Butler
Sr. Administrative Assistant
lbutler@cityofredlands.org

City of
REDLANDS
Incorporated 1888
Municipal Utilities & Engineering Department
35 Cajon Street, Suite 15A
Redlands, CA 92373
909-798-7698

JOHN R. HARRIS
Director

March 6, 2025

Evantec Corporation
3857 Birch Street, Suite 150
Newport Beach, CA 92660

**NOTICE OF ACKNOWLEDGMENT**

**RE: Notice to Extend Annual Purchase Order Term**
**Joint Utilities Laboratory Consumable & Supplies**

This is extension year 2 of 3 per page 17 of the Agreement. Receipt of the above Notice of Acknowledgement is hereby accepted by Ann Nelson this, 6 day of March, 2025.

By: _____
(Signature)

Ann Nelson
(Print Name)

CEO
(Title)

ORIGINAL

PART 2
REQUEST FOR BID #20240213-01JP
Joint Utilities Laboratory Consumables and Supplies

| BID DOCUMENTS COVER PAGE |
|---|
| Name of Firm, Entity or Organization: EVANTEC CORPORATION |
| Federal Employer Identification Number (EIN): [redacted] |
| State of California License Number (if applicable): |
| Name of Contact person: ANN NELSON |
| Title: C.E.O. |
| Email address: anelson@evantec.com |
| Mailing Address: 3857 BIRCH ST. #150, NEWPORT BEACH, CA 92660 |
| Street Address (if different): 6120 VALLEY VIEW ST. |
| City, State, Zip: BUENA PARK, CA 90620 |
| Telephone: (714) 521-2003 Fax: (949) 317-2584 |
| Organization: (check one) Corporation: ☑ Proprietorship: ☐ Other: ☐ Partnership: ☐ Joint Venture: ☐ |
| If Corporation: Date of Incorporation: 3/3/1998 State of Incorporation: CALIFORNIA |
| States Registered in as Foreign Corporation: N/A |
| Authorized Signature: |
| Print Name: ANN NELSON |
| Signature: Ann R. Nelson |
| Title: C.E.O. |
| Phone: (714) 521-2003 |
| *This document must be completed and returned with your submittal.* |

| BIDDER CERTIFICATION | |
|---|---|
| Joint Utilities Laboratory Consumables and Supplies | |
| Submit To: City of Redlands | |
| Office of the City Clerk<br>35 Cajon Street, Suite 4<br>Redlands, CA 92373 | City of Redlands<br>Request for Bid (RFB Certification<br>And Addenda Acknowledgment |

| DUE DATE: | DUE TIME: | REQUEST FOR BID |
|---|---|---|
| Thursday March 07th, 2024 | 10:00am | #20240213-01JP |

| BIDDER NAME: | PHONE NUMBER: |
|---|---|
| EVANTEC CORPORATION | (714) 521-2003 |
| **BIDDER MAILING ADDRESS:** | **FAX NUMBER:** |
| 3857 BIRCH ST. #150 | (949) 317-2584 |
| **CITY/STATE/ZIP** | **E-MAIL ADDRESS:** |
| NEWPORT BEACH, CA 92660 | anelson@evantec.com |

"I, the undersigned, certify that I have reviewed the addenda listed below (list all addenda received to date). I understand that timely commencement will be considered in award of this REQUEST FOR BID and that cancellation of award will be considered if commencement time is not met, and that untimely commencement may be cause for assessment of liquidated damages claims. I further certify that the services will meet or exceed the REQUEST FOR BID requirements. I, the undersigned, declare that I have carefully examined the REQUEST FOR BID, specifications, terms and conditions as applicable for this Request, and that I am thoroughly familiar with all provisions and the quality and type of coverage and services specified. I further declare that I have not divulged, discussed, or compared this REQUEST FOR BID with any other Offer or and have not colluded with any offertory or parties to a REQUEST FOR BID whatsoever for any fraudulent purpose."

| Addendum # | Addendum # | Addendum # | Addendum # | Addendum # |
|---|---|---|---|---|
| | | | | |

"I certify that this quote is made without prior understanding, agreement, or connection with any corporation, firm, or person submitting an REQUEST FOR BID for the same material, supplies, equipment or services and is in all respects fair and without collusion or fraud. I agree to abide by all conditions of this REQUEST FOR BID and certify that I am authorized to sign this response and that the offer is in compliance with all requirements of the REQUEST FOR BID, including but not limited to certification requirements. In conducting offers with an agency for the City of Redlands respondent agrees that if this bid is accepted, the respondent will convey, sell, assign, or transfer to the City all rights, title and interest in and to all causes of action it may now or hereafter acquire under the anti-trust laws of the United States for price fixing relating to the particular commodities or services purchased or acquired by the City. At the City's discretion, such assignment shall be made and become effective at the time the purchasing agency renders final payment to the respondent."

| ANN NELSON, C.E.O. | Ann R. Nelson | 2/19/24 |
|---|---|---|
| Authorized Bidder Name, Title (Print) | Authorized Signature | Date |

*This form must be completed and returned with your Submittal*

| FIRM INFORMATION/ORGANIZATION | |
|---|---|
| CONTRACT MANAGEMENT CONTACT INFORMATION | |
| SHOP OWNER OR MANAGER | |
| NAME | ANN NELSON |
| TITLE | C.E.O. |
| OFFICE PHONE | (714) 521-2003 |
| CELL | [redacted] |
| FAX | (949) 317-2584 |
| HOURS AVAILABLE | 9:00AM - 5:00PM |
| CONTRACT MANAGER | |
| NAME | KEVIN LEWIS |
| TITLE | OPERATIONS MANAGER |
| OFFICE PHONE | (714) 521-2003 |
| CELL | [redacted] |
| FAX | (949) 317-2584 |
| HOURS AVAILABLE | 9:00 AM - 5:00 PM |
| ALTERNATE CONTACT | |
| NAME | MARYANNE LEWIS |
| TITLE | PURCHASING SPECIALIST |
| OFFICE PHONE | (714) 521-2003 |
| CELL | [redacted] |
| FAX | (949) 317-2584 |
| HOURS AVAILABLE | 9:00 AM - 5:00 PM |
| EMERGENCY CONTACT/ AFTER HOURS CONTACT | |
| NAME | KEVIN LEWIS |
| TITLE | OPERATIONS MANAGER |
| OFFICE PHONE | (714) 521-2003 |
| CELL | |
| FAX | (949) 317-2584 |
| HOURS AVAILABLE | 9:00 AM - 5:00 PM |

evantec scientific

Certified WBENC Women's Business Enterprise

SBA U.S. Small Business Administration

## Customer References:

City of San Clemente
100 Avenida Presidio
San Clemente, CA 92672

Contact: Erin Williams – williamse@san.clemente.org
(949)366-1553

City of Ventura
1400 Spinnaker Drive
Ventura, CA 93001

Contact: Shelli St. Clair – sstclair@cityofventura.ca.gov
(805)677-4130

County of San Luis Obispo
Water Quality Lab
1355 Kansas Ave., Suite C
San Luis Obispo, CA 93405

Contact: Vicki Vogel – vvogel@co.slo.ca.us
(805)781-5111

**PART 4**
**PRICE AND FEE BID**
**BID # 20240213-01JP**
**WATER & WASTEWATER TREATMENT PLANT SUPPLIES**

Bidder must bid on all items. Award will be made to the lowest responsive and responsible bidder.
Quantities are estimates only for bid evaluation and will be ordered on a need-by-net basis.
If an item has a brand name on it, you must bid specifically on items of that brand.
Please include the manufacturer and amount for items that are not brand specific items.

## TABLE A – Brand Specific Items

| Item | Manufacturer | Package Amount | EST. QTY | Unit Price | *Extended Price (EST. QTY X Unit Price) |
|---|---|---|---|---|---|
| Environmental Express K1250 5 mL Vial with Filtering Cap for Dionex® AS-40 or AS-DV Autosamplers; 250/PK | Environmental Express | 250/PK | 10 | $ 126.00 | $ 1,260.00 |
| Sodium Persulfate (White Crystalline Solid/Certified), Fisher Chemical™ 500g | Fisher Scientific | 500g | 15 | $ 290.00 | $ 4,350.00 |

| | | | | | |
|---|---|---|---|---|---|
| Microflex™ Diamond Grip™ Powder Free Latex Exam Gloves, Small 100/BOX | Microflex | 100/BOX | 100 | $ 18.00 | $ 1,800.00 |
| Microflex™ Diamond Grip™ Powder Free Latex Exam Gloves, Medium | Microflex | 100/BOX | 20 | $ 18.00 | $ 360.00 |
| Microflex™ Diamond Grip™ Powder Free Latex Exam Gloves, Large | Microflex | 100/BOX | 10 | $ 18.00 | $ 180.00 |
| Microflex™ Diamond Grip™ Powder Free Latex Exam Gloves, X-Large | Microflex | 100/BOX | 100 | $ 18.00 | $ 1,800.00 |
| Ammonia ISA (Ionic Strength Adjustor) Buffer | Ricca | 1L | 25 | $ 110.00 | $ 2,750.00 |
| 0.22µm filter, 13mm, nonsterile Syringe filters- PES membrane | GVS | 500/Box | 10 | $ 495.00 | $ 4,950.00 |
| 0.22µm filter, 25mm, nonsterile Syringe filters- PES membrane | GVS | 500/Box | 2 | $ 525.00 | $ 1,050.00 |
| Miele, Inc. Neodisher Z Neutralizer 5L | Miele | 5L | 10 | $ 255.00 | $ 2,550.00 |

| | | | | | |
|---|---|---|---|---|---|
| Miele, Inc. ProCare Universal 61 Regeneration of the Integrated water softener. | Miele | 3 x 2kg/box | 20 | $ 89.00 | $ 1,780.00 |
| Miele, Inc. Neodisher Laboclean UW 10KG (powdered soap) | Miele | 10kg/container | 6 | $ 365.00 | $ 2,190.00 |
| Contrad 70 (Decon™ 1008) 5L/Bottles | Decon Lab | 4 bottles/Case | 3 | $ 395.00 | $ 1,185.00 |
| 10mL Luer-Lok BD Disposable Syringes (non-sterile) (No Needle | Becton Dickinson | 200/box | 15 | $ 245.00 | $ 3,675.00 |
| 3mL Luer-Lok BD Disposable Syringes (non-sterile) | Becton Dickinson | 200/box | 30 | $ 37.00 | $ 1,110.00 |
| Brand Specific Item | | SUBTOTAL – Table A | | $ 8,004.00 | $ 30,990.00 |

Alternate - 10mL Control Syringe w/ Luer-Lok Tip, 100/case
Sterile

**TABLE B – Non-Brand Specific Items (Please include the manufacturer and package amount in the bidding table.) – NO EST. QTY as it will depend on the package amount listed by the bidder.**

| Item | Manufacturer | Package Amount | Package Price | * Price per Unit (Package Price / Package Amount) |
|---|---|---|---|---|
| 10mL Sterile Polystyrene Disposable Pipets with Magnifier Strips | Celltreat | 200/case | $ 101.00 | $ 101.00 |
| 10 X 75mm Test Tubes (Inverted Tubes) | Kimble | 100/case | $ 185.00 | $ 185.00 |
| 100 mL Pyrex™ Class A Volumentric Flasks without Stoppers | Corning | 12/case | $ 498.00 | $ 498.00 |
| 20 X 150mm Disposable Borosilicate Glass Tubes with Threaded Ends (Screw Cap) | Fisherbrand | 500/case | $ 465.00 | $ 465.00 |
| 50 ml Class A Glass Cylinder - All Glass | Corning | 18/case | $ 478.00 | $ 478.00 |
| 100 ml Class A Glass Cylinder - All Glass | Corning | 12/case | $ 392.00 | $ 392.00 |
| Non-Brand Specific Items | | Subtotal of Price Per Unit – Table B | | $ 2,119.00 |

## TABLE C -- Total Bid Price

| | |
|---|---|
| TOTAL BID PRICE (Table A Subtotal of Extended Price + Table B Subtotal of Price Per Unit) | $ 33,109.00 |

For any item(s) that is not listed in the bid table, City is willing to pay an amount equal to the manufacturer's current published list price plus a nominal markup up to 10%.

**CONTRACT TERM (Please Complete)**

The City may [X] or may not [ ] exercise its option to renew this agreement as stipulated under the same price, terms and conditions for a period one [ ] two [X] three [ ] additional year(s).

Signature [signature] Title Director of Operations Date 2-28-24

Vendor Name: Evantec Corporation

**City Council/Financing Authority Meeting** **I. 14.**

**DATE:** 09/16/2025

**TO:** Honorable Mayor and City Council Members

**SUBJECT:** Approve the Redlands Police Department Tow Services Agreement with Rotational Tow Applicants: Broncs Towing Inc., Pepe's Towing Service, Wilson's Towing, and Armada Towing for the Term 2025-2028 (Police Chief Tolber)

---

**MOTION(S):**

If the City Council determines that staff's recommendation is appropriate, the following motion is provided:

I move to approve the four (4) Tow Services Agreements with:

1. Broncs Towing Inc.
2. Pepe's Towing Service
3. Wilson's Towing
4. Armada Towing

**RECOMMENDATION:**

Staff recommends Council approval of the Tow Services Agreement with the four Redlands Police Department Rotational Tow Applicants as set forth in the report.

**DISCUSSION:**

Staff recommends that the City Council approve a new Tow Services Agreement with the following four (4) tow operators: Broncs Towing Inc., Pepe's Towing Service, Wilson's Towing, and Armada Towing. These companies have consistently provided reliable service to the City of Redlands over several years and have not experienced any significant performance issues. In light of the growing number of traffic collisions and disabled vehicles, the Redlands Police Department supports maintaining a rotation of four tow providers. The previous agreement, which also included three companies, proved effective and beneficial

for both the City and the contracted operators.

In accordance with the City's procurement policy, the Redlands Police Department (RPD) issued a Request for Qualifications (RFQ) to potential tow service providers. RPD received twelve (12) applications, however, only four (4) met the minimum qualifications.

The qualified applicants are as follows:

1. Broncs Towing Inc.
2. Pepe's Towing Service
3. Wilson Towing
4. Armada Towing

Staff have reviewed all submittals and determined that Broncs Towing Inc., Pepe's Towing Service, Wilson's Towing, and Armada Towing meet all requirements outlined in the Request for Qualifications (RFQ). The RFQ mandates full compliance in order to participate in the Redlands Police Department (RPD) Tow Program. Therefore, staff recommends that the City Council approve Tow Services Agreements with the four qualifying companies. Each of these operators maintains good business standing with the Secretary of State and meets all of the minimum requirements to participate in the RPD Tow Program, including but not limited to, maintaining a business office and vehicle storage yard within a three-mile radius of the City of Redlands, adequate signage, vehicle storage facility including a storage area for evidence. Each operator proposes hourly rates that are consistent with those charged by tow operators in neighboring jurisdictions.

To confirm compliance with the minimum requirements of the RFQ, RPD reviewed the bid summaries and supporting documentation submitted by each company, evaluated the 2025–2026 minimum requirements document along with additional materials provided by the businesses, and conducted site visits to the locations of the qualified tow operators. The on-site inspections conducted by RPD staff included a Q&A session and a thorough analysis of the facilities to determine whether they met the standards outlined in the Agreement. While other tow operators have expressed interest in participating in the program, they have not taken the necessary steps to meet the eligibility requirements outlined in the Agreement.

There is no negative fiscal impact; rather, the Tow Agreements generate revenue with fees set at $168 per impounded or stored vehicle. There is no charge for evidence tows, recovered stolen vehicles, or tows related to incapacitated drivers. The hourly rates of all operators are consistent with what surrounding tow operators charge in adjacent cities.

In addition, staff request that the following public records, related to this staff report, be made available for public review in accordance with the California Public Records Act.

These records can be accessed through the following link:
https://destinyhosted.com/public_records.cfm?id=73352&use_type=LOOKUP
Public Request #5573.

**ALTERNATIVES:**

Do not approve the Tow Agreements. The Redlands Police Department will have to re-issue an RFQ to find other tow operators that are willing to submit an application.

**STRATEGIC PLAN:**
N/A

**SUBMITTED BY:**
Rachel Tolber, Chief of Police

**RECOMMENDED BY:**
Charles M. Duggan Jr., City Manager

**REVIEWED BY:**
Yvette M. Abich Garcia, City Attorney
Janice McConnell, Assistant City Manager
Danielle Garcia, Management Services/Finance Director
Dana Abramovitz-Daniel, Procurement Manager

**PREPARED BY:**
Ryan Steinhaus, Traffic Sergeant

---

**Fiscal Impact**

| | |
|---|---|
| **Fiscal Year:** | 2025-2028 |
| **Revenue Generating:** | Yes |
| **Appropriation Required Y/N:** | N |
| **Budgeted Y/N:** | Y |
| **Account No.:** | 101202-4580 |
| **Discussion:** | |

---

**Attachments**

Minimum Requirements
Tow Service Agreement
Signed Operator Approvals

# Minimum requirements

**The following is a list of minimum requirements for the 2025–2028 Tow Contract with the Redlands Police Department.**

Please review each requirement carefully and place a check mark in the box to the left of each item your company can commit to. After completing the checklist, sign and date the form at the bottom. Completion of this checklist is mandatory to be considered for inclusion in the tow contract.

Business & Location Requirements

- ☐ Business office and storage facility within Redlands or within 3 miles of city limits.
- ☐ Minimum of 5 years verifiable for-hire towing experience
- ☐ Sign clearly identifying business as towing service, visible from the street

Tow Trucks Requirements

- ☐ Maintain a minimum of 5 Class A tow trucks (GVWR ≥ 14,000 lbs)
- ☐ At least 1 Class B truck (GVWR ≥ 26,001 lbs)
- ☐ At least 1 Class C truck (3-axle, GVWR ≥ 48,000 lbs)
- ☐ All trucks must meet CVC & Title 13 specifications
- ☐ No trailers for hire counted as primary tow trucks
- ☐ Tow trucks must pass RPD inspection before use

Tow truck Driver Requirements

- ☐ Driver 18+ with valid license for truck class operated
- ☐ Maintain and update current driver list within 7 calendar days of changes
- ☐ Drivers fingerprinted by RPD & have valid medical certificate (if required)

Response & Operation Requirements

- ☐ Ability to respond 24/7
- ☐ 20 minute response (0800-1800)
- ☐ 25 minute response (1801-0759)

- Notify Redlands Police Dispatch if unable to respond or meet time requirements.
- No subcontracting initial calls
- No charge if tow canceled before possession

Rate & Fee Requirements

- Submit reasonable rates (not above retail rate)
- Towing billed from portal to portal
- Operator will pay city a program fee of $168 per tow except evidence tows
- Store up to 4 evidentiary vehicles free of charge

Storage & Records Requirements

- Maintain 60,000 sq. ft. secured storage for 200+ vehicles
- Report weekly list of stored vehicles to Redlands Police Department
- Maintain impound and storage records per Redlands Police standards

Insurance Requirements

- Class A: $500,000 liability, $25,000 on-hook
- Class B: $1,000,000 liability, $50,000 on-hook
- Class C: $1,000,000 liability, $100,000 on-hook
- Workers' comp and garage liability required

Conduct & Compliance Requirements

- No rude or unsafe conduct by employees
- No alcohol/drug use on duty
- Submit to alcohol screening if requested
- No advertising suggesting RPD affiliation

Signature: _____ Print Name: Michael Armada

Company Name: Armada Transport Inc Date: 05/20/2025

DBA Armada Towing

# Minimum requirements

**The following is a list of minimum requirements for the 2025–2028 Tow Contract with the Redlands Police Department.**

Please review each requirement carefully and place a check mark in the box to the left of each item your company can commit to. After completing the checklist, sign and date the form at the bottom. Completion of this checklist is mandatory to be considered for inclusion in the tow contract.

Business & Location Requirements

- ☐ Business office and storage facility within Redlands or within 3 miles of city limits.
- ☐ Minimum of 5 years verifiable for-hire towing experience
- ☐ Sign clearly identifying business as towing service, visible from the street

Tow Trucks Requirements

- ☐ Maintain a minimum of 5 Class A tow trucks (GVWR ≥ 14,000 lbs)
- ☐ At least 1 Class B truck (GVWR ≥ 26,001 lbs)
- ☐ At least 1 Class C truck (3-axle, GVWR ≥ 48,000 lbs)
- ☐ All trucks must meet CVC & Title 13 specifications
- ☐ No trailers for hire counted as primary tow trucks
- ☐ Tow trucks must pass RPD inspection before use

Tow truck Driver Requirements

- ☐ Driver 18+ with valid license for truck class operated
- ☐ Maintain and update current driver list within 7 calendar days of changes
- ☐ Drivers fingerprinted by RPD & have valid medical certificate (if required)

Response & Operation Requirements

- ☐ Ability to respond 24/7
- ☐ 20 minute response (0800-1800)
- ☐ 25 minute response (1801-0759)



Scanned with CamScanner

- ☒ Notify Redlands Police Dispatch if unable to respond or meet time requirements.
- ☒ No subcontracting initial calls
- ☒ No charge if tow canceled before possession

Rate & Fee Requirements

- ☒ Submit reasonable rates (not above retail rate)
- ☒ Towing billed from portal to portal
- ☒ Operator will pay city a program fee of $168 per tow except evidence tows
- ☒ Store up to 4 evidentiary vehicles free of charge

Storage & Records Requirements

- ☒ Maintain 60,000 sq. ft. secured storage for 200+ vehicles
- ☒ Report weekly list of stored vehicles to Redlands Police Department
- ☒ Maintain impound and storage records per Redlands Police standards

Insurance Requirements

- ☒ Class A: $500,000 liability, $25,000 on-hook
- ☐ Class B: $1,000,000 liability, $50,000 on-hook
- ☐ Class C: $1,000,000 liability, $100,000 on-hook
- ☒ Workers' comp and garage liability required

Conduct & Compliance Requirements

- ☒ No rude or unsafe conduct by employees
- ☒ No alcohol/drug use on duty
- ☒ Submit to alcohol screening if requested
- ☒ No advertising suggesting RPD affiliation

Signature: Mostafa Bahrami Print Name: Mostafa Bahrami

Company Name: Broncs Towing Inc Date: 5-19-2025



Scanned with CamScanner

# Minimum requirements

**The following is a list of minimum requirements for the 2025–2028 Tow Contract with the Redlands Police Department.**

Please review each requirement carefully and place a check mark in the box to the left of each item your company can commit to. After completing the checklist, sign and date the form at the bottom. Completion of this checklist is mandatory to be considered for inclusion in the tow contract.

Business & Location Requirements

- ☐ Business office and storage facility within Redlands or within 3 miles of city limits.
- ☐ Minimum of 5 years verifiable for-hire towing experience
- ☐ Sign clearly identifying business as towing service, visible from the street

Tow Trucks Requirements

- ☐ Maintain a minimum of 5 Class A tow trucks (GVWR ≥ 14,000 lbs)
- ☐ At least 1 Class B truck (GVWR ≥ 26,001 lbs)
- ☐ At least 1 Class C truck (3-axle, GVWR ≥ 48,000 lbs)
- ☐ All trucks must meet CVC & Title 13 specifications
- ☐ No trailers for hire counted as primary tow trucks
- ☐ Tow trucks must pass RPD inspection before use

Tow truck Driver Requirements

- ☐ Driver 18+ with valid license for truck class operated
- ☐ Maintain and update current driver list within 7 calendar days of changes
- ☐ Drivers fingerprinted by RPD & have valid medical certificate (if required)

Response & Operation Requirements

- ☐ Ability to respond 24/7
- ☐ 20 minute response (0800-1800)
- ☐ 25 minute response (1801-0759)

- ☐ Notify Redlands Police Dispatch if unable to respond or meet time requirements.
- ☐ No subcontracting initial calls
- ☐ No charge if tow canceled before possession

Rate & Fee Requirements

- ☐ Submit reasonable rates (not above retail rate)
- ☐ Towing billed from portal to portal
- ☐ Operator will pay city a program fee of $168 per tow except evidence tows
- ☐ Store up to 4 evidentiary vehicles free of charge

Storage & Records Requirements

- ☐ Maintain 60,000 sq. ft. secured storage for 200+ vehicles
- ☐ Report weekly list of stored vehicles to Redlands Police Department
- ☐ Maintain impound and storage records per Redlands Police standards

Insurance Requirements

- ☐ Class A: $500,000 liability, $25,000 on-hook
- ☐ Class B: $1,000,000 liability, $50,000 on-hook
- ☐ Class C: $1,000,000 liability, $100,000 on-hook
- ☐ Workers' comp and garage liability required

Conduct & Compliance Requirements

- ☐ No rude or unsafe conduct by employees
- ☐ No alcohol/drug use on duty
- ☐ Submit to alcohol screening if requested
- ☐ No advertising suggesting RPD affiliation

Signature: _____ Print Name: Chris Navarro - Manager

Company Name: Pepe's Towing Service Date: 5/14/2025

# Minimum requirements

**The following is a list of minimum requirements for the 2025–2028 Tow Contract with the Redlands Police Department.**

Please review each requirement carefully and place a check mark in the box to the left of each item your company can commit to. After completing the checklist, sign and date the form at the bottom. Completion of this checklist is mandatory to be considered for inclusion in the tow contract.

Business & Location Requirements

- ☐ Business office and storage facility within Redlands or within 3 miles of city limits.
- ☐ Minimum of 5 years verifiable for-hire towing experience
- ☐ Sign clearly identifying business as towing service, visible from the street

Tow Trucks Requirements

- ☐ Maintain a minimum of 5 Class A tow trucks (GVWR ≥ 14,000 lbs)
- ☐ At least 1 Class B truck (GVWR ≥ 26,001 lbs)
- ☐ At least 1 Class C truck (3-axle, GVWR ≥ 48,000 lbs)
- ☐ All trucks must meet CVC & Title 13 specifications
- ☐ No trailers for hire counted as primary tow trucks
- ☐ Tow trucks must pass RPD inspection before use

Tow truck Driver Requirements

- ☐ Driver 18+ with valid license for truck class operated
- ☐ Maintain and update current driver list within 7 calendar days of changes
- ☐ Drivers fingerprinted by RPD & have valid medical certificate (if required)

Response & Operation Requirements

- ☐ Ability to respond 24/7
- ☐ 20 minute response (0800-1800)
- ☐ 25 minute response (1801-0759)

- ☐ Notify Redlands Police Dispatch if unable to respond or meet time requirements.
- ☐ No subcontracting initial calls
- ☐ No charge if tow canceled before possession

Rate & Fee Requirements

- ☐ Submit reasonable rates (not above retail rate)
- ☐ Towing billed from portal to portal
- ☐ Operator will pay city a program fee of $168 per tow except evidence tows
- ☐ Store up to 4 evidentiary vehicles free of charge

Storage & Records Requirements

- ☐ Maintain 60,000 sq. ft. secured storage for 200+ vehicles
- ☐ Report weekly list of stored vehicles to Redlands Police Department
- ☐ Maintain impound and storage records per Redlands Police standards

Insurance Requirements

- ☐ Class A: $500,000 liability, $25,000 on-hook
- ☐ Class B: $1,000,000 liability, $50,000 on-hook
- ☐ Class C: $1,000,000 liability, $100,000 on-hook
- ☐ Workers' comp and garage liability required

Conduct & Compliance Requirements

- ☐ No rude or unsafe conduct by employees
- ☐ No alcohol/drug use on duty
- ☐ Submit to alcohol screening if requested
- ☐ No advertising suggesting RPD affiliation

Signature: Lilliana Vach Print Name: Lilliana Vach

Company Name: Wilson Towing LLC Date: May 20, 2025

# TOW SERVICE AGREEMENT 2025-2028

This Tow Service Agreement sets forth the rules and regulations that the tow operator (referred to herein as "operator" or "tow operator" identified under "Operator Approval" below) shall comply with to receive a rotation tow listing with the Redlands Police Department (RPD). Participation in the RPD Rotation Tow Program is voluntary. Compliance with all of the terms and conditions of this Tow Service Agreement is mandatory for operator participating in the RPD Rotation Tow Program. The operator, by agreeing to participate in the program, is not acting as an agent for the RPD or the City of Redlands when performing services under this Agreement. For clarification purposes, definitions are contained in Attachment A to this Agreement. Attachment B contains a summarized listing of the California Vehicle Code (CVC) and Civil Code laws applicable to all tow companies in the State of California. Attachment C contains a listing of the tow truck equipment specifications and equipment use requirements applicable to all RPD rotation tow operators. Attachment D contains instructions for completing required application forms.

## I. RPD ROTATION TOW

A. The RPD Deputy Chief shall determine the maximum response time, enrollment period, reasonable rates, minimum number of trucks and any applicable waiver of requirements.

1. Waiver of requirements shall be in effect no longer than six months following the application by, and acceptance of, the operator who meets all requirements of this Agreement. Upon expiration of the six-month period, if operator fails to meet the minimum requirements of this Agreement, this Agreement shall be terminated.

2. A waiver will be granted for requirements based upon law or safety considerations.

3. Maximum Response Time
   a. 0800-1800 20 minutes
   b. 1801-0759 25 minutes

## II. ROTATION LISTS

A. The RPD maintains one rotation tow list for all classes of tow trucks to ensure an equitable distribution of calls.

1. Regardless of the class of tow truck utilized or responding to the call, charges shall not be more than for the class of vehicle towed or serviced, except when vehicle recovery operations require a larger class of tow truck.

2. A call to the operator shall constitute one turn on the list and the operator shall subsequently be moved to the bottom of the list. This includes when the operator fails to answer the phone, is unable to respond, is unable to perform the required service, refuses to respond or provide service, or is canceled due to excessive response time. If it is determined that the operator is not needed and is canceled by the RPD, up to and including arrival at the scene, there shall be no charges, and the operator will be placed back at the top of the list.

3. If the operator is canceled by the vehicle's owner or agent prior to the operator taking possession of the vehicle, there shall be no charges for towing. The operator shall immediately contact the RPD and advise the RPD of the cancellation. The operator will then be placed back at the top of the list.

4. If service, other than towing and recovery, has begun and is canceled by the vehicle's owner or agent, the operator may charge a minimum of one-half of the regular hourly service charge for the time expended on the call. For purposes of cancellation, service begins when physical work on the vehicle has begun, not at the time of response. No lien shall arise for the service unless the operator has presented a written statement to the vehicle's owner or agent for the signed authorization of services to be performed.

   a. The operator shall not take possession of any vehicle to establish a lien for any non-towing services performed, or begun and subsequently canceled, when not entitled to such lien by law. Refer to Civil Code Section 3068.1 for when a lien begins.

B. If two or more operators are called to the same incident, distribution of the vehicles shall be at the discretion of the RPD Incident Commander.

C. The RPD Incident Commander may direct a RPD rotation tow operator to move vehicles to help clear a roadway or for lifesaving operations. Operator shall provide the assistance as directed. There shall be no charge for this assistance, and the assistance provided shall not change the operator's place in the rotation.

D. The operator shall have a full-service business office and storage facility located within the City of Redlands. However, at the discretion RPD Deputy Chief, the operator may have a full-service business office and storage facility located no more than 3 miles outside of the City of Redlands city limits.

E. Operator shall have a minimum of five (5) years verifiable for-hire-towing experience, as an owner or principal, prior to the final filing date of an enrollment period in order to qualify for a RPD rotation tow listing.

F. Ownership status will be investigated and determined by the RPD.

G. There shall be no more than four operators approved for the rotation tow listing.

III. TOW TRUCK CLASSIFICATIONS

A. The operator shall equip and maintain all tow truck(s) covered under this Agreement in accordance with the provisions set forth in the California Vehicle Code, Title 13 of the California Code of Regulations, the specifications contained in this Agreement, and consistent with industry standards and practices.

1. Notwithstanding CVC section 615, all tow trucks shall have recovery capabilities, wheel lift capabilities, and a boom meeting the specifications contained in this Agreement. For the purpose of this Agreement, "a trailer for hire that is being used to transport a vehicle" shall not qualify as a primary tow truck for rotation tow lists.

2. The operator who has a car carrier may be exempted from the recovery, wheel lift, and boom capability requirements. However, the car carrier must be an additional unit.

B. A violation of the Gross Vehicle Weight Rating (GVWR) and safe loading requirements of a tow truck shall be cause for immediate suspension. This includes exceeding the tow truck's GVWR, front axle weight rating, rear axle weight rating, maximum tire weight ratings, or not maintaining 50% of the tow truck's unladen weight on the front axle when lifting/carrying a load.

C. There will be three classes of tow trucks covered under this Agreement:

1. Class A - Light Duty

a. The operator shall maintain a minimum of five tow trucks which has a manufacturer's GVWR of at least 14,000 pounds. Class A equipment specifications can be found in Attachment C of this Agreement.

i. A "trailer for hire" shall not be approved for listing as a Class A tow truck.

ii. Tow operator whose equipment had previously been approved and continuously used on rotation for the RPD and owned by the same operator, but do not have wheel lift capabilities, may apply for and receive a rotation tow listing.

2. Class B- Medium Duty

a. The operator shall maintain a minimum of one tow truck with a GVWR of at least 26,001 pounds. The truck shall be capable of

providing and maintaining continuous air to the towed vehicle. Class B equipment specifications can be found in Attachment C of this Agreement.

1) All Class B tow trucks with a GVWR of less than 26,001 pounds currently approved for the RPD Class B rotation tow list will be allowed to remain on the Class B rotation tow list until June 1, 2028.

b. Tow operator whose equipment had previously been approved and continuously used on rotation for the RPD and owned by the same operator, but do not have wheel lift capabilities, may apply for and receive a rotation tow listing.

3. Class C - Heavy Duty

a. The operator shall maintain at least one three-axle tow truck with a GVWR of at least 48,000 pounds. The truck shall be equipped with air brakes and must be capable of providing and maintaining continuous air to the towed vehicle. Class C equipment specifications can be found in Attachment C of this Agreement.

1) All Class C tow trucks with a GVWR of less than 48,000 pounds currently approved for the RPD Class C rotation tow list will be allowed to remain on the Class C rotation tow list until June 1, 2028.

b. Tow operator whose equipment had previously been approved and continuously used on rotation for the RPD and owned by the same operator, but do not have wheel lift capabilities and/or three-axles, may apply for and receive a rotation tow listing.

D. To properly and safely tow and service the wide variety of vehicles being operated on the highway, a towing procedure may require the use of auxiliary equipment specifically designed for the purpose. This auxiliary equipment should be used when appropriate. A listing of service and auxiliary equipment for each classification can be found in Attachment C of this Agreement.

IV. TOW TRUCK DRIVERS

A. The operator shall ensure that tow truck drivers responding to calls initiated by the RPD are qualified and competent employees of the operator. The operator shall ensure that the tow truck drivers are trained and proficient in the use of the tow truck and related equipment, including, but not limited to, the procedures necessary for the safe towing and recovery of the various types of vehicles serviced through

RPD rotation. Tow truck drivers shall be at least 18 years old and possess the following minimum class driver license:

1. Class A tow truck - A valid Class C license, or a valid Class A license with valid medical certificate.

2. Class B tow truck - A valid Class C license for nonregulated vehicles, or a valid Class A license with valid medical certificate for regulated vehicles pursuant to CVC section 34500.

3. Class C tow truck - A valid Class A license with valid medical certificate.

B. The Class A (1) license must be endorsed to allow operation of special vehicle configurations and/or special cargoes (refer to Attachment B).

C. The operator shall maintain a current list of drivers.

1. The operator shall provide a current list of its drivers to the RPD upon implementation of this Agreement. The operator shall notify the RPD upon any change in driver status, including the addition of any new driver(s), or the deletion of any driver(s). An updated list shall be provided to the RPD within seven calendar days of any change in driver status.

2. Operator, shall as a minimum, maintain the following information for each employee:

a. Full name.
b. Date of birth.
c. California Driver License number.
d. Copy of valid medical certificate (if required).
e. Job title/description.
f. Current home address.
g. Current phone number.
h. Type(s) of truck(s) driver has been trained and instructed to operate.

D. All tow operator employees shall be fingerprinted by the RPD. The tow operator shall provide Department of Justice fingerprint fee as required by the RPD.

E. Tow operator shall have in its possession a tow truck operator's permit issued by the Chief of Police.

V. RATES

A. Fees charged for response to calls originating from the RPD shall be reasonable and not in excess of those rates charged for similar services provided in response to

requests initiated by any other public agency or private person. The reasonableness of the fees charged will be determined in the following manner:

1. The operator shall submit its retail hourly rate to the RPD Deputy Chief. The RPD Deputy Chief shall determine the validity and reasonableness of the submitted rates.

    a. Validity will be based upon telephone quotes, posted rates, area CHP rates and charges to retail customers. Any submitted rate in excess of the operator's retail rate (as defined in Attachment A) will be considered invalid and will not be accepted. If the operator submits an invalid rate shall not be allowed to resubmit a new rate and will be disqualified from RPD rotation tow listing until the next enrollment period.

    b. Reasonableness shall be determined as compared to other rates. If the operator submits a rate that is determined to be excessive, it shall be allowed to resubmit its rates only once.

2. In an effort to remain competitive in the open market, the operator may lower retail rates at any time by notifying the RPD. When the operator lowers its retail rate, that retail rate becomes the new approved RPD rate. Operator may only raise rates for RPD calls during enrollment periods or upon approval after a midterm review. Operator may raise rates for non-RPD calls at any time. Rates for RPD calls shall remain at the lowest retail rate until the next enrollment period.

3. If the operator charges rates above its retail hourly rates or submitted rates for a RPD call shall be in violation of this Agreement and subject to disciplinary action including termination of this Agreement.

B. The rate for towing shall be computed from portal to portal. Time expended shall be charged at a rate not to exceed the hourly rate. Time expended in excess of the minimums shall also be at the hourly rate in no more than 15-minute increments. There shall be no additional charges for mileage and labor.

1. The operator may charge up to a thirty-minute minimum per call for base services.

2. The operator may charge up to a one-hour minimum per call on public safety response calls.

3. The operator may only charge a maximum of one-half hour rate for the towing or service calls for RPD vehicles or vehicles towed as evidence.

4. The operator shall base towing charges upon the class of vehicle being towed regardless of the class of truck used, except when vehicle recovery operations require a larger class truck.

C. Rates for a service call (out of gas, lockouts and tire changes) shall be from portal to end of service and may be at the hourly rate with up to a thirty-minute minimum. Charges in excess of thirty minutes may be charged in no more than 15-minute increments

D. Fees for Special Operations.

1. For special operations involving Class B and C tow trucks, the operator shall submit its proposed fees for vehicle recovery operations and load salvage operations to the RPD Deputy Chief. Fees shall be reasonable and consistent with industry standards for similar operations. Charges in excess of thirty minutes may be charged in no more than 15-minute increments.

a. Hourly rates shall be established for the following:

i. Auxiliary Equipment, e.g., airbags, converter gear/dolly and additional trailers.

ii. Contracted Equipment, e.g., airbags, converter gear/dolly, additional trailers, forklifts, scoop loaders, etc.

iii. Contract labor.

b. The RPD Deputy Chief shall determine the reasonableness of the fees for these types of operations, based upon the average of the proposed fees submitted and a comparison to industry standards for similar operations.

2. Operator shall submit a markup rate (percentage of the cost to the operator) for retail equipment and specialized labor not otherwise listed on the application.

3. If the operator performs a service for which a required rate was not submitted to, and approved by, the RPD, the operator shall only be entitled to charge for the actual cost of that service. Example: contract labor rate not submitted; the operator may only charge for the actual rate paid for the labor.

E. The total fees charged for afterhours release shall be no more than one-half the hourly rate and shall only be allowed if there is no person on duty at the storage facility for release and a call back is required outside normal business hours.

F. Storage Fees.

1. The operator shall submit its proposed storage fees, for inside and outside storage, to RPD Deputy Chief. The RPD Deputy Chief shall determine the reasonableness of the fees for inside and outside storage, based upon the average of the proposed fees submitted by those applying for rotation.

2. The operator shall display in plain view at all cashiers' stations, a sign as described in Section 3070 of the Civil Code, disclosing all storage fees and charges in force, including the maximum storage rate.

3. Vehicles stored up to four (4) hours shall not be charged a storage fee. Vehicles stored 24 hours or less shall be charged no more than one day storage. Each day thereafter shall be calculated by calendar day.

4. Store (outdoors) up to **FOUR** (4) evidentiary vehicles free of charge during the course of this Agreement. These evidence storage spots shall be located together and in one area that is out of the way from the day-to- day operations. This is to prevent tampering or unnecessary touching or handling of the vehicles. Additional vehicles held as evidence by RPD shall be charged no more than one half the normal daily rate unless approved by the RPD Deputy Chief.

5. Vehicles stored by the RPD for forfeiture shall be charged no more than three days storage.

G. This Section V entitled "Rate," shall not apply if the operator responds to a RPD call in a location where towing rates for all tow companies are established by a city or county ordinance.

H. The approved schedule of rates charged by the operator shall be available in the tow truck and shall be presented upon demand to the person(s) for whom the tow services were provided, or his/her agent, or any RPD officer at the scene.

I. Rate requirements represent the maximums the operator may charge on a RPD call. The operator is not precluded from charging less when deemed appropriate by the operator. These requirements shall not be construed as requiring a charge when the operator would not normally charge for such service.

1. No operator or employee of the operator shall refer to any rate as the minimum required or set by the RPD.

## VI. COLLUSION

A. The operator and/or applicant shall not conspire, or attempt to conspire, or commit any other act of collusion, with any other operator or applicant for the purpose of secretly, or otherwise, establishing an unfair understanding regarding rates or conditions to the Agreement that would bring about any unfair condition which could be prejudicial to the RPD, the motoring public, or other operator(s).

1. Examples of "collusion" include but are not limited to: conspiracy by any operator(s) to establish artificially high or low rate(s) for services performed pursuant to this Agreement, conspiracy or attempt to circumvent the midterm review process.

B. A finding by the RPD that the operator or applicant has been involved in collusion shall be cause for termination of this Agreement. The operator or applicant found to be involved in any act, or attempted act of collusion, shall be disqualified from participation on the RPD rotation tow list for the current term, plus three years.

## VII. RESPONSE TO CALLS

A. The operator shall respond to RPD calls 24 hours per day, seven days a week, within the maximum response time as established by RPD Deputy Chief and as specified in Section I, of this Agreement. The operator shall respond with a tow truck of the class required to tow the vehicle specified by the RPD. The operator shall advise RPD dispatch, at the time of notification, if they are either unable to respond or unable to meet the maximum response time. If, after accepting the call, the operator is unable to respond or will be delayed in responding, the operator shall immediately notify the RPD Communications Center. The operator shall not assign initial calls to other tow operators.

1. A failure(s) to respond and/or repeated failure(s) to meet the maximum response time requirements shall constitute failure to comply with the terms and conditions of this Agreement.

a. The RPD Deputy Chief may take immediate disciplinary action for any flagrant violation of the requirement to respond within the maximum response time.

b. When the operator will be temporarily unavailable to provide services due to a preplanned/scheduled activity, e.g., vacation, maintenance or medical leave, it shall notify the RPD Deputy Chief at least 24 hours prior to the date that services will be unavailable, noting the times and dates of the unavailability.

B. The operator, or its employee(s) responding to a RPD call, shall perform the towing or service required for which it was called. This requirement may be waived by the RPD Incident Commander if the requested equipment is inadequate for the service to be performed.

1. Any refusal to respond or to perform the required towing or service will subject the operator to suspension, if deemed appropriate by the RPD.

C. The operator shall not respond to a RPD call assigned to another operator unless requested to do so by the RPD.

1. There may be times when the operator assigned the initial RPD call may require the assistance of an additional operator at the scene. The operator assigned the initial call may, subject to prior agreement with the RPD Deputy Chief, and with the concurrence of the RPD Incident Commander, request a specific operator to assist him/her. The request shall be routed to the additional operator through the RPD.

2. There may be times when the operator, who was not called to a scene, comes upon a collision scene where a vehicle or vehicles are blocking a roadway and a RPD officer requests its assistance in clearing the roadway. In such a case, the operator may be requested to move the vehicle to a safe location, as directed by the officer, and leave it. There shall be no charge for this assistance, and the assistance provided shall not change the operator's place in the rotation.

D. Only the tow operator's personnel and equipment requested shall respond to a RPD call. Additional personnel and equipment shall be at the approval of the RPD Incident Commander. This shall not preclude the operator from responding to an incident to ascertain if additional assistance or equipment is required. There shall be no additional charge for any personnel or equipment that is not necessary to perform the required service.

VIII. STORAGE FACILITY

A. The operator shall be responsible for the security of vehicles and property at the place of storage. As a minimum, a fenced or enclosed area shall be provided. The operator is responsible for the reasonable care, custody, and control of any property contained in towed or stored vehicles. Operator must display at the front of the business a sign which reads "To report any complaints, contact Redlands Police at 909-798-7681".

B. The operator shall obtain approval from the RPD prior to the removal of any property from a stored or impounded vehicle and shall provide a receipt, with a copy placed in the stored vehicle. The requirement to obtain approval from the RPD prior to the removal of property may be excused by the RPD Deputy Chief if it is determined that proper safeguards and procedures are utilized by the operator.

1. This requirement may not be waived in cases where a vehicle has been impounded for evidence or investigation.

2. Upon approval from the RPD, the operator shall release personal property from an impounded or stored vehicle at the request of the vehicle owner or his/her agent.

   a. There shall be no charge for the release of personal property during normal business hours. Operator may charge an afterhours release fee for property released after normal business hours. The fees charged shall be consistent with the afterhours vehicle release provisions.

   b. "Personal property" are items which are not affixed to the vehicle.

      i. Personal property includes papers, transportable cellular telephones, pull-out radios, portable radios and/or portable stereo equipment, clothes, luggage and tools.

3. Cargo shall be released upon demand of the carrier or pursuant to a court order.

C. The primary storage facility shall normally be at the same location as the business address. If not at the same location, there shall be no charge for any additional distance traveled to and from a secondary location. The vehicle and/or personal property shall be released at the primary storage facility or place of business (when the primary storage facility and the place of business are not at the same location) upon request of the owner or a person having a legal entitlement to the vehicle and/or property.

   1. Prior to the utilization of new storage facilities that were not listed on the application for rotation tow listing, the operator shall obtain the Field Services Division Commander's approval and furnish the address.

D. Tow operator shall maintain sufficient storage spaces.

E. The operator's place of business shall have a sign that clearly identifies it to the public as a towing service. The sign shall have letters that are clearly visible to the public from the street. The sign shall be visible at night.

F. For the purpose of this Agreement, "normal business hours" shall be 8:00 a.m. to 6:00 p.m., Monday through Friday, except for the following state recognized holidays:

   1. New Year's Day, Martin Luther King Day, Lincoln Day, Presidents' Day, Memorial Day, Independence Day, Labor Day, Columbus Day, Veterans Day, Thanksgiving Day, day after Thanksgiving Day, and Christmas Day.

2. Business hours shall be posted in plain view to the public.

3. Operator's employees shall be properly trained to conduct business transactions related to towing, storage and release of vehicles/property.

G. The release of vehicles shall be conducted in accordance with RPD procedures.

IX. INSURANCE

A. The operator shall maintain the following minimum levels of insurance from an insurance carrier admitted in California or admitted in the state in which the operator's business is located and is authorized to do business in California:

1. Commercial Business Automobile Liability (as required by Section 16500.5 of the California Vehicle Code) - Bodily injury and property damage with a combined single limit of not less than **$500,000** for Class A tow trucks. The combined limits for Classes B, C, and D shall not be less than **$1,000,000**. These minimum standards are to include non-owned and hired auto coverage.

2. Uninsured Motorist - Legal minimum, combined single limit.

3. On-Hook Coverage - Ensuring the vehicle in tow with limits based on the size of the tow truck.

| | | |
|---|---|---|
| a. | Class A tow truck | $25,000 |
| b. | Class B tow truck | $50,000 |
| c. | Class C tow truck | $100,000 |
| d. | Class D tow truck | $100,000 |

4. Garage Liability - Includes premises and operations. Coverage for bodily injury and property damage with a combined single limit of not less than $500,000.

5. Garage Keepers Liability - Shall be the same minimum as on-hook coverage for vehicles in the care, custody, and control of the operator in the storage yard.

6. Workers' Compensation Insurance - Legal minimum requirement.

B. Proof of insurance shall be in the form of a certificate of insurance. Policy expiration or cancellation shall result in the immediate termination of this Agreement. The operator's insurance policy shall provide for the immediate

notification to the RPD in the event that the insurance policy has expired or is canceled. Additionally, the operator shall notify the RPD in advance of the expiration or cancellation of the operator's insurance policy.

C. Failure of the operator to maintain the minimum insurance requirements set forth in this Agreement shall immediately terminate this Agreement, remove the operator from the RPD rotation tow list and be subject to disciplinary action.

X. INSPECTIONS

A. The RPD shall conduct at least one annual inspection of all tow trucks at no charge to the operator. The RPD may conduct additional inspections without notice during normal business hours. The operator shall not dispatch a tow truck (to a RPD call) that has not been inspected and approved by the RPD. The RPD shall inspect a tow truck within thirty days of a request from the operator.

1. If the operator fails an inspection by RPD or the CHP is entitled to only one reinspection. Failure to pass the reinspection shall be cause for the disqualification of the tow truck from use on RPD rotation. The tow truck shall be disqualified until the next enrollment period.

XI. BUSINESS RECORDS

A. The operator shall maintain records, at its place of business, of tow services furnished.

1. Invoices shall at a minimum include a description of vehicle(s), nature of service, start time, end time, location of call and itemized costs of towing and storage. Release information shall include date and time of release and shall include a copy of the RPD release authorization.

2. Records for each call shall indicate the tow truck driver's name and truck used.

B. The operator shall also maintain business records relating to personnel, insurance, personnel taxes, payroll, applicable operating authorities, local operating authorities, lien sale actions, FCC licensing, and non-RPD tows.

C. The RPD may inspect all operator records without notice during normal business hours.

D. Operator shall permit the RPD to make copies of business records at their place of business, or to remove business records for the purpose of reproduction.

1. The RPD shall provide a receipt for any (original) records removed from the place of business.

E. Records shall be maintained and available for inspection for a period of two years plus the current term of this Agreement.

F. Failure of the operator to comply with the inspection requirements shall be cause for suspension, if deemed appropriate by the RPD.

## XII. FINANCIAL INTEREST

A. No operator or applicant shall be directly involved in the towing related business of any other operator or applicant within the City of Redlands. "Directly involved" shall mean anything in common between operators or applicants with regards to any of the following: 1) business licenses; 2) insurance; 3) tow truck or equipment ownership; and 4) employees.

B. Storage facilities owned by the operator, and shared with another operator, shall only be approved if the owner/operator charges for the space exclusively on a flat monthly rate rather than a vehicle-by-vehicle basis, or combination thereof.

1. Facilities shared by operators shall be physically separated and secured from each other. The RPD Deputy Chief may waive this requirement if deemed appropriate.

C. The sale or transfer of the controlling interest in operator shall immediately terminate this Agreement. The new owner(s) may apply for a rotation tow listing at any time during the remainder of the current Agreement term, regardless of the enrollment period.

D. A terminated or suspended operator and the tow business it owned at the time of its suspension or termination shall not be eligible for a rotation listing for the duration of the suspension or termination.

1. This provision applies to the operator working in any capacity within any tow business, or operating any tow business, and to the tow business, even if operated under new ownership.

E. Any violation of this section is cause for suspension, if deemed appropriate by the RPD.

## XIII. ANNUAL MEETINGS

A. The RPD Deputy Chief may conduct, at a minimum, one annual meeting to discuss issues concerning the tow rotation. Attendance shall be mandatory at all meetings for the operator or its designee wishing to remain on rotation. The RPD shall give the operator thirty (30) days written notice of any such meetings.

## XIV. DEMEANOR AND CONDUCT

A. While involved in RPD rotation tow operations or related business, the operator and/or its employee(s) shall refrain from any act(s) of misconduct, to include, but not be limited to, any of the following:

1. Rude or discourteous behavior.

2. Lack of service, selective service or refusal to provide service which the operator is/should be capable of performing.

3. Any act of sexual harassment or sexual impropriety.

4. Unsafe driving practices.

5. Exhibiting any objective symptoms of alcohol and/or drug use.

6. Appearing at the scene of a RPD rotation tow call with the odor of an alcoholic beverage emitting from his/her breath.

   a. The operator/tow truck driver shall submit to a preliminary alcohol screening test upon demand of the RPD.

B. All RPD related tow service complaints received by the RPD against the operator or its employee(s) will be accepted and investigated in a fair and impartial manner. As a result of the investigation, the RPD may initiate disciplinary action as deemed appropriate. In any event, the operator will be notified of the results of any investigation.

C. Should the filing of criminal charges be a possibility, the RPD will conduct the investigation to conclusion or assist the lead investigating agency and, if warranted, request prosecution.

D. Any violation of this section is cause for suspension, if deemed appropriate by the RPD.

## XV. COMPLIANCE WITH LAW

A. The operator and its employees shall, at all times, comply with federal, state, and local laws and ordinances, which include, but are not limited to, those laws which are applicable to the operator (refer to Attachment B for selected Vehicle Code and Civil Code Sections).

1. In the event of a minor traffic violation(s) by the tow truck driver(s) which is/are known by the RPD, the operator shall be advised of the violation(s) by the RPD. The operator will be granted the opportunity to take necessary steps to ensure that its driver(s) drive(s) in compliance with law. Any subsequent traffic violation(s) may be cause for disciplinary action against the operator and/or the involved employee(s).

2. Any flagrant traffic violation(s) may be cause for immediate disciplinary action against the operator and/or the involved employee(s).

B. The provisions contained in this Section XV, Compliance with Law, do not preclude the RPD from taking appropriate enforcement or administrative action for any violations of law.

C. Any conviction of the operator involving a stolen or embezzled vehicle, fraud related to the towing business, stolen or embezzled property, a crime of violence, a drug related offense, felony driving while under the influence of alcohol and/or a drug, misdemeanor driving while under the influence of alcohol and/or a drug while involved in a RPD rotation tow call, or moral turpitude shall be cause for denial of application or termination of this Agreement.

D. Any conviction of an employee involving a stolen or embezzled vehicle, fraud related to the towing business, stolen or embezzled property, a crime of violence, a drug related offense, felony driving while under the influence of alcohol and/or a drug, misdemeanor driving while under the influence of alcohol and/or a drug while involved in a RPD rotation tow call, or moral turpitude shall be cause for the removal of the employee from the list of current RPD rotation tow truck drivers.

E. The operator, or its employee, arrested/charged for a violation involving any of the above crimes may be suspended until the case is adjudicated.

## XVI. COMPLIANCE WITH AGREEMENT

A. The operator agrees, as a condition of inclusion on the rotation tow list, to comply with the terms and conditions of this Agreement. Furthermore, the operator agrees that failure by the operator or its agents to comply with these terms and conditions shall be cause for written reprimand, suspension, or termination from the RPD rotation tow list(s). Alleged violations of this Agreement will be investigated by the RPD. The operator will be notified of the RPD's findings within 30 days of the conclusion of the investigation.

## XVII. DISCIPLINARY ACTION

A. The RPD Deputy Chief may take disciplinary action against the operator for violations of this Agreement. The RPD Deputy Chief shall retain discretion

regarding the length of any suspension imposed pursuant to the terms and conditions of this Agreement.

B. Records of violations shall be retained by the RPD for at least 36 months.

C. The following major violations shall be cause for immediate suspension:

1. A violation of the equipment requirements related to safety.
2. A violation of the GVWR and safe loading requirements of a tow truck This includes exceeding the tow truck's GVWR, front axle weight rating, rear axle weight rating, maximum tire weight ratings, or not maintaining 50% of the tow truck's unladen weight on the front axle when lifting/carrying a load.
3. A violation of overcharging.
4. A violation of the Redlands Police Department or CHP Biennial Inspection of Terminals (BIT) Program requirements. Any unsatisfactory rating shall be cause for immediate suspension.
5. Failure of the operator to satisfy a court order mandating reimbursement to the vehicle or property owner for the damage or loss which occurred while the vehicle was in its custody.
6. Failure of the operator to comply with the inspection requirements of this Agreement.
7. Failure of the operator to provide the monthly report, or to pay program or release fees as required by this Agreement.
8. Failure of the operator to maintain the minimum insurance requirements set forth in the Agreement.

D. The suspension for the above violations shall remain in effect until the period of suspension imposed is completed, and any and all violation(s) have been corrected and it is confirmed by the RPD that the operator is in full compliance with this Agreement.

E. Failure of the operator or its employee to comply with this Section XIV, Demeanor and Conduct, and/or Section XV, Compliance with Law, may be cause for suspension if deemed appropriate by the RPD Deputy Chief.

1. Minor traffic violations may be considered as minor violations of this Agreement.

2. A tow truck driver, not under the immediate observation of the operator, while on-duty and driving a tow truck, who is arrested and subsequently convicted for misdemeanor while driving under the influence of alcohol and/or drugs, will be subject to suspension from participating as a tow truck driver under the provisions of this Agreement. The length of suspension will be at the RPD Deputy Chief discretion.

F. There shall be no approval of equipment that is not in compliance with the equipment specifications contained in this Agreement at the time of reinstatement. Sections of this Agreement which are commonly referred to as "grandfather clauses" shall no longer apply to the operator who is suspended for one year or more.

G. Major Violations. Violations of the terms and conditions of this Agreement that are subject to suspension for the first violation are categorized as major violations. Any subsequent or continuing major violations shall be cause for termination.

1. Termination shall be invoked if, in the RPD's judgment, continued participation in the Rotation Tow Program by the affected tow operator may result in a hazard to public safety and/or welfare, or the operator or its employee has been convicted of a crime listed in Sections XVC and XVD, respectively.

2. In lieu of termination, the RPD may impose additional suspensions for longer periods, if deemed appropriate.

H. Minor Violations. Except as specifically stated in this Agreement, minor violations of the terms and conditions of this Agreement may be cause for disciplinary action in the following manner.

1. 1st violation in 12 months - letter of written reprimand.

2. 2nd violation in 12 months - 30-day suspension.

3. 3rd violation in 12 months - 60-to-90-day suspension.

4. 4th violation in 12 months - termination of this Agreement.

a. In lieu of a termination, the RPD may impose additional suspensions for longer periods, if deemed appropriate.

I. Nothing herein shall be deemed to prohibit the RPD from immediately suspending any operator whose conduct, or that of its employee(s), in the discretion of the RPD Deputy Chief, is deemed to be a danger to the motoring public or who has engaged in conduct constituting a flagrant violation of an RPD Tow Service Agreement.

## XVIII. DISCIPLINE PROCESS AND APPEALS

A. If the operator is in minor violation of this Agreement, operator shall be notified in writing of the violation by the RPD Deputy Chief. The notice of violation shall be mailed to the operator at the address supplied in the “Operator Approval” portion of this Agreement.

B. If the operator is in major violation of the Agreement or facing suspension/termination shall be notified in writing of the violation by the RPD Deputy Chief. The notice of violation shall be delivered to the operator at the address supplied in the "Operator Approval" portion of this Agreement. A confirmation notice of violation shall be mailed to the operator at the address supplied in the "Operator Approval" portion of this Agreement. Except where public safety may be in jeopardy, immediate suspension shall not be in effect until a notice of violation is delivered to the operator. Service is deemed complete when a notice of violation is delivered to the operator or employee of the operator.

C. In the event the RPD serves the operator with a written reprimand or suspension, the operator may request a hearing within seven calendar days by submitting a request in writing to the RPD Deputy Chief. If a hearing is requested, it shall be held as soon as practicable. The hearing shall be conducted by the RPD Deputy Chief or his/her designee and the operator shall be entitled to present all relevant facts and circumstances in support of his/her position. The operator shall be further entitled to present testimony of at least one representative of a tow truck association or other qualified person. The operator shall be notified in writing of the decision of the RPD Deputy Chief, within ten business days of the date of the hearing.

D. Following a hearing, if the operator is dissatisfied with the RPD Deputy Chief's decision, the operator may request an appeal by submitting a request in writing to the RPD Division commander within seven calendar days. If an appeal is requested, it shall be held as soon as practicable. The appeal shall be conducted by the Chief of Police or his/her designee. The operator shall be notified in writing of the decision of the Chief of Police within ten business days of the date of the appeal. The Chief of Police's decision shall be subject to no further administrative appeal.

E. A suspension shall not take effect until the hearing and appeal process has been exhausted, with the exception of operator whose conduct is deemed to be a danger to the public or whose conduct grossly violates the terms and conditions of this Agreement. If the operator fails to request a hearing or appeal within the specified time or fails to appear at a scheduled hearing or appeal, the action taken by the RPD Deputy Chief or Chief of Police shall be final, and the suspension shall take effect upon written notification to the operator by the RPD Deputy Chief.

## XIX. MIDTERM REVIEW OF THE TERMS AND CONDITIONS

A. The purpose of this section is to provide a process for a midterm review of the terms and conditions of this Agreement in the event that there is a legitimate and substantial change in conditions or law affecting the entire towing industry or the RPD. Examples of conditions may include, but not be limited to:

1. Substantial increase or decrease in business expenses.

2. Advances in technology in the industry related to safety issues.

3. Changes in law requiring the RPD or the operators to perform specific functions or operations in order to comply.

4. Changes in the terms and conditions of this Agreement brought about as a result of recommendations from the RPD Deputy Chief and approved by the Chief of Police or his/her designee.

5. Proposed changes to the terms and conditions agreed upon by the RPD Deputy Chief and the operators at the time that the Agreement was signed (e.g., response times).

B. A midterm review of the terms and conditions of this Agreement may only be granted by the Chief of Police.

1. A request for a midterm review of the terms and conditions of this Agreement shall be communicated to the RPD Deputy Chief in writing, from a representative(s) of the towing industry, not merely at the request of a single operator. The RPD Deputy Chief may also request a midterm review if he/she feels it is in the best interests of the public, the tow industry, and/or the Department. The RPD Deputy Chief will route all legitimate requests for midterm review with all pertinent information, through channels, to the Office of the Chief of Police.

2. Conditions indicating a need for midterm review must be substantial and must affect the entire towing industry or the RPD.

a. For purposes of this Agreement, the midterm review process is not intended to provide relief for a single operator who wishes to increase their rates or change any other term or condition of this Agreement, to compensate for financial problems brought about as a result of business decisions or conditions which affect a small percentage of the industry.

3. A request for review will not be processed if there are 60 days or less remaining in the term of this Agreement.

C. A midterm review, when granted by the Chief of Police or his/her designee, will not automatically authorize a change in the terms and conditions of this Agreement. If a midterm review is announced by the Chief of Police, or his/her designee, it is the responsibility of the RPD Deputy Chief to conduct a review of the conditions which initially caused the request to be communicated and to determine if the change is justified.

1. The RPD Deputy Chief, after completing the review of all pertinent issues, may authorize the operators to submit their proposed changes or he/she may

notify the operators of the changes to be implemented and direct them to comply with those changes. If, after evaluating all pertinent information, the RPD Deputy Chief authorizes or directs a change in the terms and conditions of the Agreement, or if he/she decides that a change is not justified, he/she shall notify the towing industry representative within 14 calendar days of the date of the Chief of Police's announcement authorizing the midterm review.

a. Operators shall resubmit their proposed changes in writing to the RPD Deputy Chief within seven calendar days of the date that the RPD Deputy Chief announces his/her decision. Failure to resubmit a written proposal within the specified time may result in the operator forfeiting its ability to propose more equitable conditions or rates or may be cause for disciplinary action or termination of the Agreement.

i. If the proposed change affects tow rates only, operators shall resubmit their proposed rates on a new application (CHP 34A). The new application shall contain only the information pertinent to the rate proposals. When received by the Police Department, the new application will be attached to the original application for the current term.

ii. The RPD Deputy Chief shall determine the reasonableness of the rate, based upon the average of the proposed rates submitted. An additional page with the new rate(s) shall be signed and attached to the original.

2. In the event that the towing industry representative(s) is/are dissatisfied with the RPD Deputy Chief's decision, the towing industry, through its representative(s), may request an appeal by submitting a request in writing to the Chief of Police within seven calendar days. If an appeal is requested, it shall be conducted by the Chief of Police, or his/her designee, as soon as practicable. The number of representatives at the appeal shall be limited to a maximum of two. A designated representative shall be notified in writing of the decision of the Chief of Police within seven calendar days of the date of the hearing.

3. In the event that the RPD Deputy Chief's decision is to direct the operators to resubmit rates which are more reasonable than the current rates, the new rate application process shall not be initiated until the hearing and appeal process is exhausted. If the towing industry, or its representative(s), fail(s) to request a hearing or appeal within the specified time, or fail(s) to appear at a scheduled hearing or appeal, the decision of the RPD Deputy Chief shall be final, and the new rate application process shall begin.

4. In the event that the RPD Deputy Chief's decision is to direct the operators to comply with a change to any other term or condition of this Agreement, e.g., change in response times, the new terms and conditions shall not be initiated until the hearing and appeal process is exhausted. If the towing industry, or its representative(s), fail(s) to request a hearing or appeal within the specified time, or fail(s) to appear at a scheduled hearing or appeal, the decision of the RPD Deputy Chief's shall be final, and the new rate application process shall begin.

XX. ADVERTISING

A. The operator shall not display any sign or engage in any advertisement indicating an official or unofficial connection with the RPD or the Department of Motor Vehicles.

1. Examples include, "Official RPD Tow," "Approved by RPD," "RPD Rotation Tow," and "Police Tow".

2. This will not preclude the RPD Deputy Chief from implementing a system to mark and identify a particular tow truck as having passed the RPD inspection.

B. Any violation of this section is cause for suspension. At a minimum, the suspension shall be for the duration of the advertisement.

XXI. STORAGE

The operator shall maintain available space of adequate area to store and protect disabled vehicles. Such storage space will meet the following standards.

1. Storage lots shall be a minimum area of **60,000** square feet and shall accommodate a minimum of **200** vehicles. Such lots shall be properly fenced in accordance with the zoning and building requirements of the City and be screened from all public rights-of-way and be at least six feet in height. Lots must be equipped as to provide adequate lighting during the hours of darkness, and further will be provided with facilities for locking or otherwise securing the same. Lots should be so located as to be under constant surveillance of the operator and located in an area subject to police patrol.

2. Vehicles requiring special handling for investigation, i.e., fingerprinting, photographing, searching, etc., must be under roof, in a building capable of being secured. Such vehicles will not be moved or touched after storage therein without the consent of the Redlands Police Department Investigating Officer.

3. When it is necessary to remove vehicles other than those in subsection 2 of this Section to other storage facilities to make space available for current impounds, the

Police Department shall be notified in writing within 24 hours of the new location of such vehicles. The new location will meet the requirements established in this chapter.

XXII. RECORD OF IMPOUNDMENT AND STORAGE

The operator shall keep records of all vehicles ordered impounded and stored by the Redlands Police Department, at its place of business. Such records shall be available to members of the Redlands Police Department and to any other person specifically authorized in writing by the Redlands City Manager.

A. Records shall include, but not be limited to:

1. CHP Form 180 Report of Impounded Vehicles.
2. CHP Form 126 Report of Notification of Impound.
3. City Police Department vehicle release order.
4. Copies of registered letters to vehicle owners.
5. Inventory lists of personal property in impounded and stored vehicles.
6. Charge sheets listing tow charges and storage fees against each individual vehicle, and when possible, will contain the owner's release (signature).

B. The Records listed in subsection A of this Section will be maintained in jacket files by date of impound or storage and readily available for the police officer in charge of the investigation, or responsible members of the California Highway Patrol or by any person specifically authorized in writing by the City Manager.

XXIII. WRITTEN PERMISSION REQUIRED TO DO SERVICE OR WORK

The operator shall not perform any service or work upon any police impound in his possession without first obtaining written permission from the vehicle owner or his agent. No work or contract will be entered into between the tow service and operator and the vehicle owner or his agent until the vehicle has been released in writing by the Redlands Police Department.

XXIV. MONTHLY REPORT OF VEHICLES IN STORAGE

The operator shall render a report each month to the Redlands Police Department listing the vehicles remaining in storage. Report shall specify the period of time of storage of the vehicle not being claimed by the owner.

XXV. PROGRAM FEES

A. The operator shall pay the following fees to the City in connection with the operator's participation in the rotational tow program:

1. For all Impounded and Stored Vehicles $168 program fee

B. The tow operator in not responsible for paying a program fee to the Police Department for vehicles towed for evidence purposes, vehicles stored under CVC 22651 (c), Recovered Stolen Vehicle or CVC 22651 (g), Incapacitated Driver.

C. The operator shall render a report each month to the Redlands Police Department listing the vehicles towed. The report shall be on a form specified by the Redlands Police Department and will accompany the required program fees for that month. The report shall cover the previous calendar month and shall be provided within 15 working days.

XXVI. CANCELLATION

This Agreement may be canceled by either party, by giving ten (10) days prior written notice to the other party.

XXVII. ATTORNEY'S FEES

In the event any action is commenced to enforce or interpret the terms, conditions or provision of this Agreement the prevailing party shall, in addition to any costs and other relief, be entitled to the recovery of its reasonable attorneys' fees, including fees for the use of in-house counsel by a party.

I. OPERATOR APPROVAL

I certify that I have read and understand this Tow Service Agreement and agree to abide by all provisions. I further warrant and represent that I have the authority to bind operator to the obligations under this Agreement.

I agree to indemnify, defend and save harmless the City of Redlands and its elected officials, officers, agents and employees from any and all claims and losses accruing or resulting from operator's or operator's officers, employees and agent's acts or omissions in connection with the performance of this Agreement, and from any and all claims and losses accruing or resulting from operator's or operator's officers, employees and agent's acts or omissions to any person, firm, or corporation who may be injured or damaged by the operator in the performance of this Agreement. The operator, and the operator's officers, employees and agents, in the performance of this Agreement, shall act in an independent capacity and not as officers or employees or agents of the City.

**OPERATOR APPROVAL**

| | | |
|---|---|---|
| Signature | Typed Name | |
| Company | Title | Date |
| Business Address | Phone Number | |

APPROVED:

_____
Rachel Tolber, Chief of Police

_____
Mario Saucedo, Mayor

ATTEST:

_____
Jeanne Donaldson, City Clerk

I. OPERATOR APPROVAL

I certify that I have read and understand this Tow Service Agreement and agree to abide by all provisions. I further warrant and represent that I have the authority to bind operator to the obligations under this Agreement.

I agree to indemnify, defend and save harmless the City of Redlands and its elected officials, officers, agents and employees from any and all claims and losses accruing or resulting from operator's or operator's officers, employees and agent's acts or omissions in connection with the performance of this Agreement, and from any and all claims and losses accruing or resulting from operator's or operator's officers, employees and agent's acts or omissions to any person, firm, or corporation who may be injured or damaged by the operator in the performance of this Agreement. The operator, and the operator's officers, employees and agents, in the performance of this Agreement, shall act in an independent capacity and not as officers or employees or agents of the City.

**OPERATOR APPROVAL**

| | | |
|---|---|---|
| Signature Mostafa Behrami | Typed Name Mostafa Behrami | |
| Company BRONCS TOWING INC | Title SECRETARY | Date 7/03/25 |
| Business Address 380 KANSAS ST KANSAS ST. 92373 | Phone Number (909) 307-0944 | |

APPROVED:

Rachel Tolber, Chief of Police

Mario Saucedo, Mayor

ATTEST:

Jeanne Donaldson, City Clerk

I. OPERATOR APPROVAL

I certify that I have read and understand this Tow Service Agreement and agree to abide by all provisions. I further warrant and represent that I have the authority to bind operator to the obligations under this Agreement.

I agree to indemnify, defend and save harmless the City of Redlands and its elected officials, officers, agents and employees from any and all claims and losses accruing or resulting from operator's or operator's officers, employees and agent's acts or omissions in connection with the performance of this Agreement, and from any and all claims and losses accruing or resulting from operator's or operator's officers, employees and agent's acts or omissions to any person, firm, or corporation who may be injured or damaged by the operator in the performance of this Agreement. The operator, and the operator's officers, employees and agents, in the performance of this Agreement, shall act in an independent capacity and not as officers or employees or agents of the City.

**OPERATOR APPROVAL**

| | | |
|---|---|---|
| Signature: Pedro C. Ortiz | Typed Name: Pedro C. Ortiz | |
| Company: Pepes Towing Service | Title: Admin. manager | Date: 7-3-25 |
| Business Address: 1303 E. Victoria Ave. San Bernardino, CA 92408 | Phone Number: 951-682-5682 | |

APPROVED:

Rachel Tolber, Chief of Police

Mario Saucedo, Mayor

ATTEST:

Jeanne Donaldson, City Clerk

I. OPERATOR APPROVAL

I certify that I have read and understand this Tow Service Agreement and agree to abide by all provisions. I further warrant and represent that I have the authority to bind operator to the obligations under this Agreement.

I agree to indemnify, defend and save harmless the City of Redlands and its elected officials, officers, agents and employees from any and all claims and losses accruing or resulting from operator's or operator's officers, employees and agent's acts or omissions in connection with the performance of this Agreement, and from any and all claims and losses accruing or resulting from operator's or operator's officers, employees and agent's acts or omissions to any person, firm, or corporation who may be injured or damaged by the operator in the performance of this Agreement. The operator, and the operator's officers, employees and agents, in the performance of this Agreement, shall act in an independent capacity and not as officers or employees or agents of the City.

**OPERATOR APPROVAL**

| | | |
|---|---|---|
| Signature | Typed Name Garrett W. Mills | |
| Company Wilson Towing LLC | Title Manager | Date 7-3-25 |
| Business Address 2310 E 3rd St. San Bernardino, CA 92410 | Phone Number 909-888-5455 | |

APPROVED:

Rachel Tolber, Chief of Police

Mario Saucedo, Mayor

ATTEST:

Jeanne Donaldson, City Clerk

I. OPERATOR APPROVAL

I certify that I have read and understand this Tow Service Agreement and agree to abide by all provisions. I further warrant and represent that I have the authority to bind operator to the obligations under this Agreement.

I agree to indemnify, defend and save harmless the City of Redlands and its elected officials, officers, agents and employees from any and all claims and losses accruing or resulting from operator's or operator's officers, employees and agent's acts or omissions in connection with the performance of this Agreement, and from any and all claims and losses accruing or resulting from operator's or operator's officers, employees and agent's acts or omissions to any person, firm, or corporation who may be injured or damaged by the operator in the performance of this Agreement. The operator, and the operator's officers, employees and agents, in the performance of this Agreement, shall act in an independent capacity and not as officers or employees or agents of the City.

**OPERATOR APPROVAL**

| | | |
|---|---|---|
| Signature | Typed Name Abdallah Hasan | |
| Company Armada Towing | Title General Manager | Date 07/03/2025 |
| Business Address 2285 6th St; San Bernardino CA, 92410 | Phone Number 909-428-1115 | |

APPROVED:

Rachel Tolber, Chief of Police

Mario Saucedo, Mayor

ATTEST:

Jeanne Donaldson, City Clerk

# ATTACHMENT 'A'

DEFINITIONS

APPEAL

The final level of review for written reprimands, suspensions, terminations, or review of the RPD Deputy Chief's decision regarding the midterm review process. An informal review conducted by the RPD Deputy Chief or his/her designee, at which the operator may present evidence or witnesses to show that an action taken by the RPD Deputy Chief was improper, or to mitigate the action taken.

BASE SERVICES

Any service or tow which is performed when the vehicle operator or agent is present and the vehicle is not stored at the direction of an officer.

CHIEF OF POLICE

The Chief of Police of the Redlands Police Department.

CHP

The Department of the California Highway Patrol.

ENROLLMENT PERIOD

The period of time when a tow company may submit an application for inclusion on the rotation tow list. The enrollment period will be open for at least 30 days and the dates will be determined by the RPD Deputy Chief.

DURATION OF THE TOW SERVICE AGREEMENT (TSA)

The duration of this TSA shall be set by the RPD Deputy Chief for no less than one year and no longer than three years.

INCIDENT COMMANDER

The uniformed RPD member present at the incident who has scene management responsibilities.

LOAD SALVAGE OPERATIONS

Any operation involving the recovery of a load which has been spilled, or the off-loading and reloading of a load from an overturned vehicle performed in order to upright the vehicle. This will be limited to operations involving Class B, and C tow trucks.

MAJOR VIOLATIONS

Violations of the Tow Service Agreement which are serious enough to require suspension or termination as the first level of disciplinary action.

MINOR VIOLATIONS

Violations of the Tow Service Agreement which are not flagrant and will generally result in a notice of proposed suspension as the first level of discipline. Subsequent minor violations may result in suspension.

NOTICE

All notices relating to this Agreement shall be in writing and delivered to the other party in person, via FAX, or by US mail.

OFFICE OF THE CHIEF OF POLICE

Chief of Police or RPD Deputy Chief.

OPERATOR

A tow service which has been issued a Letter of Authorization, has signed the Tow Service Agreement, and is approved to receive RPD referred calls. The term "operator" refers to the company, its owner(s), and its manager(s) who have authority to enter into an Agreement with the RPD for towing services and to conduct business in accordance with the terms of this Agreement, and its employees.

PARTY OF INTEREST

Refers to the registered owner of the vehicle, or his/her agent. An agent is a party who may lawfully act on behalf of the registered or legal owner of the vehicle.

Deputy Chief (RPD Deputy Chief)

The Deputy Chief in charge of the Redlands Police Department Field Services Division.

PORTAL TO PORTAL

Service shall start at the time of departure from the place of business or point of dispatch, whichever is closer to the location of the call, and shall end at the estimated time of return to the place of business or the completion of the call, if another call is pending, whichever is shorter. Return to place of business includes a reasonable and verifiable amount of time required to place the tow truck back into service when unusual circumstances require additional time that are not part of normal operating procedures. (Examples: 1) 4 X 4 recovery in the mud: reasonable to charge for cleaning mud from truck and equipment, 2) burned car on car carrier: reasonable to charge for cleaning burn debris from carrier bed, 3) car towed from side of road on misty night

and leaves mud track on bed of carrier: not reasonable to charge for cleaning of carrier bed.) For the purpose of this Agreement, "Portal to Portal" shall also mean "Portal to End of Service."

POSSESSION

Pursuant to Section 3068 of the Civil Code, possession is deemed to arise when the vehicle is removed and is in transit.

PUBLIC SAFETY RESPONSE

A response which results in a storage of a vehicle at the direction of an officer. This does not include a storage at the request of the vehicle operator, registered owner, or agent.

REPRESENTATIVE

A person or group of persons appointed by the operators within the City of Redlands, designated to represent their interests to the RPD Deputy Chief.

RESPONSE TIME

The period of time from the operator's notification by a RPD Communications Center of a call to the arrival of the tow truck at the location requested.

RPD

Redlands Police Department

RETAIL RATE

The usual customary retail rate charged by the operator to individual retail customers. This is the competitive rate a company has posted in the office and quotes over the phone.

SUSPENSION

Removal of the operator from the RPD rotation tow list for a specified period of time. Suspensions may be for periods longer than the current term of the Agreement.

TERMINATION

Permanent removal of a tow operator from the RPD rotation tow list for the remainder of the term of the Tow Service Agreement and disqualification from any further participation in the Department's Rotation Tow Program.

TOW TRUCK

A tow truck as defined in Section 615 of the California Vehicle Code. Also includes slide back carriers and wheel lift vehicles.

TOW SERVICE AGREEMENT

A document which sets forth the terms and conditions of an Agreement between the operator and the RPD Deputy Chief representing the RPD.

VEHICLE RECOVERY OPERATION

An operation involving the process of up righting an overturned vehicle or returning a vehicle to a normal position on the roadway which requires the use of auxiliary equipment due to the size or location of the vehicle. This will normally be limited to operations requiring a Class B or C tow truck(s).

WAIVER OF REQUIREMENTS

Special circumstance provides temporary relief from selected terms and conditions of the Tow Service Agreement.

WRITTEN REPRIMAND

A written notice to the operator which specifies any violation(s) of the Tow Service Agreement, orders corrective action, and warns of further action(s) to be taken if corrective action is not taken.

# ATTACHMENT 'B'

Applicable California Vehicle Code and Civil Code Laws

Note: The laws which govern a tow operator's business and vehicle operations are included in, but not limited to, this Attachment. The list of laws included herein is intended as a general guide only. It is the tow operator's responsibility to know and comply with all federal and state statutes and all local ordinances relating to his/her business operations; including those which are and are not listed in this document, any new statutes or ordinances subsequently adopted, as well as amendments, repeals, or modifications of existing statues and ordinances including but not limited to those described in this attachment.

GENERAL

The operator shall be able to properly conduct a lien sale as outlined in Division 11, Chapter 10, Article 2, beginning with Section 22851 of the California Vehicle Code (CVC).

The operator and/or his/her agents, who drive tow trucks, shall be properly licensed in accordance with Section 12804.9 of the California Vehicle Code.

Commercial driver licenses must be endorsed to allow operation of special vehicle configurations and/or special cargoes. The following table shows the correct license class and endorsement for the vehicle or cargo being transported:

| Vehicle Type or Cargo | Class License | Endorsement Code |
|---|---|---|
| Pulling more than one trailer | A | T |
| Transporting passenger for hire | A or B | P |
| Tank vehicle | A or B | N |
| Hazardous materials | A, B, or C | H |
| Tank vehicle with hazardous materials | A, B, or C | X |

Tow truck drivers shall have the proper class of license and endorsement(s) for the vehicle and cargo being transported, as shown above.

1. Whenever tank vehicles, double trailers, and/or hazardous materials carriers are towed or driven, the driver is required to possess the appropriate class of license and endorsement.

2. Empty buses can be towed without the passenger transport endorsement, but the tow truck driver must have the passenger transport endorsement if the bus is driven by him/her, even without passengers.

A. The actual driving of damaged vehicles or vehicles being serviced requires that the Class A license not be restricted to towing vehicles.

3. Commercial vehicle operators or operators of vehicles requiring a special certificate must possess both the appropriate license and certificate and be in possession of a valid medical card.

A. The operator shall comply with the provisions contained in Division 4, Chapter 2 (Reports of Stored Vehicles) of the California Vehicle Code.

B.. The operator shall comply with the provisions of Section 10854 of the California Vehicle Code.

C. The operator shall comply with the provisions of Section 12110 of the California Vehicle Code.

D. The operator shall comply with the provisions of Division 11, Chapter 9, relating to stopping, standing, or parking, and Chapter 10, relating to the removal and disposition of vehicles.

E. Tow trucks shall comply with appropriate lighting and equipment requirements for motor vehicles as contained in the California Vehicle Code.

F. Tow trucks towing disabled legal vehicles or legal combination of vehicles shall comply with the vehicle size and weight limitations contained in Division 15 of the California Vehicle Code.

1. Tow operators may obtain transportation permits, which allow specific variances on these vehicle length and weight limitations, through the California Department of Transportation or local authorities with respect to highways under their respective jurisdictions.

a. The California Department of Transportation issues permit to requesting operators on an annual basis. The permit allows the movement of disabled legal vehicles under the following conditions:

i. Disabled legal vehicles or legal combination of vehicles may be towed on state highways to the nearest appropriate place of repair, or nearest secure storage area that is appropriate for the vehicle or load, whichever is closest and most accessible. It is not the intent of this permit to allow these combinations to be towed to their ultimate destination for convenience, unless that destination meets the foregoing criteria.

ii. Disabled legal vehicles or combination of vehicles, when connected to a tow truck, may exceed legal gross weight limitations. When one end of a truck or truck tractor of legal weight is elevated by a tow truck, the drive axles, the tow truck and/or the drive axle(s) of the disabled vehicle may exceed legal axle or axle group weight limitations. If any axle or axle group exceeds legal weight, movement will be limited to specific routes.

b. Disabled vehicles or combination of vehicles whose movement is authorized by a transportation permit, or any disabled vehicle or any combination of vehicles which, because of damage, has incurred distortion in width or height, causing the vehicle to be in excess of legal dimensions, may be moved at the direction of a peace officer or single trip permit issued by the California Department of Transportation.

c. The driver of a tow truck, operating under a transportation permit, shall comply with all the terms and conditions of the permit.

G. The operator shall comply with the provisions of Sections 3068 through 3074 of the California Civil Code.

H. The operator shall comply with Sections 182, 470, and 532 of the California Penal Code, relating to fraud, and conspiracy to commit fraud.

I. The operator shall comply with the provisions of Sections 17200 and 17500 of the California Business and Professions Code, relating to fraudulent or unfair business practices, or false or misleading statements.

4. Specific California Vehicle Code Requirements Relating to Tow Trucks

A. Summarized California Vehicle Code Provisions

1. Unlawful Advertising (25). "It is unlawful for any person to display any sign, mark, or advertisement indicating an official connection with either the Department of Motor Vehicles or the Department of California Highway Patrol unless such person has lawful authority, permission, or right to make such display."

2. Tow Truck (615). "(a) A 'Tow Truck' is a motor vehicle which has been altered or designed and equipped for and primarily used in the business of towing vehicles by means of a crane, hoist, tow bar, tow line, or dolly or is otherwise exclusively used to render assistance to other vehicles. A “roll-back carrier" designed to carry up to two vehicles is also a tow truck. A trailer for hire that is being used to transport a vehicle is a tow truck. 'Tow truck' does not include an automobile dismantlers vehicle."

NOTE: A vehicle which is not exclusively used in the business of towing vehicles nor used to render assistance to other vehicles is not a "tow truck" as defined above and need not comply with the requirements of the California Vehicle Code Sections cited in this attachment. Such a vehicle shall not be equipped with the flashing amber warning lights permitted on "tow trucks," and is not entitled to special parking privileges under Section 22513.

3. Portable Dolly (4014). "Any portable or collapsible dolly carried in a tow truck or in a truck used by an automobile dismantler and used upon a highway exclusively for towing disabled vehicles is exempt from registration."

4. License Plates (5201). "(a) The rear license plate on a tow truck may be mounted on the left-hand side of the mast assembly at the rear of the cab of the vehicle, not less than 12 inches nor more than 90 inches from the ground."

5. Tow Service Unlawful Acts (12110). "(a) Except as provided in subdivision (b), no towing service shall provide, and no person or public entity shall accept any direct or indirect commission, gift, or any compensation whatever from a towing service in consideration of arranging or requesting the services of a tow truck. As used in this section, "arranging" does not include the activities of employees or principals of a provider of towing services in responding to a request for towing services."

6. Stopping or Parking (22513). Section 22513 prohibits a tow truck operator or owner from stopping at the scene of an accident or near a disabled vehicle for the purpose of soliciting an engagement for services or furnishing any towing services unless summoned to that accident scene or disabled vehicle, or flagged down by the owner or operator of the disabled vehicle or by a peace officer. The tow truck driver or owner is also prohibited from removing any vehicle from a highway or public property, without the express written authorization of the vehicle's owner or operator, or a law enforcement officer or agency, when the vehicle has been left unattended or when there is an injury as a result of an accident.

7. Stopping on Freeway (22520). "No person shall stop, park, or leave standing any vehicle upon a freeway which has full control of access and no crossings at grade except:

a. When necessary to avoid injury or damage to persons or property.

b. When required by law or in obedience to a peace officer or official traffic control device.

c. Any person actually engaged in maintenance or construction on freeway property, or any employee of a public agency actually engaged in the performance of official duties.

d. Any vehicle which is so disabled that it is impossible to avoid temporarily stopping and any vehicle which has been summoned to render assistance to a vehicle or person, including a vehicle owned by the donor of free emergency assistance, which has been summoned by display upon or within a disabled vehicle of a placard or sign given to the driver of the disabled vehicle by the donor for the specific purpose of summoning assistance, other than towing service, from the donor.

e. In locations where stopping, standing or parking is specifically permitted; provided, however, that buses may not stop on freeways unless sidewalks are provided with shoulders of sufficient width to permit stopping without interfering with the normal movement of traffic and without the possibility of crossing over fast lanes to reach the bus stop.

f. Any person reporting a traffic accident or other situation or incident to a peace officer or any person specified in subdivision (c), either directly or by means of an emergency telephone or similar device.

g. The owner or operator of a tow truck operating under an agreement with the Department of the California Highway Patrol for the purpose of rapid removal of impediments to traffic."

8. Towing or Storage Charges: Payment (22651.1). "Persons operating or in charge of any storage facility where vehicles are stored pursuant to Section 22651 shall accept a valid bank credit card or cash for payment of towing and storage by the registered owner, legal owner, or the owner's agent claiming the vehicle. A person operating or in charge of any storage facility who refuses to accept a valid bank credit card shall be liable to the registered owner of the vehicle for four times the amount of the towing and storage charges, but not to exceed five hundred dollars ($500). In addition, persons operating or in charge of the storage facility shall have sufficient funds on the premises to accommodate and make change in a reasonable monetary transaction.

Credit charges for towing and storage services shall comply with Section 1748.1 of the Civil Code. Law enforcement agencies may include the costs of providing for payment by credit when agreeing with a towing or storage provider on rates."

9. Release of the Vehicle (22850.3).

"(a) A vehicle placed in storage pursuant to Section 22850 shall be released to the owner or person in control of the vehicle only if the owner

or person furnishes, to the law enforcement agency or employee who placed the vehicle in storage, satisfactory proof of current registration. The agency which caused the vehicle to be stored may, in its discretion, issue a notice to appear for the registration violation, if the two days immediately following the day of impoundment are weekend days or holidays.

(b) At every storage facility there shall be posted in a conspicuous place a notice to the effect that a vehicle placed in storage pursuant to Section 22850 may be released only on proof of current registration or, at the discretion of the impounding agency, upon the issuance of a notice to appear for the registration violation by the local agency which caused the vehicle to be stored, specifying the name and telephone number of that local agency."

10. Stop lamps, Taillamps, Reflectors (24600, 24603, 24607). In addition to required lighting equipment, tow trucks may be equipped with additional stop lamps, taillamps, and rear reflectors which may be mounted not lower than 15 inches nor higher than the maximum allowable vehicle height and as far forward as the rearmost portion of the driver's seat in the rearmost position. Such additional taillamps shall be lighted whenever the headlamps are lighted.

11. Tow Trucks and Towed Vehicles (24605).

"(a) A tow truck or an automobile dismantler's tow vehicle used to tow a vehicle shall be equipped with and carry a taillamp, a stop lamp, turn signal lamps, and a portable electric extension cord for use in displaying the lamps on the rear of the towed vehicle.

(b) Whenever a tow truck or an automobile dismantler's tow vehicle is towing a vehicle and a stop lamp and turn signal lamps cannot be lighted and displayed on the rear of the towed vehicle, the operator of the tow truck or the automobile dismantler's tow vehicle shall by means of an extension cord display to the rear a stop lamp and turn signal lamps mounted on the towed vehicle, except as provided in subdivision (c). During darkness, if a taillamp on the towed vehicle cannot be lighted, the tow truck or the automobile dismantler's tow vehicle operator shall by means of an extension cord display to the rear a taillamp mounted on the towed vehicle. No other lighting equipment need be displayed on the towed vehicle.

c. Whenever any motor vehicle is towing another motor vehicle, stop lamps and turn signal lamps are not required on the towed motor vehicle, but only if a stop lamp and turn signal lamp on each side of the rear of the towing vehicle is plainly visible to the rear of the towed

vehicle. This subdivision shall not apply to driveway-towaway operations."

12. Utility Flood Lights (25110). Tow trucks that are used to tow disabled vehicles may be equipped with utility flood or loading lamps mounted on the rear, and sides, which project a white light illuminating an area to the side or rear of the vehicle for a distance not to exceed 75 feet at the level of the roadway. Tow trucks may display such utility flood lights only during the period of preparation for towing at the location from which a disabled vehicle is to be towed. The flood lamps shall not be lighted during darkness, except while the vehicle is parked, nor project any glaring light into the eyes of an approaching driver.

13. Warning Lamps on Tow Trucks (25253). Tow trucks used to tow disabled vehicles shall be equipped with flashing amber warning lamps. Tractor-trailer combinations are exempt from this requirement. Tow trucks may display flashing amber warning lamps while providing service to a disabled vehicle. A flashing amber warning lamp upon a tow truck may be displayed to the rear when such tow truck is towing a vehicle and moving at a speed slower than the normal flow of traffic.

Note: Vehicles used by automobile dismantlers to tow disabled vehicles may be equipped with flashing amber warning lights. Vehicles used by service stations or garages to occasionally render assistance to disabled vehicles are not tow trucks and are not permitted to be equipped with flashing amber warning lamps.

14. Use of Flashing Amber Warning Light (25268). "No person shall display a flashing amber warning light on a vehicle as permitted by this code except when an unusual traffic hazard exists."

15. Warning Devices on Disabled or Parked Vehicles (25300).

"(a) Every vehicle which, if operated during darkness, would be subject to the provisions of Section 25100, and every truck tractor irrespective of width, shall be equipped with at least three red emergency reflectors. The reflectors need be carried by only one vehicle in a combination. All reflectors shall be maintained in good working condition.

(b) When any such vehicle is disabled on the roadway during darkness, reflectors of the type specified in subdivision (a) shall be immediately placed as follows:

1. One at the traffic side of the disabled vehicle, not more than 10 feet to the front or rear thereof.

2. One at a distance of approximately 100 feet to the rear of the disabled vehicle in the center of the traffic lane occupied by such vehicle.

3. One at a distance of approximately 100 feet to the front of the disabled vehicle in the center of the traffic lane occupied by such vehicle.

4. If disablement of any such vehicle occurs within 500 feet of a curve, crest of a hill or other obstruction to view, the driver shall so place the reflector in that direction as to afford ample warning to other users of the highway, but in no case less than 100 nor more than 500 feet from the disabled vehicles.

5. If disablement of the vehicle occurs upon any roadway of a divided or one-way highway, the driver shall place one reflector at a distance of approximately 200 feet and one such reflector at a distance of approximately 100 feet to the rear of the vehicle in the center of the lane occupied by the stopped vehicle, and one such reflector at the traffic side of the vehicle not more than 10 feet to the rear of the vehicle.

c. When any such vehicle is disabled or parked off the roadway but within 10 feet thereof during darkness, warning reflectors of the type specified in subdivision (a) shall be immediately placed by the driver as follows: One at a distance of approximately 200 feet and one at a distance of approximately 100 feet to the rear of the vehicle, and one at the traffic side of the vehicle not more than 10 feet to the rear of the vehicle. The reflectors shall, if possible, be placed between the edge of the roadway and the vehicle, but in no event less than 2 feet to the left of the widest portion of the vehicle or load thereon.

d. Until the reflectors required by this Section can be placed properly, the requirements of this Section may be complied with temporarily by either placing lighted red fuses in the required locations or by use of turn signal lamps, but only if front turn signal lamps at each side are being flashed simultaneously.

e. The reflectors shall be displayed continuously during darkness while the vehicle remains disabled upon the roadway or parked or disabled within 10 feet thereof.

f. Subdivisions (b), (c), (d), and (e) do not apply to a vehicle under either of the following circumstances:

(1) Parked in a legal position within the corporate limits of any city.

(2) Parked in a legal position upon a roadway bounded by adjacent curbs.

(g) In addition to the reflectors specified in subdivision (a), an emergency warning sign or banner may be attached to a vehicle which is disabled upon the roadway or which is parked or disabled within 10 feet of a roadway."

16. Use of Fuses (25305).

"(a) No person shall place, deposit, or display upon or adjacent to any highway any lighted fuses, except as a warning to approaching vehicular traffic or railroad trains, or both, of an existing hazard upon or adjacent to the highway or highway-railroad crossing.

b. It is unlawful to use any fuse which produces other than a red light."

17. Brakes (26453, 26454, 26458). Disabled motor vehicles equipped with power brakes are exempt from the provisions of Vehicle Code Section 26458 which require a single control on the towing vehicle to operate the brakes on the towed vehicle. Such combinations must meet the stopping distance requirement of 50 feet from an initial speed of 20 miles per hour. The service brakes on the tow truck shall be adequate to control the movement of and stop and hold the combination of vehicles under all conditions and on any grade on which they are operated. Brakes are required to be maintained in good working order at all times.

18. Broom, Shovel and Extinguisher (27700).

"(a) Tow trucks shall be equipped with and carry all of the following:

a. One or more brooms, and the driver of the tow truck engaged to remove a disabled vehicle from the scene of an accident shall remove all glass and debris deposited upon the roadway by the disabled vehicle which is to be towed.

b. One or more shovels, and whenever practical the tow truck driver engaged to remove any disabled vehicle shall spread dirt

upon that portion of the roadway where the oil or grease has been deposited by the disabled vehicle.

c. One or more fire extinguishers of the dry chemical or carbon dioxide type with an aggregate rating of at least 4-B, C units and bearing the approval of a laboratory nationally recognized as properly equipped to make such approval.

d. A person licensed as a repossession agency pursuant to Chapter 11 (commencing with Section 7500) of Division 3 of the Business and Professions Code is exempt from this section."

19. Signs, Tow Trucks (27907). "There shall be displayed in a conspicuous place on both the right and left side of a tow truck or an automobile dismantler's tow vehicle used to tow vehicles a sign showing the name of the company or the owner or operator of the tow truck or the automobile dismantler's tow vehicle. The sign shall also contain the business address and telephone number of the owner or driver. The letters of the sign shall be not less than 2 inches in height and the lettering shall be in contrast to the color of the background upon which they are placed."

NOTE: California Vehicle Code Section 25 prohibits the display of any sign, mark, or advertisement indicating an official connection between any tow service and the California Highway Patrol.

20. Safety Chains (29004).

a. "Every towed vehicle shall be coupled to the towing vehicle or tow truck by means of a safety chain, cable, or equivalent device in addition to the regular drawbar, tongue or other connection.

b. All safety connections and attachments shall be of sufficient strength to control the towed vehicle in event of failure of the regular hitch, coupling device, drawbar, tongue or other connection. All safety connections and attachments also shall have a positive means of ensuring that the safety connection or attachment does not become dislodged while in transit.

(c) No more slack shall be left in a safety chain, cable or equivalent device than is necessary to permit proper turning. When a drawbar, as defined in Section 300, is used as the towing connection, the safety chain, cable or equivalent device shall be connected to the towed and towing vehicle and to the drawbar so as to prevent the drawbar from dropping to the ground if the drawbar falls."

## ATTACHMENT "C"

I. GENERAL EQUIPMENT SPECIFICATIONS AND USE REQUIREMENTS

A. Tow Truck and Car Carrier Classifications

Tow truck and car carrier classifications are based on the truck chassis GVWR, and the classification system used by the American Trucking Association (ATA) and truck manufacturers.

| ATA and Manufacturers Classifications | RPD Rotation Classifications |
|---|---|
| a. Class 3 - 10,000 - 14,000 pounds GVWR | (Class A Tow Trucks) |
| b. Class 4 - 14,001 - 16,000 pounds GVWR | (Class A Tow Trucks) |
| c. Class 5 - 16,001 - 19,500 pounds GVWR | (Class A Tow Trucks) |
| d. Class 6 - 19,501 - 26,000 pounds GVWR | (Class B Tow Trucks) |
| e. Class 7 - 26,001 - 33,000 pounds GVWR | (Class B Tow Trucks) |
| f. Class 8 - 33,001 or more GVWR | (Class C & D Tow Trucks) |

B. Equipment Limitations

1. All towing equipment, recovery equipment, and carrier ratings are based on structural factors only. Actual towing, carrying, and recovery capacity may be limited by the capacity of the chassis and the optional equipment selected.

C. Towing Limitations

1. The total weight of the truck, including the lifted load, shall fall within the GVWR and not exceed either the front axle weight ratings (FAWR) or rear axle weight ratings (RAWR).

2. The truck must meet all applicable state and/or federal standards.

3. The front axle load must be at least 50% of its normal or unladen weight after the load is lifted.

4. Any violation of this element is cause for suspension.

D. Identification Labels

1. Each piece of towing equipment shall have a label or identification tag permanently affixed to the equipment in a prominent location to identify the manufacturer, serial number, model, and rated capacity.

E. Recovery Equipment Rating

1. The basic performance rating of the recovery equipment is the weight the equipment can lift in a winching mode, when the boom is static at a 30-degree elevation with the load lines vertical and the lifting cables sharing the load equally, measured with a live load (weight or load cell).

a. The structural design of the recovery equipment must have a higher load capacity than the performance rating(s).

b. Winches shall conform to or exceed the specifications set forth by the Society of Automotive Engineers (SAE) Handbook, SAE J706.

c. All ratings for cable and chain assemblies are for the undamaged assembly condition. All cable and chain assemblies should be the same type, construction, and rating as specified by the original equipment manufacturer (OEM) for the equipment.

F. Safety Chains

1. Safety chains shall be rated at no less than the rating specified by the OEM.

a. Two safety chains shall be used for vehicles being towed. The safety chains shall be securely affixed to the truck bed frame or wrecker boom, independent of the towing sling, bar or hitch, wheel lift, or under lift towing equipment. The towed vehicle shall be secured to the towing equipment independent of the safety chains by either two chains or two straps.

b. Vehicles being transported on slide back carriers shall be secured by four tie-down chains or straps independent of the winch or loading cable.

c. All safety connections and attachments shall have a positive means, of sufficient strength, to ensure that the safety connection or attachment cannot become disengaged while in transit.

G. Control/Safety Labels

1. All controls shall be clearly marked to indicate proper operation, as well as any special warnings or cautions.

H. Signs

1. All tow trucks shall display signs on both sides containing the operator's company name, business address, and telephone number. The signs shall be

permanently affixed and in compliance with the requirements of CVC section 27907.

I. Wire Rope (Cable)

1. Wire rope shall be maintained in good condition. Only wire rope with swaged ends, wedge locks, or braided ends, with metal sleeves in the loops, shall be approved for use by the RPD. Consistent with the California Code of Regulations, Title 13, Section 1305(b), wire rope is not in good condition when it is stranded, knotted, crushed, excessively rusty, chinked, badly worn, when there are 12 or more wires broken in lay length, or where there is other visible evidence of loss of strength.

II. TOW TRUCK CLASSIFICATIONS AND EQUIPMENT SPECIFICATIONS

A. The Operator shall maintain five (5) tow trucks during the term of the Agreement. Three trucks shall be Class A, one truck shall be Class B and one truck shall be a Class C. A truck of a higher class may be counted as a lower class truck on a one-to-one basis. All tow trucks shall be based and maintained in the City of Redlands.

B. Class A Tow Trucks

1. Minimum Equipment Specifications

a. 10,000-pound GVWR chassis.
b. 4-ton recovery equipment rating.
c. Hydraulic or mechanical winch(es).
d. 100 ft. 3/8" 6 x 19 cable or original equipment manufacturers (OEM) specifications.
e. Tow chains, 5/16" alloy or OEM specifications, J/T hook assembly.
f. Safety chains, 5/16" alloy or OEM specifications.
g. Tow sling rating 3,000 pounds, when equipped.
h. Wheel lift safety straps or equivalent mechanical device.
i. All required wheel safety straps, or equivalent wheel retention device, tie-down straps, and safety chains shall be used during towing operations.
j. Tow dolly.
k. One 3-ton snatch block.
l. Wheel lift rating - retracted. 3,000 pounds.
85" extension*. 3,000 pounds.

* Measured from the center line of the rear axle of the towing vehicle to 10 inches behind the back face of the lifting bar.

C. Class A Car Carrier - One Car

1. Minimum Equipment Specifications

a. 10,000-pound GVWR chassis.
b. Hydraulic or mechanical winch.
c. 50 ft. 3/8" 6 x 19 cable or OEM specifications.
d. J/T hook loading bridle/chains.
e. Safety chains, 5/16" alloy or OEM specifications; four safety chains for the vehicle being transported.
f. All required tie-down straps and safety chains shall be used as required during towing operations.

D. Class A Car Carrier - Two Cars

1. Minimum Equipment Specifications

a. 16,001-pound GVWR chassis.
b. Hydraulic or mechanical winch.
c. 50 ft. 3/8" 6 x 19 cable or OEM specifications.
d. J/T hook loading bridle/chains.
e. Safety chains 5/16" alloy or OEM specifications; four safety chains for the vehicle being transported and two safety chains for the vehicle being towed.

i. All required tie-down straps and safety chains shall be used during towing operations.

E. Class B Tow Truck

1. Minimum Equipment Specifications

a. 19,501-pound GVWR chassis.
b. Air brakes or hydraulic w/air hookup package.
c. 14-ton recovery equipment rating.
d. Hydraulic or mechanical winch(es).
e. 150 ft. 7/16" 6 x 19 cable or OEM specifications.
f. Tow chains, 1/2" alloy or OEM specifications.
g. Safety chains, 1/2" alloy or OEM specifications.
h. Tow sling rating 7,000 pounds.
i. Two 8-ton snatch blocks.
j. Wheel lift safety straps or equivalent mechanical device.

i. All required wheel safety straps, or equivalent wheel retention device, tie-down straps, and safety chains shall be used during towing operations.

k. Wheel lift or under lift rating retracted. ..... 10,000 pounds.
85" extension*. 8,000 pounds.

* Measured from the center line of the rear axle of the towing vehicle to 10 inches behind the back face of the lifting bar or from the center line of the rear axle to the center of the lift forks.

F. Class B Car Carrier

1. Minimum Equipment Specifications

a. 19,501-pound GVWR chassis.
b. Hydraulic or mechanical winch.
c. 50 ft. 3/8" 6 x 19 cable or OEM specifications.
d. J/T hook loading bridle/chains.
e. Safety chains, 5/16" alloy or OEM specifications; four safety chains for each vehicle being transported and two safety chains for the vehicle being towed.

1. All required tie-down straps and safety chains shall be used during towing operations.

G. Class C Tow Truck

1. Minimum Equipment Specifications

a. 33,000-pound GVWR chassis.
b. Air brakes w/air hookup package and single control compressor.
c. 25-ton recovery equipment rating.
d. Hydraulic or mechanical winch(es).
e. 200 ft. 5/8" 6 x 19 cable or OEM specifications.
f. Tow chains, 5/8" alloy or OEM specifications.
g. Safety chains, 5/8" alloy or OEM specifications.
h. Tow sling rating 12,000 pounds.
i. Two 12-ton snatch blocks.
j. Under lift rating - retracted. .....25,000 pounds.
100" extension*..... 12,000 pounds.

* Measured from the center line of the rear axle to the center of the lift forks.

H. Class D Tow Truck

1. Minimum Equipment Specifications

a. 50,000-pound GVWR chassis.

b. Air brakes w/air hookup package.
c. 300-ton recovery equipment rating.
d. Hydraulic or mechanical winch(es).
e. 250 ft. 3/4" 6 x 19 cable or OEM specifications.
f. Tow chains, 5/8" alloy or OEM specifications.
g. Safety chains, 5/8" alloy or OEM specifications.
h. Tow sling rating 20,000 pounds.
i. Two 12-ton snatch blocks.
j. Under lift rating - retracted. .....32,000 pounds.
100" extension*..... 16,000 pounds.

* Measured from the center line of the rear axle to the center of the lift forks.

III. AUXILIARY EQUIPMENT

A. Required Equipment All Classes

1. Extension - Brake and tail lamps.
2. Fire extinguisher (Approved 4-B, C rating or better).
3. Flashlight.
4. Broom.
5. Shovel.
6. Wrecking bar (large pry bar).
7. Reflective triangles.
8. Equivalent of six 30-minute flares.
9. Covered trash can(s) with absorbent.
10. Shop rags and/or paper towels.
11. Shop to truck communications (C/B and cellular phones excluded).

B. Service and Other Equipment - (For service calls, each tow truck shall be equipped with the following service equipment):

1. Adequate emergency supply of fuel in an approved container.
2. Booster battery or hot box starting system.
3. Hydraulic jack capable of handling passenger cars and light trucks.
4. Metric and standard lug wrenches.
5. Rubber mallet/hub cap tool.
6. Lockout tools.
7. Motorcycle straps (Class A only).
8. Sledgehammer.
9. Tool kit may include:

a. Assorted open end wrenches; standard, 1/4" - 7/8" and Metric, 6-19 mm.
b. Assorted screwdrivers; Straight blade and Phillips.

c. Crescent wrench.
d. Ball peen hammer.
e. Pliers.
f. Battery and terminal cleaning tools.
g. Mechanic's wire.
h. Plastic electrical tape/duct tape.
i. Tire valve core tool.
j. Miscellaneous fuses.
k. Small pry bar.
l. Socket Sets; 1/4" - 1" and 6-19 mm.
m. Ratchet and extensions.

C. Class A

1. Required Equipment

a. One 3-ton rated snatch block.
b. Towing sling - J/T hook tow chain assembly, a 4"x4"x48" and a 4"x4"x60" wooden crossbeam, a pair of spacer blocks, a steering wheel clamp, a towing dolly, and safety chains.
c. Wheel lift - Wheel safety straps or equivalent mechanical device, steering wheel clamp, towing dolly, and safety chains.
d. Car carrier - J/T hook loading bridle, a 4"x4"x48" and a 4"x4"x60" wooden crossbeam, a pair of spacer blocks, and two pairs of safety chains.

D. Class B

1. Required Equipment

a. Towing sling - J/T hook tow chain assembly, a 4"x4"x48" and a 4"x4"x60" wooden crossbeam, a pair of spacer blocks, a steering wheel clamp, a towing dolly, and safety chains.
b. Wheel lift - Wheel safety straps or equivalent mechanical device, steering wheel clamp, towing dolly, and safety chains.
c. Truck hitch - Tow chain assembly, 4"x4"x60" and 6"x6"x60" wooden crossbeams (as necessary), aluminum tow angle(s), and safety chains.
d. Under lift - Assortment of lift forks/adapters, safety tie-down chains, and safety chains.
e. Two 8-ton rated snatch blocks.
f. Axle covers/caps.
g. Air hoses and necessary fittings to provide air to the towed vehicle.

E. Classes C and D

1. Required Equipment

   a. Towing sling - Tow chain assembly, a 4"x4"x60" and a 6"x6"x60" wooden crossbeam, a pair of spacer blocks, a steering wheel clamp, and safety chains.
   b. Truck hitch - Tow chain assembly, 4"x4"x60" and 6"x6"x60" wooden crossbeams (as necessary), aluminum tow angle(s), and safety chains.
   c. Under reach - Assortment of lift forks/adapters, safety tie-down chain(s), and safety chains.
   d. Steering wheel clamp.
   e. Two 12-ton rated snatch blocks.
   f. Axle covers/caps.
   g. Air hoses and necessary fittings to provide air to the towed vehicle.

## ATTACHMENT "D"

Applicant's Instruction for Completing the CHP 234A and RPD 234B

I. GENERAL INFORMATION

A. The following instructions are being provided to assist you in the accurate completion of the necessary forms. Please be sure to sign and date the application form as indicated. You should thoroughly read and understand the Tow Service Agreement prior to submitting your application. After completing the application form (CHP 234A), return the entire package, along with the certificate of insurance as specified in Element 9 of the Tow Service Agreement, to the RPD for approval. Incomplete applications will not be accepted. If your company receives preliminary approval, an inspection of your facilities and equipment will be scheduled.

II. SPECIFIC INSTRUCTIONS FOR FORMS PREPARATION

A. Application for Rotation Tow Listing (CHP 234A)

1. Completely fill out and sign the CHP 234A. Incomplete applications will not be accepted. All information on the CHP 234A must be complete. Any misrepresentation on the application will be grounds for criminal and/or disciplinary action.

B. Rotation Tow List - Tow Truck Inspection Guide (RPD 234B)

1. Upon preliminary approval, the RPD will provide you with a CHP 234B, Tow Truck Inspection Guide for each tow truck.

2. You should complete the top section of the CHP 234B (Tow Truck Inspection Guide) with company and vehicle information prior to the scheduled inspection date.

3. The following instructions will assist you in preparing this section of the form:

a. Company name as it shows on application.
b. Year vehicle manufactured.
c. Make of vehicle.
d. Model of vehicle.
e. License number.
f. Vehicle identification number.
g. Gross vehicle weight rating as rated by the manufacturer.
h. Check the appropriate equipment type.

I. OPERATOR APPROVAL

I certify that I have read and understand this Tow Service Agreement and agree to abide by all provisions. I further warrant and represent that I have the authority to bind operator to the obligations under this Agreement.

I agree to indemnify, defend and save harmless the City of Redlands and its elected officials, officers, agents and employees from any and all claims and losses accruing or resulting from operator's or operator's officers, employees and agent's acts or omissions in connection with the performance of this Agreement, and from any and all claims and losses accruing or resulting from operator's or operator's officers, employees and agent's acts or omissions to any person, firm, or corporation who may be injured or damaged by the operator in the performance of this Agreement. The operator, and the operator's officers, employees and agents, in the performance of this Agreement, shall act in an independent capacity and not as officers or employees or agents of the City.

**OPERATOR APPROVAL**

| | | |
|---|---|---|
| Signature | Typed Name Abdallah Hasan | |
| Company Armada Towing | Title General Manager | Date 07/03/2025 |
| Business Address 2285 6th St; San Bernardino CA, 92410 | Phone Number 909-428-1115 | |

APPROVED:

Rachel Tolber, Chief of Police

Mario Saucedo, Mayor

ATTEST:

Jeanne Donaldson, City Clerk

I. OPERATOR APPROVAL

I certify that I have read and understand this Tow Service Agreement and agree to abide by all provisions. I further warrant and represent that I have the authority to bind operator to the obligations under this Agreement.

I agree to indemnify, defend and save harmless the City of Redlands and its elected officials, officers, agents and employees from any and all claims and losses accruing or resulting from operator's or operator's officers, employees and agent's acts or omissions in connection with the performance of this Agreement, and from any and all claims and losses accruing or resulting from operator's or operator's officers, employees and agent's acts or omissions to any person, firm, or corporation who may be injured or damaged by the operator in the performance of this Agreement. The operator, and the operator's officers, employees and agents, in the performance of this Agreement, shall act in an independent capacity and not as officers or employees or agents of the City.

**OPERATOR APPROVAL**

| | | |
|---|---|---|
| Signature: Pedro C. Ortiz | Typed Name: Pedro C. Ortiz | |
| Company: Pepes Towing Service | Title: Admin. manager | Date: 7-3-25 |
| Business Address: 1303 E. Victoria Ave. San Bernardino, CA 92408 | Phone Number: 951-682-5682 | |

APPROVED:

Rachel Tolber, Chief of Police

Mario Saucedo, Mayor

ATTEST:

Jeanne Donaldson, City Clerk

I. OPERATOR APPROVAL

I certify that I have read and understand this Tow Service Agreement and agree to abide by all provisions. I further warrant and represent that I have the authority to bind operator to the obligations under this Agreement.

I agree to indemnify, defend and save harmless the City of Redlands and its elected officials, officers, agents and employees from any and all claims and losses accruing or resulting from operator's or operator's officers, employees and agent's acts or omissions in connection with the performance of this Agreement, and from any and all claims and losses accruing or resulting from operator's or operator's officers, employees and agent's acts or omissions to any person, firm, or corporation who may be injured or damaged by the operator in the performance of this Agreement. The operator, and the operator's officers, employees and agents, in the performance of this Agreement, shall act in an independent capacity and not as officers or employees or agents of the City.

**OPERATOR APPROVAL**

| | | |
|---|---|---|
| Signature | Typed Name Garrett W. Mills | |
| Company Wilson Towing LLC | Title Manager | Date 7-3-25 |
| Business Address 2310 E 3rd St. San Bernardino, CA 92410 | Phone Number 909-888-5455 | |

APPROVED:

Rachel Tolber, Chief of Police

Mario Saucedo, Mayor

ATTEST:

Jeanne Donaldson, City Clerk

I. OPERATOR APPROVAL

I certify that I have read and understand this Tow Service Agreement and agree to abide by all provisions. I further warrant and represent that I have the authority to bind operator to the obligations under this Agreement.

I agree to indemnify, defend and save harmless the City of Redlands and its elected officials, officers, agents and employees from any and all claims and losses accruing or resulting from operator's or operator's officers, employees and agent's acts or omissions in connection with the performance of this Agreement, and from any and all claims and losses accruing or resulting from operator's or operator's officers, employees and agent's acts or omissions to any person, firm, or corporation who may be injured or damaged by the operator in the performance of this Agreement. The operator, and the operator's officers, employees and agents, in the performance of this Agreement, shall act in an independent capacity and not as officers or employees or agents of the City.

**OPERATOR APPROVAL**

| | | |
|---|---|---|
| Signature Mostafa Behrami | Typed Name Mostafa Behrami | |
| Company BRONCS TOWING INC | Title SECRETARY | Date 7/03/25 |
| Business Address 380 KANSAS ST KANSAS ST. 92373 | Phone Number (909) 307-0944 | |

APPROVED:

Rachel Tolber, Chief of Police

Mario Saucedo, Mayor

ATTEST:

Jeanne Donaldson, City Clerk

**City Council/Financing Authority Meeting** **I. 15.**

**DATE:** 09/16/2025

**TO:** Honorable Mayor and City Council Members

**SUBJECT:** Approve the agreement between the City and the Department of Alcoholic Beverage Control for the grant provided by the Alcohol Policing Partnership program; the additional appropriation of $42,648 in grant funds to the Police Department; and authorize the Chief of Police to sign and execute any necessary agreements related to the grant (Police Chief Tolber)

---

**MOTION(S):**

If the City Council determines that staff's recommendation is appropriate, the following motion is provided:

I move to approve the agreement between the City and the Department of Alcoholic Beverage Control (ABC) for the grant provided by the Alcohol Policing Partnership (APP) program; the additional appropriation of $42,648 in grant funds to the Police Department; and authorize the Chief of Police to sign and execute any necessary agreements related to the grant.

**RECOMMENDATION:**

Staff recommends the City Council approve the agreement between the City and ABC provided by the APP program; the additional appropriation of $42,648 in grant funds to the Police Department; and authorize the Chief of Police to sign and execute any necessary agreements related to the grant.

**DISCUSSION:**

The Department of ABC's Alcohol Policing Partnership grant program provides funding to local law enforcement agencies to expand efforts in addressing alcohol-related issues. This comprehensive program incorporates a variety of strategies aimed at reducing alcohol-related crimes. The project period runs from July 1, 2025, through June 30, 2026. During this time, grant funds will be used to: increase the hours officers have to enforce alcohol-related crimes, conduct minor decoy operations, conduct shoulder tap operations, and conduct IMPACT inspections at the "on-sale" and "off-sale" licensed locations.

**ALTERNATIVES:**

Do not accept the grant.

**STRATEGIC PLAN:**

N/A

**SUBMITTED BY:**
Rachel Tolber, Chief of Police

**RECOMMENDED BY:**
Charles M. Duggan Jr., City Manager

**REVIEWED BY:**
Janice McConnell, Assistant City Manager
Danielle Garcia, Management Services/Finance Director

**PREPARED BY:**
Jimmy Nguyen, Management Analyst

---

**Fiscal Impact**

| | |
|---|---|
| **Fiscal Year:** | 25-26 |
| **Revenue Generating:** | N |
| **Appropriation Required Y/N:** | Y |
| **Amount:** | $42,648 |
| **Budgeted Y/N:** | N |
| **Account No.:** | 200202 |
| **Discussion:** | |

This project is grant funded and will not impact the General Fund.

---

**Attachments**

Award Letter
ABC-APP Grant Agreement
Addt'l Appropriation

---

**DEPARTMENT OF ALCOHOLIC BEVERAGE CONTROL**
3927 Lennane Drive, Suite 100
Sacramento, CA 95834
(916) 419-2500

June 2, 2025

Chief Rachel Tolber
Redlands Police Department
30 Cajon Street
Redlands, CA 92373

Dear Chief Rachel Tolber:

Congratulations! Your agency has been selected by the Department of Alcoholic Beverage Control (ABC) to receive a 2025/2026 Alcohol Policing Partnership (APP) grant. We look forward to working with your department to meet the goals and objectives in your proposal.

A grant agreement will be forthcoming in the next couple of weeks which requires a resolution from your agency's governing body. A sample resolution was included in the Request for Proposal packet. ***Due to the fact that these resolutions typically have to be on your governing body's calendar, we ask that you do so as soon as possible.***

We will be hosting a two and half day training conference beginning at 8:30 am on July 15, 2025 and ending at approximately 12:00 pm on July 17, 2025. This conference offers valuable training in alcohol enforcement and serves as an excellent opportunity for the representatives from your agency to meet our ABC staff and share information with other law enforcement agencies from across the State.

This year the conference will be held at the Embassy Suites Anaheim South, 11767 Harbor Blvd., Garden Grove, CA 92840. The conference will accommodate up to two sworn attendees from each agency. It is recommended that your sworn Project Director and an officer/deputy assigned to the grant program attend. There is a $325 registration fee per person to attend the conference. This fee is reimbursable through the grant.

Enclosed is the conference registration form to be filled out and returned by **June 14, 2025**.

A block of rooms at a special conference rate of $189 plus tax/fees has been reserved for grant agency participants.[1] **Please note that all attendees must make**

[1] Based on State regulations we are unable to reimburse agencies that are within a 50 mile radius form the Embassy Suites Anaheim South. The distance is based on the agency's physical headquarters address. Agency(s) that fall in this category are: **Buena Park PD, Downey PD, Fontana PD, Fullerton PD, Huntington Park PD, Inglewood PD, Long Beach PD, Los Angeles PD, Ontario PD, Orange CO, Riverside PD, Upland PD/Claremont PD and Westminster PD**. Travel reimbursable costs for the aforementioned agency(s) will be limited to the registration fee only.

**reservations by the hotel deadline of June 14, 2025,** to guarantee the special room rate or availability**.**

Space at the hotel is limited and late registrants will have to find their own accommodations.

Participants can go to the following website to make reservations. https://www.hilton.com/en/attend-my-event/laxgdes-926-94195dc8-5c1b-403b-a075-e851ce54ec88/

Due to the short time frame for registering at the hotel, your prompt attention is appreciated. The special room rate will only be available until **June 14, 2025**, or until the group block is sold out, whichever comes first.

If you have any questions, please email Kristine Okino, Grant Coordinator at Kristine.okino@abc.ca.gov.

Sincerely,

Francisco (Frank) J. Robles
Chief Deputy Director

Enclosure

Cc: Ofc. Richard McLaughlin, Project Director

**SCO ID:** 2100-25APP36

STATE OF CALIFORNIA - DEPARTMENT OF GENERAL SERVICES

# STANDARD AGREEMENT

STD 213 (Rev. 04/2020)

| AGREEMENT NUMBER | PURCHASING AUTHORITY NUMBER (If Applicable) |
|---|---|
| 25-APP36 | ABC-2100 |

1. This Agreement is entered into between the Contracting Agency and the Contractor named below:

CONTRACTING AGENCY NAME
Department of Alcoholic Beverage Control

CONTRACTOR NAME
City of Redlands through the Redlands Police Department

2. The term of this Agreement is:

START DATE
July 1, 2025

THROUGH END DATE
June 30, 2026

3. The maximum amount of this Agreement is:
$ 42,648.00 Forty two thousand six hundred forty eight dollars and no cents

4. The parties agree to comply with the terms and conditions of the following exhibits, which are by this reference made a part of the Agreement.

| Exhibits | | Title | Pages |
|---|---|---|---|
| | Exhibit A | Scope of Work | 3 |
| | Exhibit B | Budget Detail and Payment Provisions | 2 |
| | Exhibit C * | General Terms and Conditions (GTC 02/2025) | 5 |
| + - | Exhibit D | Special Terms and Conditions | 1 |

*Items shown with an asterisk (*), are hereby incorporated by reference and made part of this agreement as if attached hereto.*
*These documents can be viewed at https://www.dgs.ca.gov/OLS/Resources*

*IN WITNESS WHEREOF, THIS AGREEMENT HAS BEEN EXECUTED BY THE PARTIES HERETO.*

## CONTRACTOR

CONTRACTOR NAME (if other than an individual, state whether a corporation, partnership, etc.)
City of Redlands through the Redlands Police Department

| CONTRACTOR BUSINESS ADDRESS | CITY | STATE | ZIP |
|---|---|---|---|
| 30 Cajon Street | Redlands | CA | 92373 |

| PRINTED NAME OF PERSON SIGNING | TITLE |
|---|---|
| Rachel Tolber | Chief of Police |
| CONTRACTOR AUTHORIZED SIGNATURE | DATE SIGNED |

## STATE OF CALIFORNIA

CONTRACTING AGENCY NAME
Department of Alcoholic Beverage Control

| CONTRACTING AGENCY ADDRESS | CITY | STATE | ZIP |
|---|---|---|---|
| 3927 Lennane Drive, Suite 100 | Sacramento | CA | 95834 |

| PRINTED NAME OF PERSON SIGNING | TITLE |
|---|---|
| Pattye Baker | Chief, Business Management Branch |
| CONTRACTING AGENCY AUTHORIZED SIGNATURE | DATE SIGNED |
| CALIFORNIA DEPARTMENT OF GENERAL SERVICES APPROVAL | EXEMPTION (If Applicable) |

# EXHIBIT A
# SCOPE OF WORK

## I. SCOPE OF WORK

- Contractor agrees to implement the Department of Alcoholic Beverage Control (ABC), Alcohol Policing Partnership program. This program is intended to work with law enforcement agencies to develop an effective, comprehensive and strategic approach to eliminate the crime and public nuisance problems associated with problem alcoholic beverage outlets.

- Contractor agrees to implement ABC's Minor Decoy, Shoulder Tap Programs and conduct Informed Merchants Preventing Alcohol-Related Crime Tendencies (IMPACT) Inspections. These programs target both ABC licensed premises and individuals who furnish alcoholic beverages to the underage operators. The project is targeted to reduce underage drinking and the resultant DUI driving injuries and fatalities, and/or property damages, reduce youth access to alcoholic beverages through the education of licensee(s), enforcement intervention and the impressions of omnipresence of law enforcement. In addition, Contractor agrees to the following goals:

  1. The operation period of the grant is July 1, 2025 through June 30, 2026.

  2. Contractor agrees to raise public awareness that selling, serving and/or furnishing alcoholic beverages to individuals under twenty-one years old is a criminal violation that will be prosecuted by local city and district attorneys.

  3. Minor Decoy operations are designed to educate and deter licensed locations from selling/furnishing alcohol to minors. Contractor agrees to conduct Minor Decoy Operations at both "On-Sale" and "Off-Sale" licensed establishments within the operation period of the grant.

  4. Shoulder Tap operations are used to detect and deter adult furnishers outside of a licensed business. Contractor agrees to conduct Shoulder Tap Operations at "Off-Sale" licensed locations to apprehend adults that are unaffiliated with the licensed businesses and who are purchasing alcohol for minors outside of the stores within the operation period of the grant.

  5. Informed Merchants Preventing Alcohol-Related Crime Tendencies (IMPACT) primary goal is to educate licensee's on alcohol related laws to help reduce alcohol-related crime in and around licensed premises. Contractor agrees to conduct visits and inspections of licensed premises identifying areas of non-compliance at "On-Sale" and "Off-Sale" licensed locations within the operation period of the grant.

## II. GOALS AND OBJECTIVES

1. Conduct at least four (4) Minor Decoy operations.

2. Conduct at least four (4) Shoulder tap operations, including the Statewide Shoulder tap operation.

3. Conduct at least four (4) IMPACT operations.

4. Conduct at least two (2) Trap Door operations.

5. Conduct at least three (3) Plain clothes or Uniformed Special Event operations.

6. Conduct at least three (3) Roll Call trainings.

7. Conduct at least one (1) Alcohol education/awareness presentation at each high school using a School Resource officer.

8. Produce at least two (2) educational videos to be released on Redlands PD social media accounts.

9. Advertise at least one (1) LEAD training.

10. Provide press/social media releases on grant enforcement activities.

    A. To announce the start of the program;
    B. At the conclusion of each Minor Decoy Operation has been held (to announce the number of licensed premises who sold to the minor decoy)
    C. At the conclusion of each Shoulder Tap Operation has been held (to announce the number of adults arrested for purchasing alcoholic beverages for the decoy).

11. Contractor will fax (916) 419-2599 or email each press release to the Department's Public Information Officer (pio@abc.ca.gov) as soon as it is released.

12. Contractor agrees in all press releases, in addition to any credits the agency wishes to give, will include the following statement: "This project is part of the Department of Alcoholic Beverage Control's Alcohol Policing Partnership."

Contractor agrees to complete and submit monthly reports, on a format designed and provided by the Department of Alcoholic Beverage Control due no later than 15th of the following month.

## III. PROJECT REPRESENTATIVES

The project representatives during the term of this agreement will be:

Redlands Police Department
Richard McLaughlin, Officer
30 Cajon Street
Redlands, CA 92373
(909) 798-7681
Rmclaughlin@redlandspolice.org

Department of Alcoholic Beverage Control
Aaron Perry, Supervising Agent in Charge
3927 Lennane Drive, Suite 100
Sacramento, CA 95834
(916) 419-5169
aaron.perry@abc.ca.gov

Direct all fiscal inquiries to:

Redlands Police Department
Jimmy Nguyen, Management Analyst
30 Cajon Street
Redlands, CA 92373
(909) 335-4751
jnguyen@redlandspolice.org

Department of Alcoholic Beverage Control
Kristine Okino, Grant Coordinator
3927 Lennane Drive, Suite 100
Sacramento, CA 95834
Kristine.okino@abc.ca.gov

# EXHIBIT B
# BUDGET DETAIL AND PAYMENT PROVISIONS

## I. INVOICING AND PAYMENT

- For services satisfactorily rendered and upon receipt and approval of the invoice, the Department of Alcoholic Beverage Control agrees to pay a monthly payment of approved reimbursable costs per the Budget Detail of personnel overtime and benefits (actual cost) and/or allowable costs.

- Invoices shall clearly reference this contract number (25-APP36) and must not exceed the contract total authorized amount of $42,648.00. Invoices are to be submitted by the 15th of every month, on the prescribed form designed by the Department of Alcoholic Beverage Control.

Submit to: Department of Alcoholic Beverage Control
Attn: Kristine Okino, Grant Coordinator
3927 Lennane Drive
Sacramento, California 95834

- Payment shall be made in arrears within 30 days from the receipt of an undisputed invoice. Nothing contained herein shall prohibit advance payments as authorized by Item 2100-101-3036, Budget Act, Statues of 2025.

- Contractor understands in order to be eligible for reimbursement; cost must be incurred on or after the effective date of the project, July 1, 2025 and on or before the project termination date, June 30, 2026.

- Revisions to the “Scope of Work” and the “Budget Detail” may be requested by a change request letter submitted by the Contractor. If approved, the revised Grant Scope of Work and/or Budget Detail supersedes and replaces the previous grant and will initiate an amendment. No revisions can exceed allotted amount as shown on the Budget Detail. The total amount of the grant must remain unchanged.

- Contractor agrees to refund to the State any amounts claimed for reimbursement and paid to Contractor which are later disallowed by the State after audit or inspection of records maintained by the Contractor.

- Only the costs displayed in the Budget Detail are authorized for reimbursement by the State to Contractor under this agreement. Any other costs incurred by Contractor in the performance of this agreement are the sole responsibility of Contractor.

- Title shall be reserved to the State for any State-furnished or State-financed property authorized by the State which is not fully consumed in the performance of this agreement. Contractor is responsible for the care, maintenance, repair, and protection of any such property. Inventory records shall be maintained by Contractor and submitted to the State upon request. All such property shall be returned to the State upon the expiration of this grant unless the State otherwise directs.

- Prior approval by the State in writing is required for the location, costs, dates, agenda, instructors, instructional materials, and attendees at any reimbursable training seminar, workshop or conference, and over any reimbursable publicity or educational materials to be made available for distribution. Contractor is required to acknowledge the support of the State whenever publicizing the work under this grant in any media.

## II. BUDGET DETAIL

| COST CATEGORY | TOTAL COST |
|---|---|
| **A. Personnel Services** | |
| Overtime | |
| Officer ($96.00/hourly) | $17,280.00 |
| Sergeant ($129.00/hourly) | $11,610.00 |
| Corporal ($108.00/hourly) | $9,720.00 |
| Benefits – 1.4% | $558.00 |
| **TOTAL Personnel** | **$39,168.00** |
| **B. Operating Expenses (receipts required)** | |
| Buy money | $480.00 |
| **TOTAL Operating** | **$480.00** |
| **C. Equipment (receipts required, must be purchased by 12/31)** | |
| n/a | $0.00 |
| **TOTAL Equipment** | **$0.00** |
| **D. Travel Costs** | |
| Registration, lodging, per diem | $3,000.00 |
| **TOTAL Travel** | **$3,000.00** |
| **GRANT TOTAL** | **$42,648.00** |

## III. BUDGET CONTINGENCY CLAUSE

- It is mutually agreed that if the Budget Act of the current year and/or any subsequent years covered under this Agreement does not appropriate sufficient funds for the program, this Agreement shall be of no further force and effect. In this event, the State shall have no liability to pay any funds whatsoever to Contractor or to furnish any other considerations under this Agreement and Contractor shall not be obligated to perform any provisions of this Agreement.

- If funding for any fiscal year is reduced or deleted by the Budget Act for purposes of this program, the State shall have the option to either cancel this Agreement with no liability occurring to the State, or offer an agreement amendment to Contractor to reflect the reduced amount.

## IV. PROMPT PAYMENT CLAUSE

- Payment will be made in accordance with, and within the time specified in, Government Code Chapter 4.5, commencing with Section 927.

# General Terms and Conditions (GTC 02/2025)

## EXHIBIT C

1. APPROVAL: This Agreement is of no force or effect until signed by both parties and approved by the Department of General Services, if required. Contractor may not commence performance until such approval has been obtained.

2. AMENDMENT: No amendment or variation of the terms of this Agreement shall be valid unless made in writing, signed by the parties and approved as required. No oral understanding or Agreement not incorporated in the Agreement is binding on any of the parties.

3. ASSIGNMENT: This Agreement is not assignable by the Contractor, either in whole or in part, without the consent of the State in the form of a formal written amendment.

4. AUDIT: Contractor agrees that the awarding department, the Department of General Services, the Bureau of State Audits, or their designated representative shall have the right to review and to copy any records and supporting documentation pertaining to the performance of this Agreement. Contractor agrees to maintain such records for possible audit for a minimum of three (3) years after final payment, unless a longer period of records retention is stipulated. Contractor agrees to allow the auditor(s) access to such records during normal business hours and to allow interviews of any employees who might reasonably have information related to such records. Further, Contractor agrees to include a similar right of the State to audit records and interview staff in any subcontract related to performance of this Agreement. (Gov. Code §8546.7, Pub. Contract Code §10115 et seq., CCR Title 2, Section 1896).

5. INDEMNIFICATION: Contractor agrees to indemnify, defend and save harmless the State, its officers, agents and employees from any and all claims and losses accruing or resulting to any and all contractors, subcontractors, suppliers, laborers, and any other person, firm or corporation furnishing or supplying work services, materials, or supplies in connection with the performance of this Agreement, and from any and all claims and losses accruing or resulting to any person, firm or corporation who may be injured or damaged by Contractor in the performance of this Agreement.

6. DISPUTES: Contractor shall continue with the responsibilities under this Agreement during any dispute.

7. TERMINATION FOR CAUSE: The State may terminate this Agreement and be relieved of any payments should the Contractor fail to perform the requirements of this Agreement at the time and in the manner herein provided. In the event of such termination the State may proceed with the work in any manner deemed proper by the State. All costs to the State shall be deducted from any sum due the Contractor under this Agreement and the balance, if any, shall be paid to the Contractor upon demand.

8. INDEPENDENT CONTRACTOR: Contractor, and the agents and employees of Contractor, in the performance of this Agreement, shall act in an independent capacity and not as officers or employees or agents of the State.

9. RECYCLING CERTIFICATION: The Contractor shall certify in writing under penalty of perjury, the minimum, if not exact, percentage of post-consumer material as defined in the Public Contract Code Section 12200, in products, materials, goods, or supplies offered or sold to the State regardless of whether the product meets the requirements of Public Contract Code Section 12209. With respect to printer or duplication cartridges that comply with the requirements of Section 12156(e), the certification required by this subdivision shall specify that the cartridges so comply (Pub. Contract Code §12205).

10. NON-DISCRIMINATION CLAUSE: During the performance of this Agreement, Contractor and its subcontractors shall not deny the contract's benefits to any person on the basis of race, religious creed, color, national origin, ancestry, physical disability, mental disability, medical condition, genetic information, marital status, sex, gender, gender identity, gender expression, age, sexual orientation, or military and veteran status, nor shall they discriminate unlawfully against any employee or applicant for employment because of race, religious creed, color, national origin, ancestry, physical disability, mental disability, medical condition, genetic information, marital status, sex, gender, gender identity, gender expression, age, sexual orientation, or military and veteran status. Contractor shall insure that the evaluation and treatment of employees and applicants for employment are free of such discrimination. Contractor and subcontractors shall comply with the provisions of the Fair Employment and Housing Act (Gov. Code §12900 et seq.), the regulations promulgated thereunder (Cal. Code Regs., tit. 2, §11000 et seq.), the provisions of Article 9.5, Chapter 1, Part 1, Division 3, Title 2 of the Government Code (Gov. Code §§11135-11139.5), and the regulations or standards adopted by the awarding state agency to implement such article. Contractor shall permit access by representatives of the Department of Fair Employment and Housing and the awarding state agency upon reasonable notice at any time during the normal business hours, but in no case less than 24 hours' notice, to such of its books, records, accounts, and all other sources of information and its facilities as said Department or Agency shall require to ascertain compliance with this clause. Contractor and its subcontractors shall give written notice of their obligations under this clause to labor organizations with which they have a collective bargaining or other agreement. (See Cal. Code Regs., tit. 2, §11105.)

    Contractor shall include the nondiscrimination and compliance provisions of this clause in all subcontracts to perform work under the Agreement.

11. CERTIFICATION CLAUSES: The CONTRACTOR CERTIFICATION CLAUSES contained in the document CCC 04/2017 are hereby incorporated by reference and made a part of this Agreement by this reference as if attached hereto.

12. TIMELINESS: Time is of the essence in this Agreement.

13. COMPENSATION: The consideration to be paid Contractor, as provided herein, shall be in compensation for all of Contractor's expenses incurred in the performance hereof, including travel, per diem, and taxes, unless otherwise expressly so provided.

14. GOVERNING LAW: This contract is governed by and shall be interpreted in accordance with the laws of the State of California.

15. ANTITRUST CLAIMS: The Contractor by signing this agreement hereby certifies that if these services or goods are obtained by means of a competitive bid, the Contractor shall comply with the requirements of the Government Codes Sections set out below.

    a. The Government Code Chapter on Antitrust claims contains the following definitions:

        1) "Public purchase" means a purchase by means of competitive bids of goods, services, or materials by the State or any of its political subdivisions or public agencies on whose behalf the Attorney General may bring an action pursuant to subdivision (c) of Section 16750 of the Business and Professions Code.

        2) "Public purchasing body" means the State or the subdivision or agency making a public purchase. Government Code Section 4550.

    b. In submitting a bid to a public purchasing body, the bidder offers and agrees that if the bid is accepted, it will assign to the purchasing body all rights, title, and interest in and to all causes of action it may have under Section 4 of the Clayton Act (15 U.S.C. Sec. 15) or under the Cartwright Act (Chapter 2 (commencing with Section 16700) of Part 2 of Division 7 of the Business and Professions Code), arising from purchases of goods, materials, or services by the bidder for sale to the purchasing body pursuant to the bid. Such assignment shall be made and become effective at the time the purchasing body tenders final payment to the bidder. Government Code Section 4552.

    c. If an awarding body or public purchasing body receives, either through judgment or settlement, a monetary recovery for a cause of action assigned under this chapter, the assignor shall be entitled to receive reimbursement for actual legal costs incurred and may, upon demand, recover from the public body any portion of the recovery, including treble damages, attributable to overcharges that were paid by the assignor but were not paid by the public body as part of the bid price, less the expenses incurred in obtaining that portion of the recovery. Government Code Section 4553.

    d. Upon demand in writing by the assignor, the assignee shall, within one year from such demand, reassign the cause of action assigned under this part if the assignor has been or may have been injured by the violation of law for which the cause of action arose and (a) the assignee has not been injured thereby, or (b) the assignee declines to file a court action for the cause of action. See Government Code Section 4554.

16. CHILD SUPPORT COMPLIANCE ACT: For any Agreement in excess of $100,000, the contractor acknowledges in accordance with Public Contract Code 7110, that:

    a. The contractor recognizes the importance of child and family support obligations and shall fully comply with all applicable state and federal laws relating to child and family support enforcement, including, but not limited to, disclosure of information and compliance with earnings assignment orders, as provided in Chapter 8 (commencing with section 5200) of Part 5 of Division 9 of the Family Code; and

    b. The contractor, to the best of its knowledge is fully complying with the earnings assignment orders of all employees and is providing the names of all new employees to the New Hire Registry maintained by the California Employment Development Department.

17. UNENFORCEABLE PROVISION: In the event that any provision of this Agreement is unenforceable or held to be unenforceable, then the parties agree that all other provisions of this Agreement have force and effect and shall not be affected thereby.

18. PRIORITY HIRING CONSIDERATIONS: If this Contract includes services in excess of $200,000, the Contractor shall give priority consideration in filling vacancies in positions funded by the Contract to qualified recipients of aid under Welfare and Institutions Code Section 11200 in accordance with Pub. Contract Code §10353.

19. SMALL BUSINESS PARTICIPATION AND DVBE PARTICIPATION REPORTING REQUIREMENTS:

    a. If for this Contract Contractor made a commitment to achieve small business participation, then Contractor must within 60 days of receiving final payment under this Contract (or within such other time period as may be specified elsewhere in this Contract) report to the awarding department the actual percentage of small business participation that was achieved. (Govt. Code § 14841.)

    b. If for this Contract Contractor made a commitment to achieve disabled veteran business enterprise (DVBE) participation, then Contractor must within 60 days of receiving final payment under this Contract (or within such other time period as may be specified elsewhere in this Contract) certify in a report to the awarding department: (1) the total amount the prime Contractor received under the Contract; (2) the name and address of the DVBE(s) that participated in the performance of the Contract; (3) the amount each DVBE received from the prime Contractor; (4) that all payments under the Contract have been made to the DVBE; and (5) the actual percentage of DVBE participation that was achieved. A person or entity that knowingly provides false information shall be subject to a civil penalty for each violation. (Mil. & Vets. Code § 999.5(d); Govt. Code § 14841.)

20. LOSS LEADER: If this contract involves the furnishing of equipment, materials, or supplies then the following statement is incorporated: It is unlawful for any person engaged in business within this state to sell or use any article or product as a "loss leader" as defined in Section 17030 of the Business and Professions Code. (PCC 10344(e).)

21. GENERATIVE AI DISCLOSURE OBLIGATIONS:

a. The following terms are in addition to the defined terms and shall apply to the Contract:

1) "Generative AI (GenAI)" means an artificial intelligence system that can generate derived synthetic content, including text, images, video, and audio that emulates the structure and characteristics of the system's training data. (Gov. Code § 11549.64.)

b. Contractor shall immediately notify the State in writing if it: (1) intends to provide GenAI as a deliverable to the State; or (2), intends to utilize GenAI, including GenAI from third parties, to complete all or a portion of any deliverable that materially impacts: (i) functionality of a State system, (ii) risk to the State, or (iii) Contract performance. For avoidance of doubt, the term "materially impacts" shall have the meaning set forth in State Administrative Manual (SAM) § 4986.2 Definitions for GenAI.

c. Notification shall be provided to the State designee identified in this Contract.

d. At the direction of the State, Contractor shall discontinue the provision to the State of any previously unreported GenAI that results in a material impact to the functionality of the System, risk to the State, or Contract performance, as determined by the State.

e. If the use of previously undisclosed GenAI is approved by the State, then Contractor will update the Deliverable description, and the Parties will amend the Contract accordingly, which may include incorporating the GenAI Special Provisions into the Contract, at no additional cost to the State.

f. The State, at its sole discretion, may consider Contractor's failure to disclose or discontinue the provision or use of GenAI as described above, to constitute a material breach of Contract when such failure results in a material impact to the functionality of the System, risk to the State, or Contract performance. The State is entitled to seek any and all remedies available to it under law as a result of such breach, including but not limited to termination of the contract.

# EXHIBIT D
# SPECIAL TERMS AND CONDITIONS

1. Disputes: Any disputes concerning a question of fact arising under this contract which is not disposed of by agreement shall be decided by the Director, Department of Alcoholic Beverage Control, or designee, who shall reduce his decision in writing and mail or otherwise furnish a copy thereof to the Contractor. The decision of the Department shall be final and conclusive unless, within 30 days from the date of receipt of such copy, the Contractor mails or otherwise furnishes to the State a written appeal addressed to the Director of the Department of Alcoholic Beverage Control. The decision of the Director of Alcoholic Beverage Control or his duly authorized representative for the determination of such appeals shall be final and conclusive unless determined by a court of competent jurisdiction to have been fraudulent, capricious, arbitrary, or so grossly erroneous as necessarily to imply bad faith, or not supported by substantial evidence. In connection with any appeal proceeding under this clause, the contractor shall be afforded an opportunity to be heard and to offer evidence in support of its appeal. Pending final decision of a dispute hereunder, Contractor shall proceed diligently with the performance of the contract and in accordance with the decision of the State.

2. Cancellation/Termination: This agreement may be cancelled or terminated without cause by either party by giving thirty (30) calendar days advance written notice to the other party. Such notification shall state the effective date of termination or cancellation and include any final performance and/or payment/invoicing instructions/requirements. No penalty shall accrue to either party because of contract termination.

3. Contract Validity: This contract is valid and enforceable only if adequate funds are appropriated in Item 2100-101-3036, Budget Act of 2025, for the purposes of this program.

4. Contractor Certifications: By signing this agreement, Contractor certifies compliance with the provisions of CCC 04/2017, Standard Contractor Certification Clauses. This document may be viewed at: https://www.dgs.ca.gov/OLS/Resources/Page-Content/Office-of-Legal-Services-Resources-List-Folder/Standard-Contract-Language

5. If the State determines that the grant project is not achieving its goals and objectives on schedule, funding may be reduced by the State to reflect this lower level of project activity and/or cancel the agreement.

# CITY OF REDLANDS
# REQUEST FOR ADDITIONAL APPROPRIATION

DATE OF REQUEST: _____

| FINANCE USE ONLY |
|---|
| TRANSACTION NO: _____ |
| ACCOUNTING PERIOD: _____ |

An additional appropriation is hereby requested as follows:

Department: _____

| EXPENDITURE APPROPRIATION INCREASE (if applicable) | | | | |
|---|---|---|---|---|
| **Account Description** | **Orgkey** | **Object Code** | **Job Ledger (If applicable)** | **Amount** |
| | | | | |
| | | | | |
| | | | | |
| | | | | |
| | | | | |
| | | | | $ - |

| REVENUE APPROPRIATION INCREASE (if applicable) | | | | |
|---|---|---|---|---|
| **Account Description** | **Orgkey** | **Object Code** | **Job Ledger (If applicable)** | **Amount** |
| | | | | |
| | | | | |
| | | | | |
| | | | | |
| | | | | |
| | | | | $ - |

JUSTIFICATION: _____

_____

_____

Requested By: _____
Department Head

Recommended By Finance Director:

Yes _____ No _____ Signed _____

Comments: _____

_____

_____

_____

_____

Recommended: _____
City Manager

Approved by City Council:

Date: _____

Signed: _____
City Clerk

**City Council/Financing Authority Meeting** **I. 16.**

**DATE:** 09/16/2025

**TO:** Honorable Mayor and City Council Members

**SUBJECT:** Accept the grant award from the Juvenile Justice Crime Prevention Act Program, and authorize an additional appropriation of $40,000 to the Police Department (Police Chief Tolber)

---

**MOTION(S):**

If the City Council determines that staff's recommendation is appropriate, the following motion is provided:

I move to accept the grant award from the Juvenile Justice Crime Prevention Act Program, and authorize an additional appropriation of $40,000 to the Police Department.

**RECOMMENDATION:**

Staff recommends that the Council accept the grant award from the Juvenile Justice Crime Prevention Act Program, and authorize an additional appropriation of $40,000 to the Police Department.

**DISCUSSION:**

In November 2024, the Redlands Police Department applied for $40,000 in Juvenile Justice Crime Prevention Act (JJCPA) grant funds through the San Bernardino County Probation Department. These funds will support an after-school program for local at-risk youth and youthful offenders.

The program is designed to promote physical fitness, social development, and mental well-being. Activities will include Go Ruck Tribe 'N Training, Jiu Jitsu instruction, and leadership development exercises. The goal is to engage participants in positive experiences that reduce the risk of justice system involvement. Program objectives include reducing bullying, building confidence, and fostering a more positive outlook for justice-involved youth, at-risk youth,

and their families.

All eligible program-related expenses will be reimbursed through the grant funds allocated by the San Bernardino County Probation Department.

**ALTERNATIVES:**

Do not accept the grant award, or approve additional appropriation in the amount of $40,000.

**STRATEGIC PLAN:**

Not applicable.

**SUBMITTED BY:**
Rachel Tolber, Chief of Police

**RECOMMENDED BY:**
Charles M. Duggan Jr., City Manager

**REVIEWED BY:**
Janice McConnell, Assistant City Manager
Danielle Garcia, Management Services/Finance Director

**PREPARED BY:**
Jimmy Nguyen, Management Analyst

---

**Fiscal Impact**

| | |
|---|---|
| **Fiscal Year:** | 2025-26 |
| **Revenue Generating:** | N |
| **Appropriation Required Y/N:** | Y |
| **Amount:** | $40,000 |
| **Budgeted Y/N:** | N |
| **Account No.:** | 200202 |

**Discussion:**
There will be no fiscal impact to the General Fund.

---

**Attachments**

Purchasing Contract
Approved MOU
Addt'l Appropriation

SAN BERNARDINO COUNTY | Purchasing

## Supplier

**Number:** 50000195
**Name:** CITY OF REDLANDS
**Address:** PO Box 3005
REDLANDS, CA 92373
USA
**Phone:** 909-798-7544
**Email:** ACCOUNTSRECEIVABLE@CITYOFREDLANDS.ORG

## Contract

**Contract Number:** 4400028821
**Smart Number:** 481-26-CON
**Contract Type:** Purchasing Contract
**Status:** Released
**Contact Person:** Iveth Herrera Zavala
**Phone:**
**Email:** IVETH.HERRERAZAVALA@PROB.SBCOUNTY.GOV
**Date:** 07/09/2025
**Timeframe:** 07/09/2025 to 01/14/2030
**Payment Terms:** Payable upon receipt without deductions
**Retention:** 0.00
**Incoterms:** Free On Board - DESTINATION

| Item | Prod/Cat | Description | Qty | Unit | Price | Discount | Tax | Ret. | Total |
|---|---|---|---|---|---|---|---|---|---|
| 1 | 46180000 | Program Supplies | 0 | EA | 0.00 | 0.00 | 0.00 | 0.00 | 0.00 USD |
| 2 | 86000000 | 30 Go Ruck Memberships for the year | 0 | | 0.00 | 0.00 | 0.00 | 0.00 | 0.00 USD |
| 3 | 80000000 | Motivational speakers throuout the year | 0 | | 0.00 | 0.00 | 0.00 | 0.00 | 0.00 USD |
| | | | | | | | | **Total Contract Value:** | **40,000.00 USD** |

APPROVED:

BY: Pete Mendoza, Director of Purchasing

THE INFORMATION IN THIS BOX IS NOT A PART OF THE CONTRACT AND IS FOR COUNTY USE ONLY

SAN BERNARDINO COUNTY

**Contract Number**
25-18

**SAP Number**

# PROBATION DEPARTMENT

| | |
|---|---|
| **Department Contract Representative** | **Jennifer Villa, Deputy Chief** |
| **Telephone Number** | 909-387-5874 |
| **Contractor** | Chair, JJCC |
| **Contractor Representative** | Chief of Probation |
| **Telephone Number** | 909-387-5874 |
| **Contract Term** | January 15, 2025 to January 14, 2030 |
| **Original Contract Amount** | |
| **Amendment Amount** | |
| **Total Contract Amount** | |
| **Cost Center** | 4810001000 |
| **Grant Number (if applicable)** | |

**Briefly describe the general nature of the contract:**

This Memorandum of Understanding is entered into by and among the San Bernardino County (County) Probation Department, County Sheriff/Coroner/Public Administrator, County District Attorney's Office, County Public Defender's Office, County Department of Children and Family Services, County Department of Behavioral Health, County Superintendent of Schools, and the City of Redlands Police Department, for the purpose of setting forth the roles and responsibilities of the agencies to ensure coordinated, timely, and comprehensive strategies for providing effective continuum of responses for the prevention, interpretation, supervision, community-based treatment and treatment of incarcerated juvenile offenders under the Juvenile Justice Crime Prevention Act (JJCPA) program.

**FOR COUNTY USE ONLY**

| Approved as to Legal Form | Reviewed for Contract Compliance | Reviewed/Approved by Department |
|---|---|---|
| ► Signed by: Maria Insiziengmay | ► | ► Signed by: Tracy Reece |
| Maria Insiziengmay, Deputy County Counsel | | Tracy Reece, Chief Probation Officer |
| Date 1/6/2025 | Date | Date 1/7/2025 |

**MEMORANDUM OF UNDERSTANDING**

**between the**

**San Bernardino County Probation Department**

**and**

**San Bernardino County Sheriff/Coroner/Public Administrator**

**and**

**San Bernardino County District Attorney's Office**

**and**

**San Bernardino County Public Defender's Office**

**and**

**San Bernardino County Department of Children and Family Services**

**and**

**San Bernardino County Department of Behavioral Health**

**and**

**San Bernardino County Superintendent of Schools**

**and**

**City of Redlands Police Department**

**for**

**Juvenile Justice Crime Prevention Act AB1913**

**January 14, 2025**

This Memorandum of Understanding (MOU), entered into by and among the San Bernardino County (County) Probation Department (Probation), County Sheriff/Coroner/Public Administrator (Sheriff), County District Attorney's Office (DA), County Public Defender's Office (Public Defender), County Department of Children and Family Services (CFS), County Department of Behavioral Health (DBH), County Superintendent of Schools (SBCSS), and the City of Redlands Police Department (Redlands PD) is for the purpose of setting forth the roles and responsibilities of the agencies to ensure coordinated, timely, and comprehensive strategies for providing effective continuum of responses for the prevention, interpretation, supervision, community-based treatment and treatment of incarcerated juvenile offenders are made under the Juvenile Justice Crime Prevention Act (JJCPA) program.

**BACKGROUND:** Government Code section 30061 and Welfare and Institutions Code (WIC) section 1961, as amended by AB 1998 (Ch. 880, Statutes of 2016), combined and established the planning and reporting requirements under the JJCPA and the Youthful Offender Block Grant (YOBG) programs.

The JJCPA program provides state funding for counties to implement programs that have proven effective in reducing crime and delinquency among at-risk youth and youthful offenders.

The YOBG program provides state funding for counties to deliver custody and care (i.e., appropriate rehabilitative and supervisory services) to youthful offenders who previously would have been committed to the California Department of Corrections & Rehabilitation, Division of Juvenile Justice.

The combined JJCPA-YOBG program has specific reporting requirements to the Office of Youth and Community Restoration (OYCR) including an annual JJCPA-YOBG operational plan (due by May 1 of each fiscal year) that combines all required programs, placements, strategies, services, and systems information into one consolidated document; and an annual JJCPA-YOBG Grant Expenditure and Data Report that provides expenditure detail for both JJCPA and YOBG as well as specified Countywide juvenile offender data (due October 1 of each fiscal year).

**WHEREAS,** this MOU outlines the shared obligations under JJCPA and WIC section 16521.6, including, but not limited to commitment to developing and implementing a continuation of Countywide responses to juvenile crime;

**WHEREAS,** WIC section 749.22 requires that each county establish a Juvenile Justice Coordinating Council (JJCC) that shall develop and implement a continuum of county-based responses to juvenile crime and is responsible for developing the County's Multi-Agency Local Action Plan to serve Juvenile-Justice Involved Youth.

**WHEREAS,** WIC section 749.22 establishes the Chief Probation Officer as the Chair of the JJCC and;

**WHEREAS,** the JJCC shall include, in addition to the agencies outlined in this MOU, a representative from the County Board of Supervisors, a community-based drug and alcohol program, a nonprofit community-based organization that provides services to youth in the County and an at-large community representative.

**WHEREAS,** this MOU does not replace or supersede the provisions of the JJCC bylaws.

**WHEREAS,** Probation, Sheriff, DA, Public Defender, CFS, DBH, SBCSS, Redlands PD, and the Juvenile Court are mandated, by WIC section 749.22, to share obligations under JJCPA requirements as outlined in the approved annual plan.

**NOW THEREFORE,** Probation, Sheriff, DA, Public Defender, CFS, DBH, SBCSS, Redlands PD and the Juvenile Court mutually agree to the following terms and conditions:

## TABLE OF CONTENTS


I. DEFINITIONS ..... 4

II. PURPOSE ..... 4

III. JJCC CHAIR (PROBATION) RESPONSIBILITIES ..... 4

IV. PARTNER AGENCIES RESPONSIBILITIES ..... 5

V. JJCC RESPONSIBILITIES ..... 5

VI. INDEMNIFICATION ..... 6

VII. INSURANCE ..... 6

VIII. CHOICE OF LAW ..... 6

IX. VENUE ..... 6

X. ASSIGNMENT ..... 6

XI. FISCAL PROVISIONS ..... 6

XII. TERM ..... 6

XIII. GENERAL PROVISIONS ..... 7

XIV. CONCLUSION ..... 7

## I. DEFINITIONS

A. Juvenile Justice Crime Prevention Act (JJCPA) – Provides funding pursuant to the Government Code § 30061, subdivision (b)(4) to address juvenile crime prevention and intervention needs within the County (formerly known as AB 1913).

B. Juvenile Justice Coordinating Council (JJCC) – A multi-agency council mandated by WIC section 749.22 to develop and implement a continuation of Countywide responses to juvenile crime.

C. JJCC Chair – The Chief Probation Officer (or designee) of the County Probation Department as authorized and mandated by WIC Section 749.22.

D. Partner Agencies (and separately referred to herein as "Public Agency") – The official public (governmental) organizations within the Juvenile Justice Coordinating Council (collectively Probation, Sheriff, DA, Public Defender, CFS, DBH, SBCSS, and Redlands PD) or separately as "Public Agency".

E. Subcontractors – All non-Partner Agencies including community based organizations or an at-large community member, if applicable, entering into an agreement with any of the Partner Agencies to receive funding and deliver ad hoc services in accordance with the JJCC Annual Operational Plan.

F. JJCPA Annual Operational Plan – A multi-agency plan that includes the requirements in Government Code section 30061, subdivision (b)(4) and that identifies the resources and strategies for providing an effective continuum of responses for the prevention, intervention, supervision, community-based treatment and treatment of incarcerated juvenile offenders, including strategies to develop and implement local out-of-home placement options for the offenders. The JJCPA Annual Operational Plan is due to the Board of State and Community Corrections by May 1st of each year

## II. PURPOSE

The purpose of this MOU is to enhance interagency collaboration and partnership by seeking increased coordination in the delivery of services to provide prevention, intervention, and re-entry services designed to serve at-risk and system involved youth and their families. This MOU outlines the partnership's responsibilities.

## III. JJCC CHAIR (PROBATION) RESPONSIBILITIES

The JJCC Chair (Probation) shall:

A. Operate in the capacity of Chair of the JJCC as defined in WIC Section 749.22 in coordination with the County Board of Supervisors.

B. Schedule and chair ongoing meetings at least quarterly, attended by all JJCC members to discuss topics pertinent to JJCPA affairs.

C. Develop the JJCPA Annual Operational Plan that identifies the resources and strategies for providing an effective continuum of responses to juvenile crime and submit the same to the OYCR annually by May 1, further, complete the annual JJCPA-YOBG Grant Expenditure and Data Report that provides expenditure detail for JJCPA and YOBG and specified Countywide juvenile offender data and submit the same to the County Board of Supervisors and the OYCR annually by October 1.

D. Develop an annual budget that incorporates appropriations and revenue sources for all activities outlined in the JJCPA Annual Plan including funding for special projects and subcontracted activities.

E. Develop and maintain a transparent and equitable system of allocation of funds for services and projects approved by the JJCC.

F. Ensure the appropriate utilization of JJCPA funding through consistent and effective audit functions of all appropriated funds to Partner Agencies and Subcontractors.

G. Provide ongoing administrative support and direction to Partner Agencies and in providing services to at-risk youth.

H. Promote reinvestment of any fiscal savings into identified gaps in services.

I. Ensure this MOU remains relevant and up-to-date.

## IV. PARTNER AGENCIES RESPONSIBILITIES

Each Partner Agency shall:

A. Provide at least one voting eligible representative at scheduled JJCC meetings and adhere to the JJCC bylaws.

B. Complete a required ethics training pursuant AB 1234 and Government Code section 18371 (a) (1) through (a)(4) once every two years and provide proof to the JJCC Chair.

C. Submit program funding proposals that align with the JJCPA Annual Operational Plan and meet the requirements of the JJCC project proposal request guidelines.

D. Make presentations of proposed programs to the JJCC for review and approval, including details of any necessary Sub-contractors, implementation plans, and accountability strategies.

E. Provide ongoing updates of funded programs to the JJCC, including statistics of populations served, outcome measures and unaccomplished items of the original proposal.

F. Ensure full compliance by Subcontractors to the requirements of the JJCPA Annual Operational Plan and JJCC project proposal request guidelines and perform regular audits to ensure accountability and transparency.

G. Submit to full accounting and programmatic audits by the JJCC of all program expenditures and program components including Sub-contractors' activities.

## V. JJCC RESPONSIBILITIES

The JJCC shall:

A. Review and approve (or otherwise) by voting, all program funding proposals presented by Partner Agencies.

B. Have the right to inspect all records pertaining to service delivery and all fiscal, statistical and management records of services. Full cooperation shall be given by all Partner Agencies and Sub-contractors in any auditing or monitoring conducted.

## VI. INDEMNIFICATION

Each Party Agency agrees to indemnify, defend (with counsel approved by the respective Partner Agency) and hold harmless the other Parties ("Indemnitees") and their authorized officers, employees, agents and volunteers from any and all claims, actions, losses, damages, and/or liability arising out of this MOU, but only to the extent actually caused by the negligent acts, errors or omissions of the indemnifying Party and its authorized officers, employees, agents, and volunteers, and for any costs or expenses incurred by Indemnitees on account of any claim except where such indemnification is prohibited by law.

If the Parties are determined to be comparatively at fault for any claim, action, loss, or damage which results from their respective obligations under this MOU, each Party shall indemnify the others to the extent of its comparative fault as determined in a legal action.

## VII. INSURANCE

Each of the parties to this MOU are authorized self-insured public entities for purposes of Professional Liability, General Liability, Automobile Liability and Workers' Compensation and warrant that through their respective programs of self-insurance, they have adequate coverage or resources to protect against liabilities arising out of the performance of the terms, conditions, or obligations of this MOU.

## VIII. CHOICE OF LAW

This MOU shall be governed by and construed according to the laws of the State of California.

## IX. VENUE

The parties acknowledge and agree that this MOU was entered into and intended to be performed in San Bernardino County, California. The parties agree that the venue of any action or claim brought by any party to this MOU will be the Superior Court of California, San Bernardino County, San Bernardino District. Each party hereby waives any law or rule of the court that would allow them to request or demand a change of venue. If any action or claim concerning this MOU is brought by any third party and filed in another venue, the parties hereto agree to use their best efforts to obtain a change of venue to the Superior Court of California, San Bernardino County, San Bernardino District.

## X. ASSIGNMENT

Without the prior written consent of all parties, the MOU is not assignable by any party.

## XI. FISCAL PROVISIONS

There shall be no financial remuneration to or from any party for any services provided under this MOU other than funding of JJCC approved programs.

## XII. TERM

This MOU is effective as of January 15, 2025, and expires January 14, 2030, but may be terminated earlier in accordance with provisions of Section XIII. C. of this MOU.

## XIII. GENERAL PROVISIONS

A. No waiver of any of the provisions of the MOU documents shall be effective unless it is made in a writing that refers to the provisions so waived and is executed by the JJCC. No course of dealing and no delay or failure of a Partner Agency in exercising any right under any MOU document shall affect any other or future exercise of that right or any exercise of any other right. A Partner Agency shall not be precluded from exercising a right by its having partially exercised that right or its having previously abandoned or discontinued steps to enforce that right.

B. Any alterations, variations, modifications, or waivers of the provisions of this MOU, unless specifically allowed in this MOU, shall be valid only when they have been reduced to writing, duly signed, and approved by the JJCC as an amendment to this MOU. No oral understanding or agreement not incorporated herein shall be binding on any of the Partner Agencies or Sub-contractors hereto.

C. The County reserves the right to terminate this MOU, for its convenience, with or without cause, with a thirty (30) day written notice of termination to the Partner Agencies. Such termination may include all or part of the services described herein.

## XIV. CONCLUSION

A. This MOU, consisting of nine (9) pages is the full and complete document describing services to be rendered by the Partner Agencies including all covenants, conditions, and benefits.

B. The signatures of the Partner Agencies affixed to this MOU affirm that they are duly authorized to commit and bind their respective Partner Agency to the terms and conditions set forth in this document.

C. This MOU, and if applicable, any subsequent amendments, may be executed in any number of counterparts, each of which so executed shall be deemed to be an original, and such counterparts shall together constitute one and the same MOU. The parties shall be entitled to sign and transmit an electronic signature of this MOU (whether by facsimile, PDF or other email transmission), which signature shall be binding on the party whose name is contained therein. Each party providing an electronic signature agrees to promptly execute and deliver to the other party an original signed MOU upon request.

**SIGNATURES ON NEXT PAGE**

SAN BERNARDINO COUNTY
PROBATION DEPARTMENT

_____
Tracy Reece, Chief Probation Officer
175 W. Fifth Street, 4th Floor
San Bernardino, CA 92415
Date: _____

SAN BERNARDINO COUNTY
SHERIFF/CORONER/PUBLIC ADMINISTRATOR

_____
Shannon D. Dicus, Sheriff-Coroner
655 East Third Street
San Bernardino, CA 92415
Date: _____

SAN BERNARDINO COUNTY
DISTRICT ATTORNEY'S OFFICE

_____
Jason Anderson, District Attorney
303 W. 3rd Street
San Bernardino, CA 92415
Date: _____

SAN BERNARDINO COUNTY
PUBLIC DEFENDER'S OFFICE

_____
Thomas W. Sone, Public Defender
323 W. Court Street
San Bernardino, CA 92415
Date: _____

SAN BERNARDINO COUNTY
CHILDREN AND FAMILY SERVICES

_____
Jeany Zepeda, Director
150 S. Lena Road
San Bernardino, CA 92415
Date: _____

SAN BERNARDINO COUNTY
DEPARTMENT OF BEHAVIORAL HEALTH

_____
Georgina Yoshioka, DSW, MBA, LCSW, Director
303 E. Vanderbilt Way
San Bernardino, CA 92415
Date: _____

SAN BERNARDINO COUNTY
SUPERINTENDENT OF SCHOOLS

_____
Myrlene Pierre, Assistant Superintendent
601 North E Street
San Bernardino, CA 92415
Date: _____

CITY OF REDLANDS
POLICE DEPARTMENT

Rachel Tol
Rachel Tolber, Chief of Police
30 Cajon Street
Redlands, CA 92373
Date: _____

SAN BERNARDINO COUNTY

► Dawn Rowe

Dawn M. Rowe , Chair, Board of Supervisors

Dated: JAN 14 2025

SIGNED AND CERTIFIED THAT A COPY OF THIS DOCUMENT HAS BEEN DELIVERED TO THE CHAIRMAN OF THE BOARD

Lynna Monell
Clerk of the Board of Supervisors
San Bernardino County

By _____ Deputy

# CITY OF REDLANDS
# REQUEST FOR ADDITIONAL APPROPRIATION

DATE OF REQUEST: _____

| FINANCE USE ONLY |
|---|
| TRANSACTION NO: _____ |
| ACCOUNTING PERIOD: _____ |

An additional appropriation is hereby requested as follows:

Department: _____

| EXPENDITURE APPROPRIATION INCREASE (if applicable) | | | | |
|---|---|---|---|---|
| **Account Description** | **Orgkey** | **Object Code** | **Job Ledger (If applicable)** | **Amount** |
| | | | | |
| | | | | |
| | | | | |
| | | | | |
| | | | | |
| | | | | $ - |

| REVENUE APPROPRIATION INCREASE (if applicable) | | | | |
|---|---|---|---|---|
| **Account Description** | **Orgkey** | **Object Code** | **Job Ledger (If applicable)** | **Amount** |
| | | | | |
| | | | | |
| | | | | |
| | | | | |
| | | | | |
| | | | | $ - |

JUSTIFICATION: _____

_____

_____

Requested By: _____
Department Head

Recommended By Finance Director:

Yes _____ No _____ Signed _____

Comments: _____

_____

_____

_____

_____

Recommended: _____
City Manager

Approved by City Council:

Date: _____

Signed: _____
City Clerk

**City Council/Financing Authority Meeting** **I. 17.**

**DATE:** 09/16/2025

**TO:** Honorable Mayor and City Council Members

**SUBJECT:** Approve the use of city resources and the request for in-kind support in the amount of $16,397.00 related to the Redlands Turkey Trot event hosted by Phoenix Hope International on November 27, 2025; approve temporary street closures related to the event; and determine that the event is categorically exempt from environmental review pursuant to Section 15311(c) of the State's guidelines implementing the California Environmental Quality Act (Facilities and Community Services Department Director Crocker)

---

**MOTION(S):**

If the City Council determines that staff's recommendations are appropriate, the following motions are provided:

1. I move that the City Council determine that the approval of the event is exempt from environmental review pursuant to Section 15311(c) of the State's guidelines implementing the California Environmental Quality Act;

2. I move to authorize the expenditure of city resources and in-kind support in the amount of $16,397.00 related to the Redlands Turkey Trot event hosted by Phoenix Hope International; and

3. I move to authorize the temporary street closures related to the event.

**RECOMMENDATION:**

Staff recommends that the City Council determine that authorization for the items associated with the Redlands Turkey Trot, scheduled on November 27, 2025, is exempt from environmental review pursuant to Section 15311(c) of the State's guidelines implementing the California Environmental Quality Act (CEQA). Staff further recommends that the City Council direct staff accordingly regarding the temporary street closures outlined in the staff report, and the expenditure of city resources and in-kind support in the amount of $16,397.00,

including costs for personnel, equipment, and related services.

**DISCUSSION:**

The Facilities and Community Services Department manages the administration and issuance of permits for special events held in public areas of the City. Upon the issuance of a special event permit, the event may take place contingent on the event organizer paying the required fees. The City recognizes the value of partnering with non-profit agencies and organizations to provide services beneficial to the community. In an effort to support programs that provide a community benefit, the City Council will, from time to time, consider the authorization of in-kind support including the use of city equipment, staff, and facilities for special events.

Phoenix Hope International is requesting in-kind support in the amount of $16,397.00 and temporary closure of Colton Ave between Division Street and Grove St, Division St. between E Colton St. and Park Ave, E Park Ave. between Division Street and University Street, N University Street between E Park Ave and Cornell Ave, Sylvan Blvd between N University St and N Grove St, N Grove St between Sylvan Blvd and E Brockton Ave, E Brockton Ave, between N Grove St, and N University St, from the hours of 5:00 a.m. to 11:00 a.m. as well as the reservation of Sylvan Park for the duration of the event.

Phoenix Hope International is a non-profit organization operating out of the City of Mesa, Arizona. According to the submitted application, this will be the 11th year Phoenix Hope International has partnered with the City of Redlands for this event. In celebration of the 11th Annual Redlands Turkey Trot, Phoenix Hope International is partnering with Inland Harvest in hopes of collecting 10,000 lbs of food. All canned goods donated will go to local non-profit agencies that provide food for needy populations and all proceeds from this year's event will benefit Redlands Schools and local charities. The City previously approved in-kind support, in 2024, in the amount of $14,536.00 for the annual Redlands Turkey Trot hosted by Phoenix Hope International.

The event is exempt from the requirements of the California Environmental Quality Act’s guidelines pursuant to Section 15311(c). Section 15311(c), accessory structures Class 11 facilities, consists of construction, or replacement of minor structure accessory to existing commercial, industrial, or institutional facilities, including placement of seasonal or temporary use items such as mobile food units, portable restrooms or similar items in generally the same locations from time to time in publicly owned parks or other facilities designed for public use.

**ALTERNATIVES:**

The City Council may elect to deny the request for in-kind support, deny the request for temporary street closure and direct staff accordingly.

**STRATEGIC PLAN:**

Priority A - Quality of Life, Beautification, Arts and Culture.

**SUBMITTED BY:**
Tabitha Crocker, Facilities and Community Services Department Director

**REVIEWED BY:**
Charles M. Duggan Jr., City Manager
Janice McConnell, Assistant City Manager
Christopher Boatman, Assistant City Manager
Danielle Garcia, Management Services/Finance Director

**PREPARED BY:**
Jaclyn Ramirez, Administrative Assistant II

---

**Fiscal Impact**

| | |
|---|---|
| **Fiscal Year:** | 2025/26 |
| **Revenue Generating:** | N |
| **Appropriation Required Y/N:** | N |
| **Amount:** | $16,397.00 |
| **Budgeted Y/N:** | N |
| **Discussion:** | |

Please see the "Fiscal Impact" attachment for reference.

---

**Attachments**

Special Event Packet
In-Kind Request
Event Maps (Traffic Plans)
Verification of Non-Profit
Street Closure Permit
Fiscal Impact

---

City of Redlands
35 Cajon Street, Ste. 222
Redlands, CA 92373
(909) 798-7655 ext 3

# SPECIAL EVENTS PERMIT APPLICATION

**EVENT:** Redlands Turkey Trot

**ORGANIZER:** Phoenix Hope International

Date of Event: 11 / 27 / 2025

Date Submitted: 11 / 11 / 11

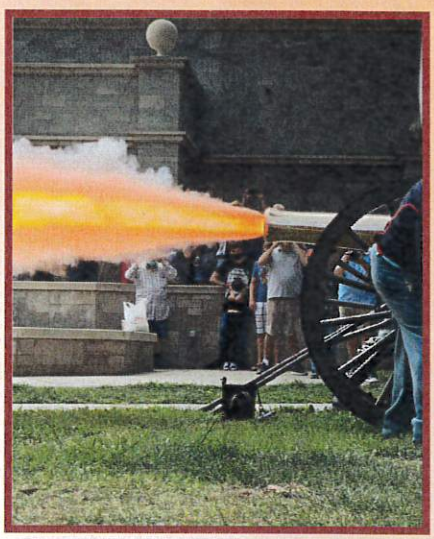

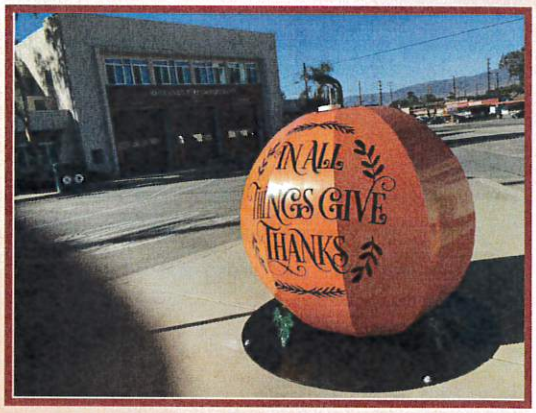


## NOTICE TO PERMIT APPLICANT

- Completed Special Event Permit Applications **must** be submitted to the Facilities & Community Services Department a **minimum of four (4) months prior** to the date the event is scheduled to begin.
- All forms in this application package that are relevant to your event must be complete and submitted together in order to be considered.
- Applicants must conform to all requirements for maintaining liability insurance.
- Incomplete applications or applications submitted past the deadline are subject to denial of request to hold event.

# APPLICATION PROCESS

**STEP 1 – Review Application Packet**
The Special Events Application Packet has been designed to assist event organizers and will help with the development of event plans that comply with local codes, laws, policies and regulations governing activities associated with the production and management of special events. By applying to schedule a special event, you and your representatives agree you have the sole responsibility at all times to be knowledgeable about, fully understand, and to meet or exceed all local and state codes, laws, policies, and regulations associated with the proposed event and its related activities.

**STEP 2 – Assess Venue**
As an event organizer it is your responsibility to assess the venue, anticipated attendees, and event components of your proposed event prior to submitting the applications for the various permits. It is important to develop management strategies that ensure the safety of your guests, citizens, and the surrounding environment affected by your event.

**STEP 3 – Submit Application**
The City of Redlands requires permit applications to be submitted no later than ninety (90) days prior to the actual date of your event and allows applications to be submitted as early as six (6) months before the event date. At the sole discretion of the City of Redlands, you may be authorized to submit written amendments to your initial permit application due to unique or changing circumstances related to the event. Amendments to your permit application must be submitted to the One Stop Permit Center no later than 14 days prior to your event.

All Applications Must Be Complete. The City of Redlands is not required to act upon an incomplete permit application. A permit application will not be approved or denied and you will not have requested venues reserved or held if you have not provided the required information. It is therefore important to provide all required information and documentation in a timely and complete manner. For an application to be considered complete, applicants must submit the following minimum information required in sufficient detail that the material can be understood and assessed: (there is a checklist form on page 13 to aid in the process).

- Special Events Permit Application with Site Plan
- Street Closure Permit with Route Map – if applicable
- Barricade Rental Form – if Street Closures requested
- Request to Serve Alcohol Permit form with Site Plan – if applicable
- Submit all required Certificates of Liability Insurance

**STEP 4 – Review Process**
After submitting your complete application and forms, your application will be reviewed by those departments involved with your requests in which fees and deposits will be determined. Departments may place conditions on your event, for example, solid waste requirements or specific parking plans.

**STEP 5 – Submit Fees and Finalize Details**
Once a Special Event Packet has been reviewed and approved; fees are due. A Coordination Meeting will be scheduled approximately two weeks prior to the event consisting of the Event Organizer(s) and representatives from supporting departments to settle/confirm final details.

# SUMMARY OF EVENT

**Event Title** Redlands Turkey Trot

**Description** Running race in Redlands on Thanksgiving morning. 5k distance for most participants and a 1K race for children under 12. All proceeds go to charitable organizations with 50% of proceeds going to Redlands schools and the Redlands Educational Partnership foundation.

**Date/Time**

| | | | |
|---|---|---|---|
| Setup | Date 11/26/2025 | Time 3 pm | Location(s) Streets near University of Redlands |
| Event Starts | Date 11/27/2025 | Time 7:30 am | Location(s) Streets near U of R |
| Event Ends | Date 11/27/2025 | Time 10 am | Location(s) Streets near U of R |
| Dismantle | Date 11/27/2025 | Time 10-11 am | Location(s) Streets near U of R |

*Submit a Site Plan for each venue listed

**Anticipated Attendance**: Total 3500 Per Day 3500

**Anticipated Participants**: Total 3000 Per Day 3000

**CONTACTS Person(s) or Agent(s) responsible for and authorized to represent this event on all matters:**

| | Primary Contact: | Secondary Contact |
|---|---|---|
| Name: | Kent Sommer | Matt Sommer |
| Address: | 625 Ranch Lane | 14215 Bounty Way |
| City, State, Zip | Glendora, CA 91741 | Poway, CA 92064 |
| Phone: | 714-614-7321 | 858-888-0218 |
| Email: | kentsommer@gmail.com | matt.sommer@gmail.com |

Name of Organization: Phoenix Hope International Is it Non-Profit? Yes

Tax I.D. #:

| Yes | No | |
|---|---|---|
| ● | ○ | Is this an annual event? How many years have you been holding this event? 11 years |
| X | ○ | Street Closure(s) requested? If yes, please complete Street Closure Permit Application and Barricade Rental Form in Appendix A |
| ○ | X | Does this event involve a parade? Please complete Parade/Public Assemblies Permit Application form in Appendix A |
| ○ | X | Will you be serving alcohol? If yes, please complete both Alcohol Permit forms in Appendix A |
| ○ | X | Are you requesting use of the Prospect Park Sign? If yes, please complete the Sign Request form in Appendix A |
| ○ | X | Are you requesting use of the City Stage? If yes, please complete the Show Mobile Rental form in Appendix A |
| X | ○ | Vendor(s)? If yes please complete the Vendor List in Appendix A. |

# SITE PLAN

Your event site plan/route map should include but not be limited to:

- ❑ An outline of the entire event venue including the names of all streets or areas that are part of the venue and the surrounding area. If the event involves a moving route of any kind, indicate the direction of travel and all street or lane closures.
- ❑ The location of fencing, barriers and/or barricades. Indicate any removable fencing for emergency access.
- ❑ The provision of minimum twenty foot (20') emergency access lanes throughout the event venue.
- ❑ The location of first aid facilities and ambulances.
- ❑ The location of all stages, platforms, scaffolding, bleachers, grandstands, canopies, tents, portable toilets, booths, beer gardens, cooking areas, trash containers and dumpsters, and other temporary structures.
- ❑ A detail or close-up of the food booth and cooking area configuration including booth identification of all vendors cooking with flammable gases or barbecue grills
- ❑ Generator locations and/or source of electricity.
- ❑ Placement of vehicles and/or trailers.
- ❑ Exit locations for outdoor events that are fenced and/or locations within tents and tent structures.
- ❑ Identification of all event components that meet accessibility standards.
- ❑ A parking and/or shuttle plan for events that are likely to exceed parking lot capacity of the space you are using.
- ❑ Other related event components not listed above.

# TIMELINE

Please provide a narrative and timeline of your event. You may provide this information as an attachment if necessary.

| HOUR | ACTION |
|---|---|
| See traffic plan attachment | |
| | |
| | |
| | |
| | |
| | |
| | |
| | |
| | |
| | |

# ACCESSIBILITY PLAN

This checklist is intended to serve as a planning guideline and may not be inclusive of all City, County, State and Federal access requirements. You may attach more detailed information if necessary.

YES NO

- ☐ ☐ Will there be a Clear Path of Travel throughout your event venue? Please describe _
  See traffic plan. Entire Course is on city streets and accessible to all individuals

- ☐ ☐ Have you developed a Disabled Parking and/or Transportation Plan (including the use of public transportation or shuttle services) for your event? Please describe
  Handicap parking available in all parking lots near start/finish line. No shuttle services

- ☐ ☐ Will a minimum of 10% of portable rest rooms at your event be accessible? Please describe
  Yes

- ☐ ☐ Will all food, beverage and vending areas be accessible? Please describe
  Food beverage areas are located at the finish line and accessible to all.

- ☐ ☐ Will all signage be provided in highly contrasting colors and placed so pedestrian flow will not obstruct its visibility? Please describe
  Neon event tape used to direct runners and event participants and is unobstructed by pedestrians.

- ☐ ☐ If telephones are provided, will at least one telephone at each phone bank have a volume control and is hearing aid compatible? Please describe N/A

- ☐ ☐ If an information center is provided at your event will customer service representatives be available to assist disabled individuals? Please describe
  Individuals at info booth are able to assist

- ☐ ☐ If all areas of your event venue cannot be made accessible will maps or programs be made available to show the location of accessible rest rooms, parking, phones (if any), drinking fountains, and first aid stations? Please describe All areas are accessible.

# RESTROOM FACILITIES PLAN

You are required to provide portable rest room facilities at your event, unless you can substantiate the sufficient availability of both ADA accessible and non-accessible facilities in the immediate area of the event site which will be available to the public during your event. Indicate on your timeline when portable toilets will be set up.

Yes No

- ☐ ☐ Do you plan to provide portable rest room facilities at your event?

If yes: Total number of portable toilets 20

If no: Please explain: _

Rest Room Company United Site Services

Address Street 2323 W Baseline Road

City San Bernardino State CA Zip 92410

Telephone Day 1-800-toilets Evening _ Fax _ Pager/Cellular _

# LIST OF VENDORS

Please provide a list of vendors, what they are there for and their business license numbers. Keep in mind that this list of vendors cannot change after the event has been approved. All must have a Redlands business license in order to participate with your event. If you need more entries, please attach a list with the same information to your event package. Vendors include all businesses either performing a service or selling at your event. All food concessioners must meet the San Bernardino Counties Department of Public Health Food Handler's and Fire Suppression requirements.

Yes No

- ☐ ☒ Will items or services be sold at your event?
- ☒ ☐ Will you have some education only (not selling a product or service) booths?
- ☐ ☒ Will items or services sold at your event present unique liability issues (e.g. massage, etc.)?
- ☐ ☒ Does your event include food concession and/or preparation areas?
- ☐ ☒ Do you intend to cook food in the event area?

  If yes, please specify method:

  - ☐ Gas
  - ☐ Electric
  - ☐ Charcoal
  - ☐ Other (specify) _____

| VENDOR | SERVICE THEY ARE PROVIDING | REDLANDS BUSINESS LICENSE NUMBER | EDUCATIONAL INFORMATION ONLY? (Y/N) |
|---|---|---|---|
| Phoenix Hope International | | | Y |
| Redlands Educational Partnership | | | Y |
| | | | |
| | | | |
| | | | |
| | | | |
| | | | |
| | | | |
| | | | |
| | | | |
| | | | |
| | | | |
| | | | |
| | | | |
| | | | |
| | | | |
| | | | |

# ENTERTAINMENT PLAN

YES NO

☐ ☒ Are there any musical entertainment features related to your event?

If yes, complete the following information or provide an attachment listing all bands/performers, type of music, sound check and performance schedule.

Number of Stages _____

Number of Performers/Bands _____

Performer/Band name and music type _____

☐ ☒ Will sound checks be conducted prior to the event?

If yes, Start time_____ Finish time_____

☒ ☐ Will sound amplification be used?

If yes, Start time 7:30 am Finish time 10 am

☐ ☒ Do you plan to have a patron dance component to either live or recorded music at your event?

If yes, please describe _____

☒ ☐ Please describe the sound equipment that will be used for your event _____

Speaker system at start/finish line to announce start of race and finishers

☐ ☒ Will inflatables, such as jumpers, or similar devices be used at your event?

If yes, please describe _____

☐ ☒ Does your event include the use of fireworks, rockets, lasers, or other pyrotechnics?

If yes, please fill out a fireworks permit also located in this packet.

If yes, please describe _____

☒ ☐ Will your event include the use of any signs, banners, decorations, or special lighting?

If yes, please describe _____

☐ ☒ Will there be massage activities at your event? If yes, please describe_____

☒ ☐ Do your event plans include any, drawings or raffle opportunities?

If yes, please describe _____

# ALCOHOL

Please Note: You will need to have your alcohol permit approved by Redlands city council prior to your event. A copy of your Alcohol license will be needed after city council approval, before the event.

Yes No

☐ ☒ Does your event involve the use of alcoholic beverages?

If yes, please check all that apply:

- ☐ Free/Host Alcohol
- ☐ Alcohol Sales
- ☐ Host and Sale Alcohol
- ☐ Beer
- ☐ Beer and Wine
- ☐ Beer, Wine and Distilled Spirits

Please describe your security plan to ensure the safe sale or distribution of alcohol at your event. _____

# MITIGATION OF IMPACT

YES NO

☒ ☐ Have you met with the residents, businesses, places of worship, schools and other entities that may be directly impacted by your event? If yes, please attach a complete list of these entities.

If no, please explain _____

☒ ☐ Do you have a sample of the notice that you propose to distribute two weeks prior to your event? If yes, please attach.

If no, please explain _____

# MARKETING AND PUBLIC RELATIONS

Yes No

☒ ☐ Will this event be marketed, promoted, or advertised in any manner?

f yes, please describe online marketing through emails to past participants, flyers to children in schools, banners on street

☐ ☒ Will there by live media coverage during the event?

f yes, please describe Unknown. None anticipated

☐ ☒ Will media vehicles be parked within the event venue?

f yes, please describe safety plan

☐ ☒ Do you have a plan to control or limit the placement and/or distribution of promotional signage, stickers, and other items?

f yes, please describe

# INSURANCE REQUIREMENTS

Regardless of the event you are required to have insurance that indemnifies the city of Redlands listing the location date and time.

Name of Insurance Agency Insurance Management Group

Address Street

City State Zip

Telephone Day Evening Fax Pager/Cellular

Contact Name

Policy Type

Policy Amount

Policy Number

# AFFIDAVIT OF APPLICANT

I certify that the information contained in the foregoing application is true and correct to the best of my knowledge and belief that I have read, understand and agree to abide by the rules and regulations governing the proposed Special Event under the Redlands Municipal Code and I understand that this application is made subject to the rules and regulations established by the City Council and/or the City Manager or the City Manager's designee. Applicant agrees to comply will all other requirements of the City, County, State, Federal Government, and any other applicable entity which may pertain to the use of the Event venue and the conduct of the Event. In the event that a possessory interest subject to property taxation is created by virtue of this use permit, I agree to pay all possessory interest taxes and the City shall not be liable for the payment of such taxes I further agree that the payment of any such taxes shall not reduce any consideration paid to the City pursuant to this use permit. I agree to abide by these rules, and further certify that I, on behalf of the Host Organization, am also authorized to commit that organization, and therefore agree to be financially responsible for any costs and fees that may be incurred by or on behalf of the Event to the City of Redlands.

Print Name of Applicant/Host Organization Kent Sommer/Phoenix Hope International

Title Board Member

Signature Kent Sommer

Date 6/16/2025

Print Name of Professional Event Organizer _____

Title _____

Signature _____

Date _____

# City of Redlands

## *In-Kind Support Request*

**Event Name:** Redlands Turkey Trot

**Event Date(s):** 11/27/2025 **Location(s):** Area around University of Redlands

**Rain Out Date:** None **Beginning Time:** 7:30 am **End Time:** 10 am

**Describe Your Request:**

*This completed form with all supporting documentation shall be submitted a minimum of 60 days prior to the scheduled event. Additional information may be attached to this application form, as needed.*

Request for waiver of City fees associated with hosting this running event in Redlands, CA.

**Select and Describe All City Provided Services That May Apply to Your Request :**

- [x] Traffic (*Personnel, equipment, cones, barricades, no-parking* — Barricades used for street closure
- [x] Police (*Public Safety Personnel)* — Officers used for event monitoring and street closures
- [ ] Fire (*Paramedics, Inspectors)*
- [x] Parks *(Cleanup Personnel, Ball Field Lights)* — Park Reservation, Personnel
- [x] Facility — Event receptacles used for trash services

Refuse/Recycling *(Event Receptacles, Roll-Off Service)* acquired by Event Organizers through Redlands Customer Service

*Section 13.65 of the Redlands Municipal Code requires that events that serve more than 2,000 individuals per day will be required to submit for review and approval a Large Venue Recycling Plan. The Quality of Life Department may require smaller events to comply with City recycling practices as a condition of waiving fees.*

- [ ] Other

**Group/Organization Name:** Phoenix Hope International

**Is your Group/Organization a Registered Non-Profit:** [x] Yes [ ] No **Non-Profit Federal Tax ID Number:**

**Does your Group/Organization Presently Have Liability Insurance?** [x] Yes [ ] No

*Please be advised that depending upon your request, you may be required to provide proof of insurance coverage in an amount determined by the City and naming the City as an additional insured.*

**Has your Group/Organization received fee waivers from the City in the past?** Yes

**Primary Contact Name & Title:** Kent Sommer, Board Member

**Mailing Address:** 625 Ranch Lane, Glendora, CA 91741

**Phone Number:** 714-614-7321 **E-Mail Address:** kentsommer@gmail.com

***As a part of our commitment to fiscal responsibility, the City of Redlands gathers data associated with the economic and social benefits associated with in-kind support. Please provide estimates, as applicable, for your event.***

**Positive outcomes for your organization from this**

Our organization would be able to use more of the event proceeds to further our mission and goals, which includes building up schools, health clinics and other needed services in Guatemala and Nigeria.

**Describe what economic benefit and impact this event will bring to the City:**

Half of the event proceeds are donated to Redlands based organizations and charities. In the past we have donated much of the proceeds to the Redlands Educational Partnership (REP) which then utilizes the funds for the various projects they provide to the schools in Redlands. The race operating costs and city fees are paid from the event proceeds. If we did not have to pay those costs because they were waived by the City, we would be able to donate more of our proceeds to the aforementioned charities.

*In April 2002, the City Council adopted Resolution No. 6038, which encourages groups or organizations requesting in-kind support from the City to use local businesses when procuring goods and services associated with the event. Receipts will need to be submitted through a follow up form. Failure to submit post event documentation (within 15 days) may affect future requests.*

| | Proposed Event | Previous Event Actuals | Vendors |
|---|---|---|---|
| **Attendance: Redlands Residents** | 2000 | 2000 | 1 |
| **Attendance: Non-Residents** | 1200 | 1200 | 0 |
| **Food & Beverage Sales** | $1000 | $1000 | $1000 |
| **Merchandise Sales** | $250 | $250 | None |
| **Ticket/Entrance Fees** | $30/adult; $15/ child | $30/adult; $15/child | None |
| **Other** | None | None | None |
| **Total Revenue** | $80,000 | $80,000 | $1000 |

***I certify that all statements on this application are true and complete to the best of my knowledge.***

**Signature:** Kent Sommer **Title:** Board Member

**Please Print Your Name:** Kent Sommer **Date:** 6/16/2025

***To Be Completed by the City of Redlands***

**Date Received:** 06/17/2025 **Received By:** Jaclyn Ramirez

**Notes:**

City Manager Approval: City Council Approval:

# REDLANDS TURKEY TROT

Thursday, November 27, 2025

8 a.m.

# Traffic Plan

Phoenix Hope International

# Event Information

## Event Organizer: Phoenix Hope International

**Race Contact: Kent Sommer**
**(714) 614-7321**
**kentsommer@gmail.com**

Race proceeds benefitting the following organizations:

Phoenix Hope International

Redlands Educational Partnership

Inland Harvest Food Bank

# Race Day Schedule

| | |
|---|---|
| Morning Check-In: | 7 a.m. |
| Kids 1K Start: | 7:45 a.m. |
| 5K Race Start: | 8 a.m. |
| Last Finisher: | 9:30 a.m. |
| Awards: | 9:30 a.m. |
| Clean-up: | 10-11 a.m. |

# 5K Course

The 5k and 1k course is different than prior years:

1. Start at corner of University St and Brockton Ave
2. Participants will run south on University St.
3. West on Colton Ave.
4. South on Division St.
5. East on Park Ave
6. North on University St.
7. East on Sylvan Blvd
8. North on Grove St.
9. East on Colton Ave
10. North on West Drive
11. East on Chapel Dr.
12. South on East Drive
13. East on Colton Ave
14. North on Grove St
15. West on Brockton Ave. to the Finish

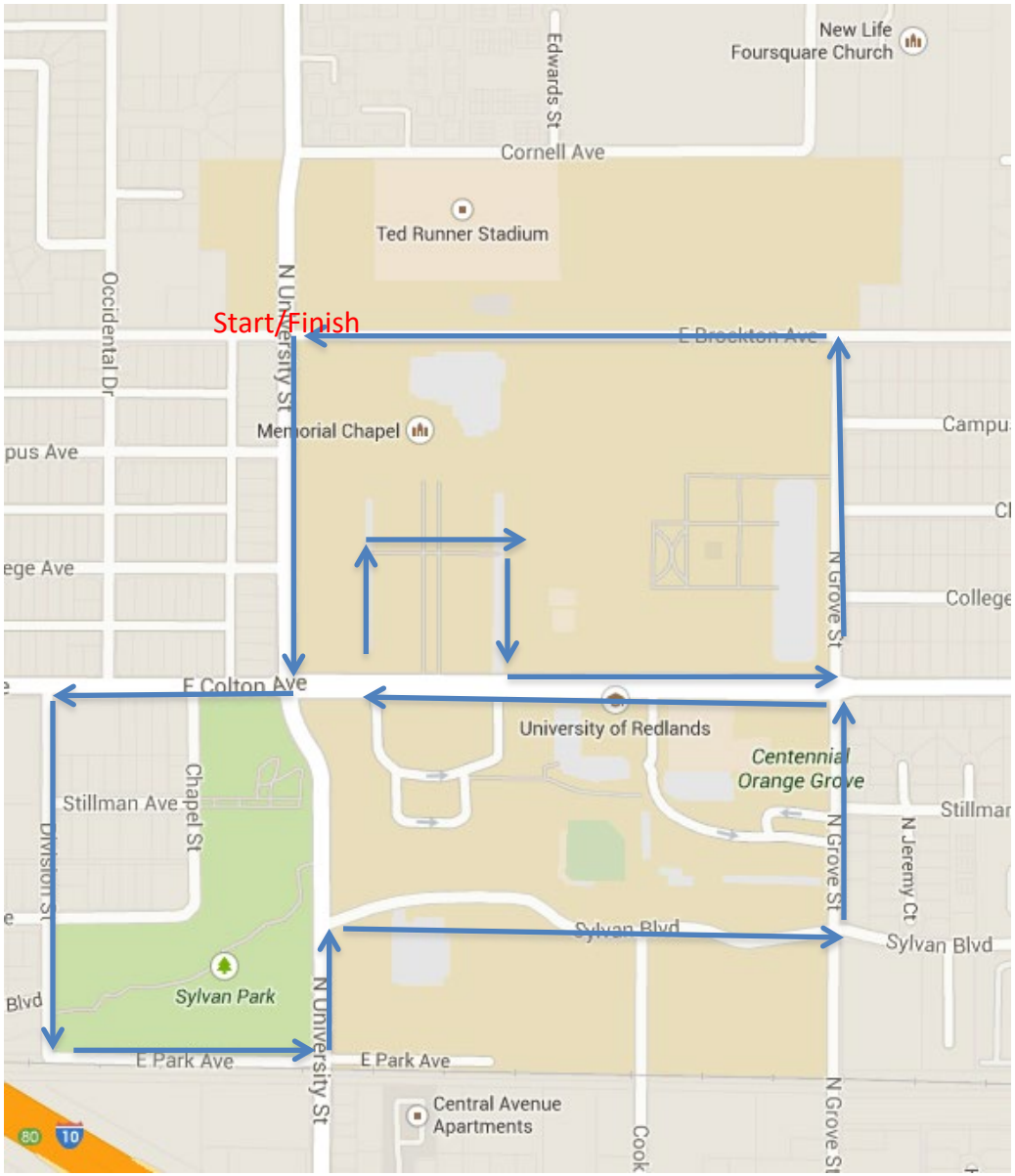

# Kids' 1K Course

The kids (12 and under) 1K fun run course will be as follows:

1. Start the corner of University St and E Brockton Ave
2. Participants will run south on University St.
3. East on Chapel Drive
4. Continue east on East Dr.
5. Through the parking lot to E Brockton Ave.
6. West on Brockton Ave to the Finish

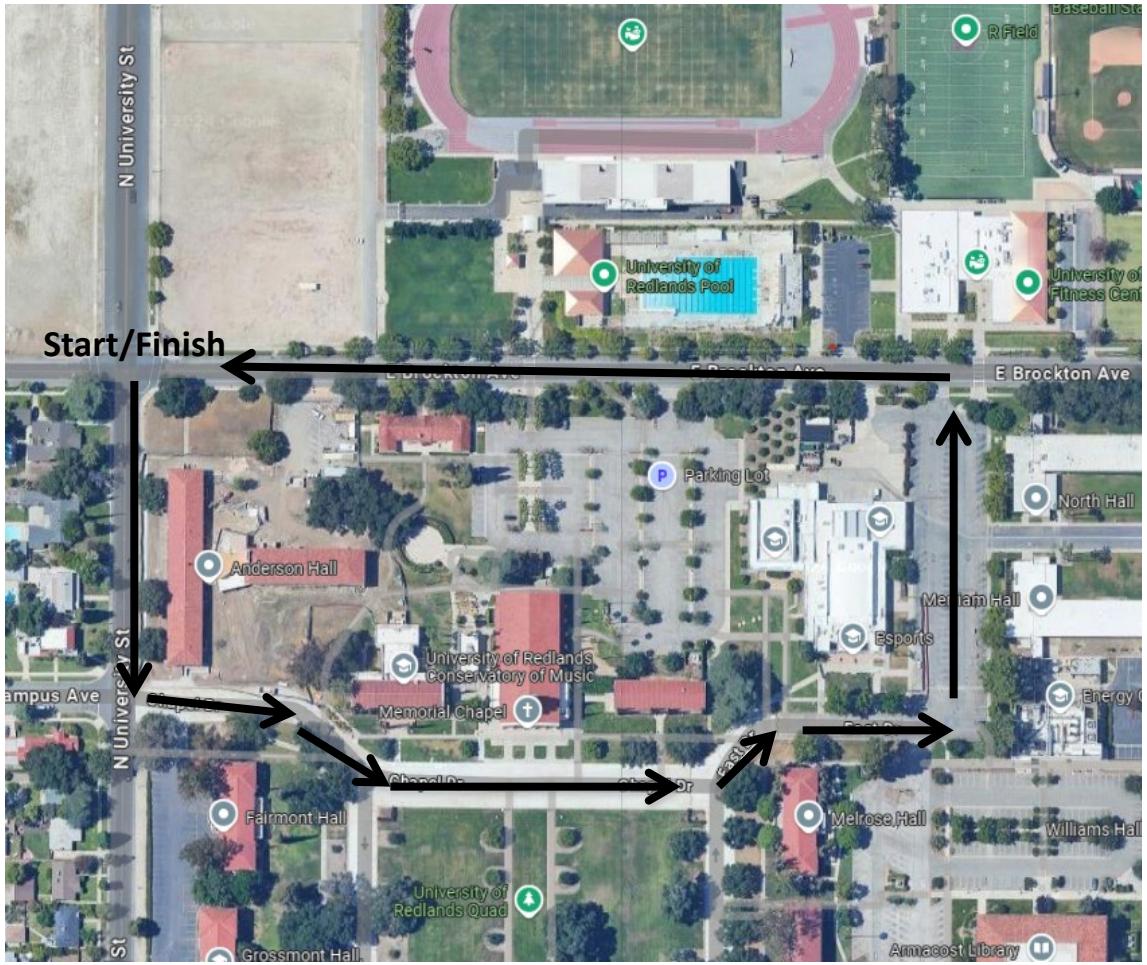

# Street Closures

The following street closures are proposed for the event.

1. Colton Ave between Division Street and Grove St.
2. Division St. between E Colton St. and Park Ave.
3. E Park Ave. between Division Street and University Street.
4. N University Street between E Park Ave and Cornell Ave.
5. Sylvan Blvd between N University St and N Grove St.
6. N Grove St between Sylvan Blvd and E Brockton Ave
7. E Brockton Ave between N Grove St and N University St.

Street closures will likely last two hours from 7:30 (15 minutes before the 1K race begins) to 9:30 a.m. (estimated time when last runner will finish the 5K).

Roads will remain open and accessible to emergency vehicles as well as any residents that live on a street that is closed.

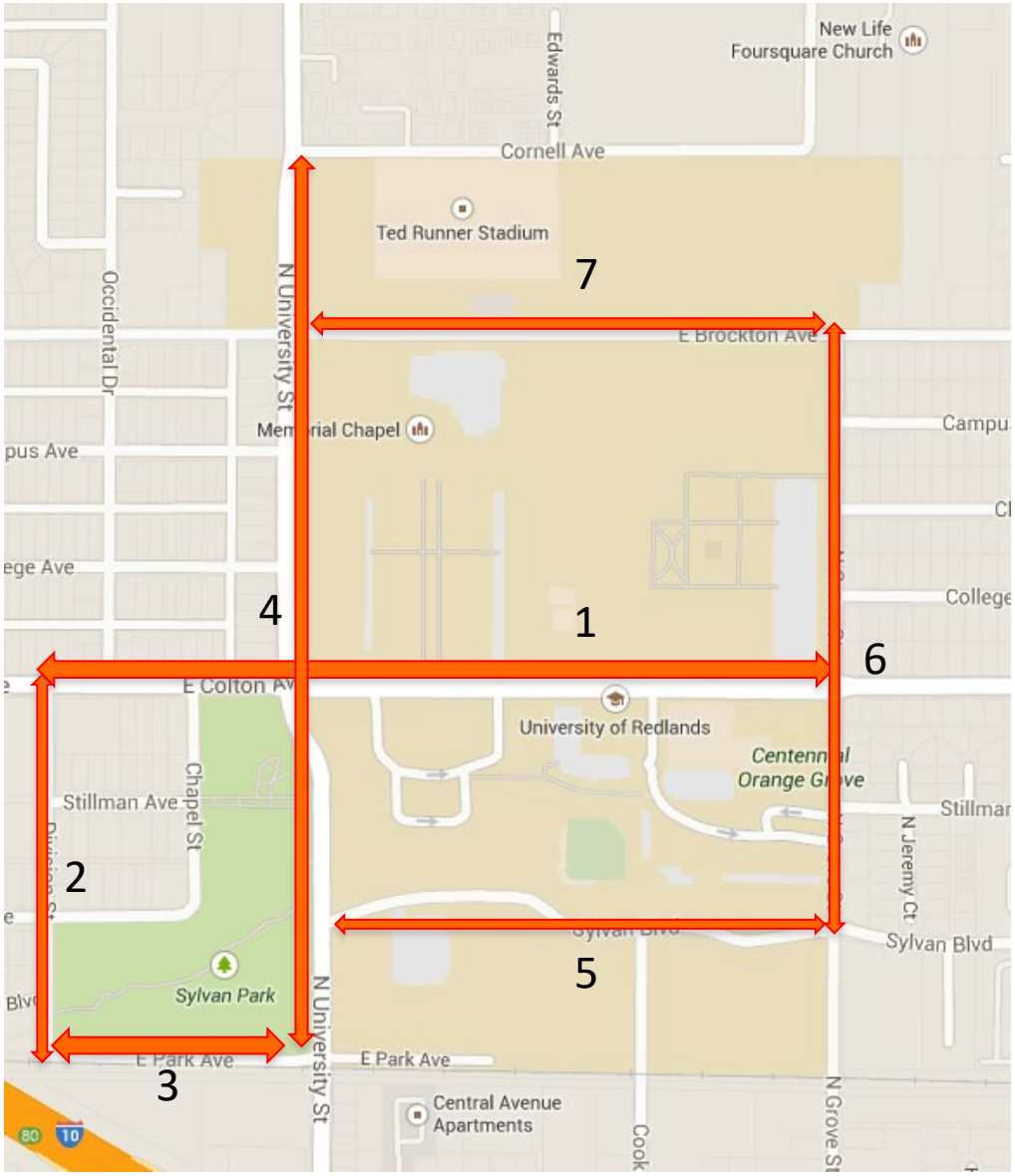

# Traffic Monitor Locations

Traffic Monitor Intersections:

1. Cornell Ave and University St
2. University St and Brockton Ave
3. University St and Campus Ave
4. University St. and College Ave
5. Colton Ave and Occidental Dr
6. Colton Ave and Division St
7. Division St and Park Ave
8. University St and Park Ave
9. Sylvan Ave Blvd and Cook St
10. Grove St. and E. Sylvan Blvd
11. Grove St and Colton Ave
12. Grove St and College Ave
13. Grove St and Clock St
14. Grove St and Campus Ave
15. Grove St and Brockton Ave

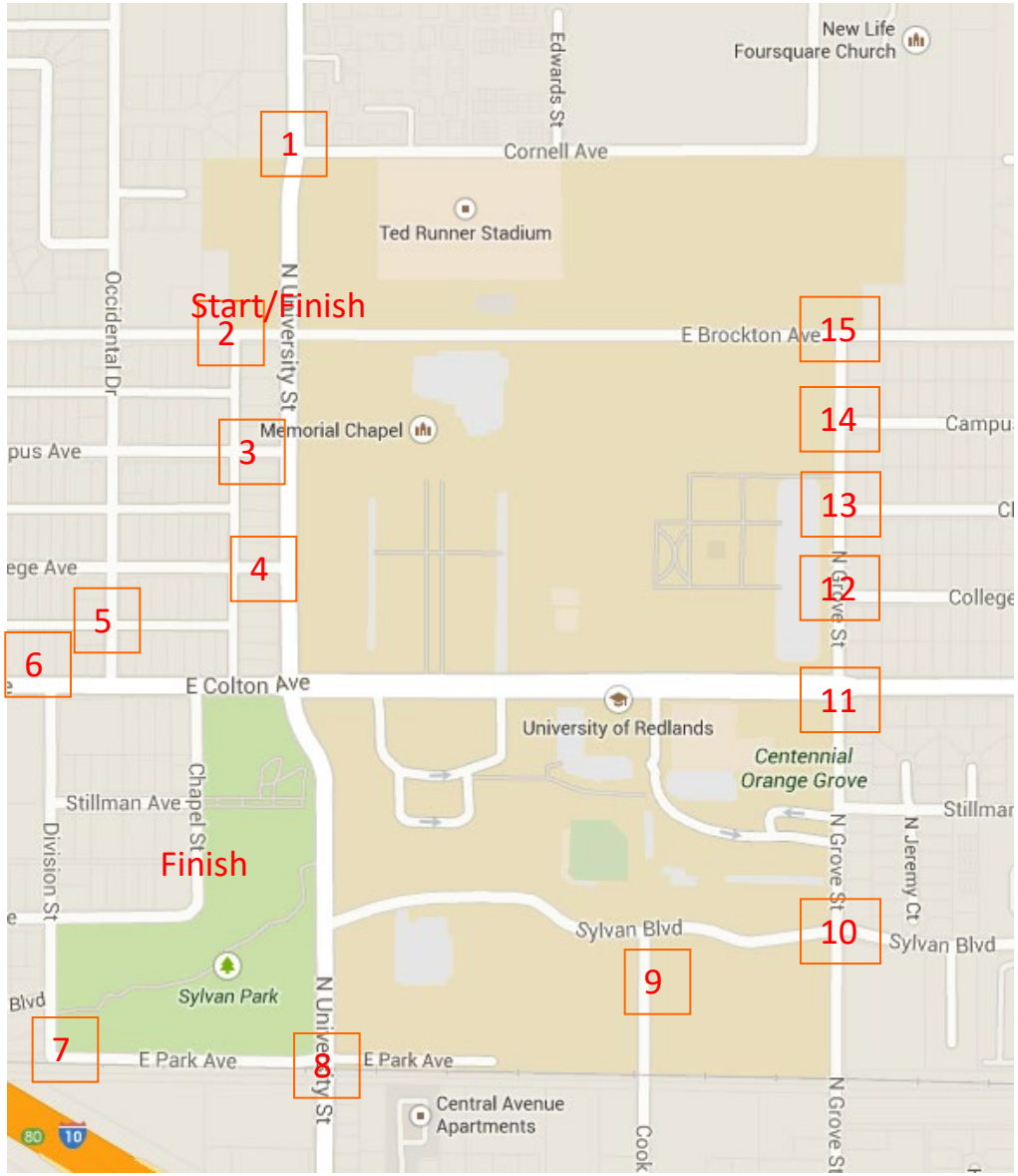

# Traffic Monitors Continued

All monitors will be provided by Phoenix Hope International/Race Organizer.

All monitors will be over 18 years old, will wear safety reflector vests, and will all be trained in traffic safety for the event.

Monitors will have radios and direct communication with the race info/headquarters located in Sylvan park. Any incidents will be immediately reported to race info so that appropriate personnel are notified and can be dispatched to area if needed.

Monitors will be familiar with the course as well as surrounding area in order to instruct motorists of available detours around the event.

# Start/Finish Line

The race start is on University St. near the Brockton Ave.

The finish line will be on Brockton Ave near University St.

An inflatable arch is placed at the start and finish line

There are various 10x10 canopies ("EZ Ups") placed in the near the start/finish line area. One EZ up is near the finish line and used by the timing company. Other EZ ups to be placed in TRS parking lot or Serrano Lawn for race day check-in, t-shirt distribution and volunteer check in. Small staging area also set up for handing out post-race awards.

Port-a-potties are purchased for the event and are placed near the start/finish area in TRS parking lot.

# Safety

First Aid

- One EMT located at start/finish line.
- Nurse or other medical personnel on-site at first aid booth to treat light injuries (muscle, strains, sprains, cramps, etc.)
- Area Urgent Care / ER notified of event
- Any other provisions/recommendations from the City

# Post race Overview

- Potential post race expo involving local vendors/sponsors
- Hand out participant t-shirts
- Awards (Thanksgiving pies) to all male/female overall winners and age group winners
- Appropriate health permits (as needed) for post-race food (bananas and orange slices)
- Port-a-potties + hand wash stations at start/finish line
- Clean-up area and dispose of trash
- Return all barricades to City Yard
- Last three years all roads were reopened by 9:15 a.m. and entire event was cleaned up and all participants and race organizers were gone by 11 a.m.

INTERNAL REVENUE SERVICE
P. O. BOX 2508
CINCINNATI, OH 45201

DEPARTMENT OF THE TREASURY

Date: SEP 18 2013

Employer Identification Number:

DLN:

PHOENIX HOPE INTERNATIONAL
C/O PARKER FILLMORE
1460 N GAYLORD CIR
MESA, AZ 85213

Contact Person:
DIANE M GENTRY ID#
Contact Telephone Number:
(877) 829-5500
Accounting Period Ending:
December 31
Public Charity Status:
170(b)(1)(A)(vi)
Form 990 Required:
Yes
Effective Date of Exemption:
June 10, 2010
Contribution Deductibility:
Yes
Addendum Applies:
No

Dear Applicant:

We are pleased to inform you that upon review of your application for tax exempt status we have determined that you are exempt from Federal income tax under section 501(c)(3) of the Internal Revenue Code. Contributions to you are deductible under section 170 of the Code. You are also qualified to receive tax deductible bequests, devises, transfers or gifts under section 2055, 2106 or 2522 of the Code. Because this letter could help resolve any questions regarding your exempt status, you should keep it in your permanent records.

Organizations exempt under section 501(c)(3) of the Code are further classified as either public charities or private foundations. We determined that you are a public charity under the Code section(s) listed in the heading of this letter.

Please see enclosed Publication 4221-PC, Compliance Guide for 501(c)(3) Public Charities, for some helpful information about your responsibilities as an exempt organization.

Sincerely,

Director, Exempt Organizations

Enclosure: Publication 4221-PC

Letter 947 (DO/CG)

Event: Redlands Turkey Trot Date: 6/16/25

# PERMIT TO CLOSE STREET FOR SOCIAL EVENT(S)

**Permission to close a street for an event is subject to the following requirements:**

| | |
|---|---|
| 1. | **Street Closure Diagram MUST be attached. (Failure to submit diagram will result in non-issuance of permit).** |
| 2. | **Event Flyer or Event Description MUST be attached. (Failure to submit flyer or event description will result in non-issuance of permit).** |
| 3. | **Applicant MUST provide insurance coverage per City's requirements (see reverse)** |
| 4. | Written permission from all residents of the effected portion of the street MUST be attached. |
| 5. | No tables or other objects shall be placed on the street surface. |
| 6. | No alcohol shall be consumed on the street or City right-of-way outside of a permitted area. |
| 7. | Temporary No Parking Signs and barricades shall be supplied and posted by City Staff |
| 8. | Affected street(s) shall remain accessible for emergency vehicles and local traffic at all times. |
| 9. | This permit pertains only to the closing of the street(s). This permit does not relate to the type of activity, noise, or any other aspect of the event. All other applicable and appropriate ordinances and laws apply. |

Permission is hereby granted to: Kent Sommer/Phoenix Hope International

To close (street names) See Traffic Plan

Between (street names) _____

Day & date 11/27/25 **Event times -** from (time) 7 ☑ am ☐ pm to (time) 10 ☑ am ☐ pm

Address of Applicant: 625 Ranch Lane, Glendora, CA 91741 Phone No: 714-614-7321

Signature of Applicant: Kent Sommer Applicant Name (print): Kent Sommer

Condition(s);**set up & clean up time required:** Set up: 5 am; clean up 10-11 am

Event Description: 5K run in Redlands on Thanksgiving morning

**FOR OFFICE USE ONLY**

**This permit must be signed by the Chief of Police in order to be valid.**

1. _____ Chief of Police — Date 7/1/25
2. _____ Municipal Utilities & Engineering Department — Date 7 2 25
3. _____ Facilities & Community Services Department — Date 6/23/25
4. _____ Risk Management Division — Date 7/3/25

Street Closure time: From 5 ☒ am ☐ pm To 11 ☒ am ☐ pm

**Staff Notes:**

In anticipation of the City Council's consideration of this request, staff has compiled the following table outlining costs related to fees established by Resolution of the City Council and departmental charges pertaining to personnel and equipment resources necessary for the support of the event. The departmental charges are costs outside of normal City operations that would not be incurred by the City if the special event was not taking place.

| **Departmental Charges (Personnel & Equipment)** | **2025-2026 Amount** | **Type** | **2024-2025 Amount** |
|---|---|---|---|
| Police Personnel[1] | $13,551.00 | Hard Cost | $12,300.00 |
| Fire Personnel[1] | $0.00 | Hard Cost | $0.00 |
| Facilities & Community Services Personnel[1] | $2,700.00 | Hard Cost | $2,025.00 |
| Personnel & Equipment Subtotal | **$16,251.00** | | $14,325.00 |
| **Fees Established by City Council Resolution** | | | |
| Park Reservation | $146.00 | Soft Cost | $211.00 |
| FCS Equipment | $0.00 | Soft Cost | $0.00 |
| Fire Equipment | $0.00 | Soft Cost | $0.00 |
| **Fees Subtotal** | **$146.00** | | **$211.00** |
| **Total Departmental Charges and Fees** | **$16,397.00** | | $14,536.00 |
| | **$16,251.00**<br>**$146.00**<br>**$16,397.00** | Hard Cost<br>Soft Cost<br>Total | **$14,325.00**<br>**$211.00**<br>**$14,536.00** |

[1]*Personnel costs are calculated conservatively assuming the highest staff cost scenario. Actual costs may vary on the day of the event based on the actual staff present. Actual costs will be confirmed following the event and will be included in a reconciliation report presented to the City Council.*

The following table summarizes the total estimated costs associated with the use of City resources and waiver of fees approved for events scheduled during Fiscal Year 2025-26 to date:

TABLE 2: FY 2025-26 Fee Waivers to date

| **Hard Costs** | **Soft Costs** | **Deposits Refunded** | **Waiver Amount** | **Net Amount** |
|---|---|---|---|---|
| $129,438.12 | $9,928.63 | $0.00 | $139,366.75 | $139,366.75 |

**City Council/Financing Authority Meeting** **J. 1.**

**DATE:** 09/16/2025

**TO:** Honorable Mayor and City Council Members

**SUBJECT:** Report and recommendation by the Ad Hoc Committee of the City Council regarding the selection of a Lead Labor Negotiator to represent the City during the upcoming contract negotiations with the City's bargaining units and possible direction to staff (Mayor Pro Tem Shaw and Council Member Davis)

---

**MOTION:**

If the City Council concurs with the Ad Hoc Committee's recommendation, the following motion is provided.

I move to direct staff to retain John Bakhit of Atkinson, Andelson, Loya, Ruud & Romo to serve as the City's lead labor negotiator for the City's upcoming contract negotiations with its bargaining units.

**RECOMMENDATION:**

It is recommended by the City Council Ad Hoc Committee to retain John Bakhit of Atkinson, Andelson, Loya, Ruud & Romo to serve as the City's lead labor negotiator for the City's upcoming contract negotiations with its bargaining units.

**DISCUSSION:**

The current Memoranda of Understanding between the City and its nine bargaining units will expire on June 30, 2026. As the City prepares for the upcoming negotiations, an important step in the process is to select a lead labor negotiator to represent the City during the collective bargaining process with the various units.

At the regular meeting of July 15, 2025, the City Council authorized the formation of an Ad Hoc Committee of the City Council and appointed Mayor Pro Tem Shaw and Council Member Davis to the committee. The purpose of the committee was to interview experienced labor negotiators and make a

recommendation for a lead labor negotiator to the full Council at a regular meeting in September. The committee has conducted its interviews and has made its selection to recommend John Bakhit of Atkinson, Andelson, Loya, Ruud & Romo to the full Council. A copy of Mr. Bakhit's bio is attached for the Council's reference.

**SUBMITTED BY:**

Marc Shaw, Mayor Pro Tempore
Denise Davis, Council Member

---

**Attachments**

John Bakhit Bio

---

aalrr Atkinson, Andelson Loya, Ruud & Romo
A Professional Law Corporation

# John H. Bakhit

Partner
951-990-2877
John.Bakhit@aalrr.com

John H. Bakhit is a Partner in our Riverside and Cerritos offices where he provides advice and counsel to public entities and represents them in collective bargaining, disciplinary matters, auditing/updating policies and procedures, conducting internal investigations, training, and other labor and employment matters.

Prior to entering law school, Mr. Bakhit served as an Oakland Police Officer working in Patrol and the Crime Prevention Unit where he investigated crimes and regularly wrote and served search warrants, worked undercover, and testified as an expert witness in court.

Mr. Bakhit has devoted his legal career to labor and employment law where he has represented public sector bargaining units and their members in matters arising out of the Public Safety Officers Procedural Bill of Rights (POBR), the Firefighters Procedural Bill of Rights (FBOR), the California Labor Code, the Meyers-Milias-Brown Act (MMBA), and the Higher Education Employer/Employee Relations Act (HEERA). Prior to representing public entities, Mr. Bakhit represented hundreds of individual peace officers, firefighters, and attorneys in administrative cases, critical incidents, and criminal cases. Mr. Bakhit also served as general counsel and chief negotiator for public sector bargaining units, where he regularly represented clients in contract negotiations with city, county, and state entities, meet & confers, and unfair labor practice charges in front of the Public Employment Relations Board (PERB).

Mr. Bakhit's more than 15 years of experience from the labor side is a unique asset that allows him to effectively and efficiently deal with issues at the earliest stages, as he is able to anticipate and address the various concerns and angles that will likely be brought up by employee

## OFFICES

12800 Center Court Drive
Suite 300
Cerritos, CA 90703

3880 Lemon Street
Suite 350
Riverside, CA 92501

## INDUSTRIES

Public Educational Agencies & Institutions

Public Entities

## EDUCATION

J.D., Santa Clara University School of Law
B.A., Columbia College, *magna cum laude*

## ADMISSIONS

2006, California

## PRACTICE AREAS

Advice & Counsel

Collective Bargaining

COVID-19

Disciplinary Matters

Labor & Employment Law

Public Safety

# John H. Bakhit

organizations.

Mr. Bakhit is also a POST-Certified instructor who is often called upon by organizations to give lectures and provide training on POBR, FBOR, disciplinary investigations, critical incident investigations, labor relations, unfair labor practices, and other labor and employment related matters.

During law school, Mr. Bakhit was awarded the Law Faculty Scholarship and the Certificate for Excellence in Oral Advocacy. He also completed an internship with the Santa Clara County District Attorney's Office where he was assigned to the Gang Unit.

## Honors & Recognitions

Mr. Bakhit was recognized by Martindale Hubbell® with the highest Peer Review Rating of "AV Preeminent."

Mr. Bakhit was also recognized by Martindale Hubbell® with the highest client review rating of "Platinum Client Champion."

## Firm News

AALRR Announces 2024 Equity and Non-Equity Partners
01.23.2024

Atkinson, Andelson, Loya, Ruud & Romo Welcomes John Bakhit as Of Counsel
02.24.2022

## Events & Speaking Engagements

Introduction to Public Safety Officers Procedural Bill of Rights Act
Monterey, California, 11.19.2025

## Alerts & Articles

Ramp Up of Employers-Focused Immigration Crackdowns Underway—What Employers Can Do to Prepare
06.20.2025

Public Safety Officers Procedural Bill of Rights Act

Workplace Training

### LANGUAGES

Arabic, Spanish

# John H. Bakhit

BWC Footage and CPRA Update (Third Circuit Court of Appeal Decision)
06.12.2025

Schneider Case Regarding Brady Requirements vs. Pitchess
06.12.2025

Ninth Circuit Upholds Jury Verdict Regarding Negligence in Police Restraint Death Case Even When No Excessive Force Was Used
05.02.2025

California Appellate Court Rules that County was Required to Meet and Confer with Recognized Bargaining Unit Over the Implementation of New Legislative Changes Under Limited Circumstances
11.27.2024

PERB Provides Clarity on Risk for Repeated Labor Violations in Context of Interest Arbitration Bargaining Dispute
05.05.2023

Title 5 Amendments for Campus Climate and Public Safety Requirements – Is Your Campus Ready?
10.12.2022

PERB Reinforces Deferral to Arbitration Doctrine in Context of Retaliation Unfair Practice Claims Brought Under MMBA
10.10.2022

California Appellate Court Rules That School District Entitled to Retain Unused Hardship Funding Provided by the State of California
05.27.2022

California Appellate Court Rules that State Labor Law Preempts a Voter-Approved Measure Setting City Firefighter Salaries
03.30.2022

A California Appellate Court Rules that Digital In-Car Video System Recording Was Properly Allowed as Evidence at Police Officers' Termination Hearings
01.12.2022

## Blog Posts

California Court of Appeal Clarifies Law Enforcement Agency Liability for Safeguarding Peace Officer Personnel Information (AKA "*Pitchess*") and Duties to Investigate Citizen Complaints
*Public Safety Law Blog*, 05.02.2025

# John H. Bakhit

Public Employment Relations Board Finds Pitchess Process Applies to Information Request for Peace Officer Personnel Records Arising Outside Labor or Arbitration Dispute
*Public Safety Law Blog*, 02.05.2025

AALRR Attorney Presenting 2-day POST-Certified OIS Investigations Course at La Mesa PD
*Public Safety Law Blog*, 10.10.2024

AALRR Attorney Presenting 2-day POST-Certified OIS Investigations Course at Long Beach PD
*Public Safety Law Blog*, 06.05.2024

AALRR Attorney Presenting 2-day POST-Certified OIS Investigations Course at Davis PD
*Public Safety Law Blog*, 03.15.2024

Legal Update Impacting Confidentiality of Peace Officers' Personnel Files – Senate Bill 400
*Public Safety Law Blog*, 03.15.2024

Cannabis Use - California's Commission on Peace Officer Standards and Training ("POST") Issues Bulletin on Legislative Changes Affecting Selection Standards
*Public Safety Law Blog*, 12.18.2023

AALRR Attorney Presenting 2-day POST-Certified OIS Investigations Course at Rialto PD
*Public Safety Law Blog*, 10.18.2023

AALRR Attorney Presenting 2-day POST-Certified OIS Investigations Course at Riverside PD
*Public Safety Law Blog*, 08.09.2023

Court of Appeal Further Clarifies POBR 1-Year Statute of Limitations
*Public Safety Law Blog*, 03.30.2023

California Court of Appeal Rules on Statute of Limitations Under POBRA
*Public Safety Law Blog*, 02.10.2023

AALRR Attorney Presenting Two-Day POST-Certified OIS Investigations Course
*Public Safety Law Blog*, 02.06.2023

## Community & Professional

Mr. Bakhit sits on boards of numerous non-profit organizations and foundations and is currently involved with the following organizations:

Sophia's Mission (www.sophiajmission.org), Board of Directors

Cops Direct (www.copsdirect.org), Board of Directors

# John H. Bakhit

IMVR (website coming soon), Board of Directors

**City Council/Financing Authority Meeting** **J. 2.**

**DATE:** 09/16/2025

**TO:** Honorable Mayor and City Council Members

**SUBJECT:** Discussion and possible action relating to potential revenue ballot measures for the November 2026 Election (Council Member Tejeda)

---

**MOTION:**

I move to direct staff accordingly.

**DISCUSSION:**

Council Member Tejeda expressed interest in new revenue sources to support City services, and in particular, to summarize three options to tax distribution centers and warehouses. Two of these options would increase an existing tax, and the third would impose a new tax to support police and fire services. At this preliminary stage, staff is providing requested general information about each option, so the discussion below is limited to basic requirements. Staff will be happy to provide more detailed information following further direction from the Council regarding which alternative it wishes to pursue, if it chooses to pursue any of them.

A. General Information re Taxes

First, all taxes in California are either “general” or “special.” (Cal. Const., art. XIIIC, § 2.) Revenue from general taxes are placed in the General Fund and may be spent on anything the Council approves, while revenue from special taxes are earmarked for particular purposes. General taxes require simple majority approval, while special taxes must be approved by two-thirds of the voters. Further, the election on a general tax must be consolidated with a regularly scheduled general election for members of the City Council, while the City may call a special election on a special tax.

Second, taxes are distinct from other revenue measures in that the City does not need to draw a direct connection or nexus between the amount of revenue they raise and the costs they cover. California law balances this with the voter-approval requirements noted above, but the important point here is that the City need not prepare a formal nexus study or other cost-of-service analysis (either through its own staff or with assistance from a consultant) as it must for assessments and most fees. Instead, the Council may rely on routine budget and other planning processes to calculate the tax rate it asks voters to approve.

Third, the tax presented to voters does not need to have a fixed rate, but may include automatic increases on a regular schedule (e.g., annually) tied to a clearly defined formula (e.g., a fixed percent or one tethered to the Consumer Price Index). The important issue is informed consent from the voters, so the election materials presented to them must simply explain (1) that the measure before them includes future increases, and (2) how those increases will be limited.

B. Summary of Potential Revenue Measures.

The summary below reviews potential revenue measures that could be placed before voters at the November 2026 election and summarizes the associated administrative, technical, and financial considerations for each option. Please note whether each alternative is a general or special tax to inform the Council (1) how many voters must approve it, and (2) when voters may be asked to approve it.

**(1) Business License Tax Adjustment for Fulfillment Centers.**

In 2022, voters approved an amendment to the business license tax applicable to fulfillment centers, increasing the rate from approximately $0.047 per square foot to $0.105 per square foot (codified in Chapters 5.04 and 5.08 of the Redlands Municipal Code). The enabling ordinance also eliminated the prior provision allowing for annual adjustments based on the Consumer Price Index (CPI). At the time, annual revenues under the previous rate were estimated at $431,000, with the approved increase projected to generate an additional $530,000 annually for the General Fund ($961,000 in total).

The Council may ask voters to increase this business tax on distribution centers by raising the rate to a new fixed amount (e.g., 11 cents per square foot), by adding an escalation factor for future years (e.g., an annual increase tied to the C.P.I.), or by doing both.

Based on historical CPI performance, staff estimate this adjustment could result in additional revenue growth of approximately 2 to 5 percent per year, depending on future inflation trends. Actual revenues collected in FY 2025 from fulfillment centers were roughly $1.04 million. Using this actual revenue figure, a 3% increase (representing an average annual CPI) would yield an additional

$31,200 in a given year.

This is a general tax, as its revenue is not tied to any particular use, so it must be approved by a simple majority of voters (50% plus one) at a general municipal election by the electorate that includes the election of seats on the City Council.

**(2) Revision of the Existing Paramedics Parcel Assessment.**

In 1985, the City's voters renewed a special parcel tax (originally approved in 1982) to support its paramedic service. (Ord. No. 1900, § 4.) This Paramedic Tax varies based on the type and size of a parcel, and the maximum rate for commercial and industrial parcels increases by floor area as follows.

- 0 to 4,999 square feet = $40
- 5,000 to 9,999 square feet = $80
- 10,000 to 19,999 square feet = $120
- 20,000 to 39,999 square feet = $160
- Greater than 39,999 square feet = $160 plus $40 for each 20,000 square-foot increment, or portion thereof, in addition to 39,999.

The current rates are all below these caps. (See Reso. No. 8682.)

Over time, the costs to support paramedic service have grown to exceed this tax's revenue, so the City has diverted general revenues from other sources to supplement it. First, therefore, the Council may ask voters to increase the Paramedic Tax to a rate that covers more or all of the City's paramedic services. This would free up the general revenues currently diverted to paramedic service for other uses.

The Council may consider a proposal to revise the current Paramedic Tax structure by increasing the assessment rate applicable to commercial and industrial parcels.

Second, either instead of or in addition to increasing the Paramedic Tax, the Council may ask voters to expand its uses beyond paramedic services, for example to support fire or police service. In effect, this would ask voters to transform the Paramedic Tax to a broader Public Safety tax. While this would expand its uses, it would keep the measure a special tax by continuing to limit those uses to a closed list of what the voters approve.

Third, the Council does not need to increase the rate for every parcel category, nor is it limited to the categories currently listed in the Paramedic Tax ordinance. For example, the Council could ask voters to increase the rate for all commercial parcels, or only to increase the rate for commercial parcels larger than 39,999 square feet, or to impose a new rate just for commercial / industrial parcels dedicated to distribution centers or warehouses. The important points, again, are

informed consent from the voters and a rational policy basis for any distinctions the tax makes in its rates.

Before placing such a measure on the ballot, several key steps would be required:

- Fiscal and Service Level Analysis – A comprehensive cost-of-service study would be necessary to determine the appropriate assessment level needed to sustain paramedic services. Based on surveys of peer jurisdictions, the estimated cost for such a study ranges from $60,000 to $115,000.

- Voter Survey and Outreach – A professionally conducted voter opinion survey and development of a strategic outreach plan are strongly recommended prior to advancing a measure. Estimated costs for these services start at $55,000.

- Revenue Potential – Additional revenue projections cannot be finalized until the cost-of-service analysis has been completed.

Historically, parcel tax measures have had mixed success statewide. Of the 53 parcel tax measures placed on the ballot by cities during the last three November elections (2020, 2022, and 2024), 26 were approved, reflecting a passage rate of 49 percent.

Because this option would increase and/or expand a special tax that applies city-wide, it must be approved by two-thirds (2/3) of the City's voters either at a general municipal or special election and the revenue would be legally restricted for a dedicated purpose, separate from the General Fund

**(3) New Parcel Tax for Distribution/Fulfillment Center Properties.**

The final option the Council may consider is a new parcel tax on distribution/fulfillment centers and warehouses to support police and fire services, including salaries. This is permissible, just as the Paramedic Tax is permissible, and it would be imposed similarly to how that tax is imposed. Indeed, functionally, this option would bring in the same amount of revenue from the same sources as one of the Paramedic Tax amendments discussed above: Voter approval to impose a new rate for commercial / industrial parcels dedicated to distribution/fulfillment centers or warehouses, and to expand it into a new Public Safety special tax that may also support police and fire.

Fire protection services have been identified as one potential use of the revenues generated by this tax; however, the final determination of any dedicated purpose would be subject to City Council discussion and direction.

As with the proposed revision to the Paramedics Parcel Assessment, significant preparatory work would be necessary before advancing such a measure to the ballot:

- Fiscal and Service Level Analysis – A comprehensive study would be required to determine the appropriate tax amount relative to the cost of providing the designated services. Based on peer jurisdiction surveys, estimated costs for this analysis range from $60,000 to $115,000.

- Voter Survey and Outreach – A professionally conducted voter opinion survey and outreach strategy are recommended to assess public support and develop effective communications. The estimated cost for these services start at $55,000.

- Revenue Potential – Revenue projections cannot be established until the specific dedicated service costs are identified.

Passage Rates – Historical experience suggests mixed outcomes for parcel tax measures. As noted above, of the 53 measures placed on the ballot by cities during the last three November elections (2020, 2022, and 2024), 26 were approved, reflecting a passage rate of approximately 49 percent.

Whether such a tax is passed as a new levy or as an amendment to the Paramedic Tax, a parcel tax may be imposed on vacant parcels. However, this would confirm the tax as a “property tax” under California law, so (1) it must be limited to specified uses, and (2) it may not be imposed ad valorem (i.e., based on a parcel’s value). The first requirement is met by limiting tax revenue to police and fire, and the second simply requires a metric other than property value — like the Paramedic Tax’s use of square feet for commercial and industrial parcels. In short, these requirements are not difficult to meet, but staff note them as legal requirements for this option.

As a special tax under state law, this measure would require approval by two-thirds (2/3) of the voters at either a general municipal or special election, and would be legally restricted for a dedicated purpose, separate from the General Fund.

### C. Next Steps & Conclusion

Council is being asked at this time to consider these proposals at a conceptual level. Each potential measure carries different voter approval thresholds, revenue implications, and administrative requirements.

Each option also will involve general fund expenditures to prepare the measure for the ballot, including the retention of polling and financial consultants. While the Business License Tax adjustment represents a relatively straightforward modification to an existing revenue source, both parcel tax options would require significant preparatory work and staff time before meaningful revenue estimates could be developed.

This report is intended to provide a general overview of potential revenue options available to the City. Depending upon the City Council's preference, staff can take a range of further actions, including returning at a future date with a more specific recommendations for a tax measure.

If the Council wishes to place a measure on the November 2026 ballot, a ballot resolution must be filed with the County Registrar of Voters no later than August 11, 2026. While cost estimates from the Registrar's Office have been requested, they are not typically available for several weeks. In general, the costs to conduct an election are proportionately shared by the participating jurisdictions based upon the number of contests on the ballot and the number of registered voters for each contest. For reference, the City's actual cost for placing a ballot measure on the November 2022 Statewide Direct General Election ballot was $36,802.

At this time, staff seek direction from the City Council regarding whether to pursue further work on any of the following proposals:

- Business License Tax Adjustment for Fulfillment Centers – This option would reinstate annual CPI-based adjustments to the existing $0.105 per square foot rate. No additional studies would be required prior to placing this measure on the ballot.

- Revision to the Existing Paramedics Parcel Assessment – If Council wishes to advance this proposal, staff would need to engage a consulting firm to conduct a comprehensive service level costing and fiscal analysis (estimated at $60,000 to $115,000) and a professional public opinion voter survey and outreach strategy (starting at $55,000).

- New Parcel Tax for Warehouse and Distribution/Fulfillment Center Properties – Advancing this measure would also require a service level costing and fiscal analysis (estimated at $60,000 to $115,000) and a professional public opinion voter survey and outreach strategy (estimated at $55,000).

If desired, staff will return at a future meeting with a detailed work plan, timeline, and funding options to support any measures the Council chooses to pursue.

**ALTERNATIVE:**

Council may choose to reject, modify or table this item.

**STRATEGIC PLAN:**

Priority D: Fiscal Sustainability

**SUBMITTED BY:**

Eddie Tejeda, Council Member

**REVIEWED BY:**

Charles M. Duggan Jr., City Manager
Yvette M. Abich Garcia, City Attorney
Janice McConnell, Assistant City Manager
Christopher Boatman, Assistant City Manager
Danielle Garcia, Management Services/Finance Director

**City Council/Financing Authority Meeting** **K. 1.**

**DATE:** 09/16/2025

**TO:** Honorable Mayor and City Council Members

**SUBJECT:** Consideration of a Homeless Resource Services Agreement with Many Mansions for property management services for the Project Home Key located at 1675 Industrial Ave. Redlands, CA. 92373 for an amount not-to-exceed $300,000 for a period of one year with two additional one-year renewal options for a total compensation not-to-exceed $900,000 and determine that the services provided are exempt from environmental review pursuant to Section 15061 (b)(3) of the State's guidelines implementing the California Environmental Quality Act (Assistant City Manager Boatman)

---

**MOTION(S):**

If the City Council determines that staff's recommendation is appropriate, the following motion(s) is/are provided:

1. I move that the City Council determine approval of the homeless resource services agreement with Many Mansions for property management services for the Project Homekey and is exempt from environmental review pursuant to Section 15061(b)(3) of the State's guidelines implementing the California Environmental Quality Act; and

2. I move that the City Council approve an agreement with Many Mansions in an amount not-to-exceed $300,000 for a period of one year with two additional one-year renewal options for a total compensation not-to-exceed $900,000.

**RECOMMENDATION:**

Staff recommends that the City Council award a homeless resource services agreement to Many Mansions for an amount not-to-exceed $300,000 for a period of one year with two additional one-year renewal options for a total compensation not-to-exceed $900,000. Staff further recommends City Council determine approval of the homeless resource services agreement is exempt from environmental review pursuant to Section 15061(b)(3) of the State's

guidelines implementing the California Environmental Quality Act.

**DISCUSSION:**

In 2022, the City of Redlands (City) became partners in a "Project Home Key" grant-funded endeavor to convert the former Good Nite Inn into 98 studio apartments and maintain the facility as a permanent supportive housing complex for the formerly unhoused population. In order to ensure the long term success of the project, the City committed to providing annual financial support for the project for the first 7 years, totaling approximately $3.5 million dollars.

Attached is a proposed Homeless Resource Services Agreement engaging Many Mansions as a Property Management Agent (PM Agent) to oversee the operations of the "Project Homekey" permanent supportive housing facility, located at 1675 Industrial Park Ave., Redlands, CA. Under the proposed agreement, the PM Agent would be responsible for managing all aspects of the property, including leasing, rent collection, and maintenance, while ensuring compliance with local regulations and federal housing standards. Many Mansions will also administer tenant selection according to Project Homekey guidelines, prioritizing low-income households. In addition, the PM Agent would work to maintain positive tenant relations, with an emphasis on counseling and referrals, and would oversee both preventive maintenance and emergency repairs as needed.

The agreement would also require the PM Agent to comply with nondiscrimination laws, ensuring equal housing opportunities. Regular meetings with the City would be scheduled to provide updates and guidance on property management issues. The agent would collect rents, ensure lease compliance, and, when necessary, manage evictions. This arrangement is intended to ensure the efficient and professional management of the "Project Homekey" facility, supporting its mission of providing housing for vulnerable community members.

On July 24, 2025, staff issued a Request for Proposal (RFP) to qualified consultants for Property Management Services. The following consultant submitted a proposal:

1. Many Mansions, A California Nonprofit Corporation, Thousand Oaks, CA

In accordance with Chapter 2.16.180 of the City's Municipal Code, a selection committee reviewed the proposal based on the consultant's demonstrated competence and professional qualifications in accordance with the specific evaluation criteria identified in the RFP. The selection committee determined that Many Mansion is a qualified consultant to complete the tasks listed in the RFP. Many Mansions proposal was for $250,841 and staff is asking to consider a $300,000 professional agreement to cover software and additional maintenance needed at the property.

**ALTERNATIVES:**

City Council may choose not to approve the agreement and provide staff alternate direction.

**STRATEGIC PLAN:**

Priority B-4 Homelessness

**SUBMITTED BY:**
Christopher Boatman, Assistant City Manager

**RECOMMENDED BY:**
Charles M. Duggan Jr., City Manager

**REVIEWED BY:**
Yvette M. Abich Garcia, City Attorney
Janice McConnell, Assistant City Manager
Danielle Garcia, Management Services/Finance Director
Dana Abramovitz-Daniel, Procurement

**PREPARED BY:**
Ashley Rosario, Management Analyst

---

**Fiscal Impact**

| | |
|---|---|
| **Fiscal Year:** | FY 2026-28 |
| **Revenue Generating:** | N |
| **Appropriation Required Y/N:** | N |
| **Amount:** | $900,000 |
| **Budgeted Y/N:** | Y |
| **Account No.:** | 101126-126001 |

**Discussion:**

Adequate funds are allocated for the 2025-2028 Homeless Solutions Budget.

---

**Attachments**

Agreement
RFP

---

AGREEMENT TO PERFORM PROFESSIONAL SERVICES

This agreement for the provision of Homeless Resource Services providing property management services for the Project Homekey facility in Redlands, California ("Agreement") is made and entered in this 16th day of September, 2025 ("Effective Date"), by and between the City of Redlands, a municipal corporation ("City") and Many Mansions, a California nonprofit public benefit corporation (PM Agent), ("Consultant"). City and Consultant are sometimes individually referred to herein as a "Party" and, together, as the "Parties." In consideration of the mutual promises contained herein, City and Consultant agree as follows:

## ARTICLE 1 – ENGAGEMENT OF CONSULTANT

1.1 City hereby engages Consultant to provide PM Agent to provide homeless resources including providing property management services for a Project Homekey facility located at 1675 Industrial Park Ave., Redlands, California 92374 (Facility) services for City (the "Services").

1.2 The Services shall be performed by Consultant in a professional manner, and Consultant represents that it has the skill and the professional expertise necessary to provide the Services to City at a level of competency presently maintained by other practicing professional consultants in the industry providing like and similar types of Services.

## ARTICLE 2 – SERVICES OF CONSULTANT

2.1 The Services that Consultant shall perform are more particularly described in Exhibit "A," titled "Scope of Services," which is attached hereto and incorporated herein by this reference.

2.2 Consultant shall comply with applicable federal, state and local laws and regulations in the performance of this Agreement including, but not limited to, any applicable State prevailing wage laws.

## ARTICLE 3 – RESPONSIBILITIES OF CITY

3.1 City designates make available PM Agent information in its possession that may reasonably assist PM Agent in providing the Services, as City's representative with respect to performance of the Services, and such person shall have the authority to transmit instructions, receive information, interpret and define City's policies and decisions with respect to performance of the Services.

## ARTICLE 4 – PERFORMANCE OF SERVICES

4.1 PM Agent shall perform and complete the Services in a prompt and diligent manner in accordance with the schedule set forth in Exhibit "A," titled, "Scope of Services" ("Services") which is attached hereto and incorporated herein by this reference.

4.2 The term of this Agreement shall be for a period of one (1) year from the Effective Date of this Agreement (the "Initial Term"). The City shall have the option to extend the Initial Term of this Agreement by two (2) additional one-year terms (each, an "Extended Term"), on the same terms and conditions, by providing written notice to the PM Agent at least thirty (30) days prior to the expiration of the Initial Term or any Extended Term

4.3 If Consultant's Services include deliverable electronic visual presentation materials, such materials shall be delivered in a form, and made available to City, consistent with City Council-adopted policy for the same. It shall be the obligation of Consultant to obtain a copy of such policy from City staff.

## ARTICLE 5 – PAYMENTS TO CONSULTANT

The compensation for Consultant's performance of the Services shall not exceed the amount of [Three Hundred Thousand Dollars] ($300,000) for the Services provided during the Initial Term. Should this Agreement be extended, the compensation for Consultant's performance for the Services shall not exceed the amount of [Three Hundred Thousand Dollars] ($300,000) for the first Extended Term; and [Three Hundred Thousand Dollars] ($300,000) for the second Extended Term, bringing the total possible amount of compensation to a not-to-exceed amount of [Nine Hundred Thousand Dollars] ($900,000). For the Initial Term and each Extended Term, City shall pay Consultant on a time and materials basis up to the not to not-to-exceed amount in accordance with the rates specified in Exhibit "B," titled "Price and Fee Bid," which is attached hereto and incorporated herein by this reference.

5.1 Consultant shall submit monthly invoices to City describing the Services performed during the preceding month. Consultant's invoices shall include a brief description of the Services performed, the dates the Services were performed, the number of hours spent and by whom, and a description of reimbursable expenses related to the Services. City shall pay Consultant no later than thirty (30) days after receipt and approval by City of Consultant's invoice.

5.3 Any notice or other communication required, or which may be given, pursuant to this Agreement, shall be in writing. Any such notice shall be deemed delivered (i) on the date of delivery in person; (ii) five (5) days after deposit in first class registered mail, with return receipt requested; (iii) on the actual delivery date if deposited with an overnight courier; or (iv) on the date sent by facsimile or electronic mail transmission (including PDF), if confirmed with a copy sent contemporaneously by first class, certified, registered or express mail; in each case properly posted and fully prepaid to the appropriate address set forth below, or such other address as a Party may provide notice in accordance with this section:

| CITY: | CONSULTANT: |
| --- | --- |
| City Clerk<br>City of Redlands<br>35 Cajon Street<br>P.O. Box 3005 (mailing)<br>Redlands, CA 92373<br>jdonaldson@cityofredlands.org<br>Phone: (909) 798-7531 | Rick Schroeder, President & CEO<br>Many Mansions<br>1259 E. Thousand Oaks Blvd.<br>Thousand Oaks, CA 91362<br>rick@manymansions.org<br>Phone: (805) 496-4948 X227<br>Fax: (805) 497-1305 |

## ARTICLE 6 – INSURANCE AND INDEMNIFICATION

6.1 The following insurance coverage required by this Agreement shall be maintained by Consultant for the duration of its performance of the Services. Consultant shall not perform any Services unless and until the required insurance listed below is obtained by Consultant. Consultant shall provide City with certificates of insurance and endorsements evidencing such insurance prior to commencement of the Services. Insurance policies shall include a provision prohibiting cancellation or modification of the policy except upon thirty (30) days prior written notice to City.

A. Workers' Compensation and Employer's Liability insurance in the amount that meets statutory requirements with an insurance carrier acceptable to City, or certification to City that Consultant is self-insured or exempt from the workers' compensation laws of the State of California. Consultant shall execute and provide City with Exhibit "C," titled "Workers' Compensation Insurance Certification," which is attached hereto and incorporated herein by this reference, prior to performance of the Services.

B. Comprehensive General Liability insurance with carriers acceptable to City in the minimum amount of One Million Dollars ($1,000,000) per occurrence and Two Million Dollars ($2,000,000) aggregate, for public liability, property damage and personal injury is required. City shall be named as an additional insured and such insurance shall be primary and non-contributing to any insurance or self-insurance maintained by City.

C. Consultant shall secure and maintain professional liability insurance throughout the term of this Agreement in the amount of One Million Dollars ($1,000,000) per claim made.

D. Business Auto Liability coverage, with minimum limits of One Million Dollars ($1,000,000) per occurrence, combined single limit bodily injury liability and property damage liability. This coverage shall include all Consultant owned vehicles used in connection with Consultant's provision of the Services, hired and non-owned vehicles, and employee non-ownership vehicles. City shall be named as an additional insured and such insurance shall be primary and non-contributing to any insurance or self-insurance maintained by City.

E. Consultant is expressly prohibited from assigning or subcontracting any of the

Services without the prior written consent of City. In the event of mutual agreement by the Parties to assign or subcontract a portion of the Services, Consultant shall add such assignee or subcontractor as an additional insured to the insurance policies required hereby and provide City with the insurance endorsements prior to any Services being performed by the assignee or subcontractor.

6.2 Consultant shall defend, indemnify and hold harmless City and its elected and appointed officials, employees and agents from and against any and all claims, losses or liability, including attorneys' fees, arising from injury or death to persons or damage to property occasioned by any negligent act or omission by, or the willful misconduct of, Consultant, or its officers, employees and agents in performing the Services.

## ARTICLE 7 – CONFLICTS OF INTEREST

7.1 Consultant covenants and represents that it does not have any investment or interest in any real property that may be the subject of this Agreement or any other source of income, interest in real property or investment that would be affected in any manner or degree by the performance of Consultant's Services. Consultant further covenants and represents that in the performance of its duties hereunder, no person having any such interest shall perform any Services under this Agreement.

7.2 Consultant agrees it is not a designated employee within the meaning of the Political Reform Act because Consultant:

A. Does not make a governmental decision whether to:

(i) approve a rate, rule or regulation, or adopt or enforce a City law;
(ii) issue, deny, suspend or revoke any City permit, license, application, certification, approval, order or similar authorization or entitlement;
(iii) authorize City to enter into, modify or renew a contract;
(iv) grant City approval to a contract that requires City approval and to which City is a party, or to the specifications for such a contract;
(v) grant City approval to a plan, design, report, study or similar item;
(vi) adopt, or grant City approval of, policies, standards or guidelines for City or for any subdivision thereof.

B. Does not serve in a staff capacity with City and in that capacity, participate in making a governmental decision or otherwise perform the same or substantially the same duties for City that would otherwise be performed by an individual holding a position specified in City's Conflict of Interest Code under Government Code section 87302.

7.3 In the event City determines that Consultant must disclose its financial interests, Consultant shall complete and file a Fair Political Practices Commission Form 700, Statement of Economic Interests, with the City Clerk's office pursuant to the written instructions provided by the City Clerk.

## ARTICLE 8 – GENERAL CONSIDERATIONS

8.1 In the event any action is commenced to enforce or interpret any of the terms or conditions of this Agreement the prevailing Party shall, in addition to any costs and other relief, be entitled to the recovery of its reasonable attorneys' fees, including fees for the use of in-house counsel by a Party.

8.2 Consultant shall not assign any of the Services, except with the prior written approval of City and in strict compliance with the terms and conditions of this Agreement. Any assignment or attempted assignment without such prior written consent may, in the sole discretion of City, result in City's immediate termination of this Agreement.

8.3 Consultant is for all purposes under this Agreement an independent contractor and shall perform the Services as an independent contractor. Neither City nor any its agents shall have control over the conduct of Consultant or Consultant's employees, except as herein set forth. Consultant shall supply all necessary tools and instrumentalities required to perform the Services. Assigned personnel employed by Consultant are for its account only, and in no event shall Consultant or personnel retained by it be deemed to have been employed by City or engaged by City for the account of, or on behalf of City. Consultant shall have no authority, express or implied, to act on behalf of City in any capacity whatsoever as an agent, nor shall Consultant have any authority, express or implied, to bind City to any obligation.

8.4 This Agreement may be terminated by City, in its sole discretion, by providing not less than five (5) days prior written notice to Consultant of City's intent to terminate. If this Agreement is terminated by City, an adjustment to Consultant's compensation shall be made, but (1) no amount shall be allowed for anticipated profit or unperformed Services, and (2) any payment due Consultant at the time of termination may be adjusted to the extent of any additional costs to City occasioned by any default by Consultant. Upon receipt of a termination notice, Consultant shall immediately discontinue its provision of the Services and, within five (5) days of the date of the termination notice, deliver or otherwise make available to City, copies (in both hard copy and electronic form, where applicable) of project related data, design calculations, drawings, specifications, reports, estimates, summaries and such other information and materials as may have been accumulated by Consultant in performing the Services. Consultant shall be compensated on a pro-rata basis for Services completed up to the date of termination.

8.5 Consultant shall maintain books, ledgers, invoices, accounts and other records and documents evidencing costs and expenses related to the Services for a period of three (3) years, or for any longer period required by law, from the date of final payment to Consultant pursuant to this Agreement. Such books shall be available at reasonable times for examination by City at the office of Consultant.

8.6 This Agreement, including the Exhibits incorporated herein by reference, represents the entire agreement and understanding between the Parties as to the matters contained

herein, and any prior negotiations, written proposals or verbal agreements relating to such matters are superseded by this Agreement. Except as otherwise provided for herein, any amendment to this Agreement shall be in writing, approved by City and signed by City and Consultant.

8.7 This Agreement shall be governed by and construed in accordance with the laws of the State of California, without regard to its conflicts of laws provisions. The Parties agree that all actions or proceedings arising in connection with this Agreement shall be tried and litigated only in the state courts located in San Bernardino County, California, and the federal courts located in Riverside County, California.

8.8 If one or more of the sentences, clauses, paragraphs or sections contained in this Agreement is declared invalid, void or unenforceable by a court of competent jurisdiction, the same shall be deemed severable from the remainder of this Agreement and shall not affect, impair or invalidate the remaining sentences, clauses, paragraphs or sections contained herein, unless to do so would deprive a Party of a material benefit of its bargain under this Agreement.

IN WITNESS WHEREOF, duly authorized representatives of City and Consultant have signed in confirmation of this Agreement.

CITY OF REDLANDS

By: _____
Mario Saucedo, Mayor

MANY MANSIONS

By: _____
Rick Schroeder, President & CEO

ATTEST:

_____
Jeanne Donaldson, City Clerk

EXHIBIT "A"

SCOPE OF SERVICES

**A. BACKGROUND INFORMATION**

The property is a Homekey Program housing facility located at 1675 Industrial Park Ave., Redlands, California 92374. Serving formerly homeless individuals and represents a critical component addressing homelessness through dignified, stable housing solutions.

**B. PROJECT DESCRIPTION**

The property management company will be responsible for the day-to-day operations, maintenance, program monitoring, compliance with the Regulatory Agreement and other funding source requirements, compliance with tenant rental and income limits, and administration of a permanent housing facility that includes but is not limited to:

• Residential units
• Common areas and community spaces
• On-site laundry facilities
• Security systems
• Parking facilities
• Outdoor spaces

**C. SERVICES**

The selected property management company will be responsible for:

**1.Property Operations:**

a. Maintain 24/7 property coverage, including an on-site resident manager
b. Provide immediate communication to City staff in case of emergency
c. Implement and maintain a comprehensive maintenance program
d. Coordinate with service providers
e. Manage unit turnover and preparation
f. Ensure compliance with all applicable housing regulations and requirements
g. Maintain safety and security protocols
h. Coordinate pest control and janitorial services
i. Contract with and manage vendors, including but not limited to: Plumbing, HVAC, Electrical, Fire Alarm, Security, Janitorial, and Landscaping in compliance with applicable procurement and prevailing wage laws and regulations.
j. Provide detailed and timely accounting for all expenses incurred, including but not limited to maintaining a record of all hourly work completed by employees and vendors, bills received, and supplies ordered in connection with maintaining and operating the property.

**2. Financial Management**

a. Collect and process resident rent payments
b. Calculate tenant rental portion in accordance with state and federal laws and regulations.
c. Maintain accurate financial records and provide monthly reports
d. Prepare and manage the operating budget and expenses
e. Process vendor payments

f. Maintain required insurance coverage
g. Establish a segregated bank account for operating expenses for the purpose of maintaining funds available for property management, general maintenance, payments for supplies, equipment and services associated with maintaining and operating the property.

**3. Resident Services**
a. Process tenant applications, accept referrals from the Coordinated Entry System (CES) if and where required, and maintain waiting lists
b. Conduct move-in/move-out inspections
c. Respond to maintenance requests
d. Maintain resident files and records
e. Facilitate communication between residents and service providers
f. Ensure compliance with Fair Housing laws
g. Comply with the Coordinated Entry System for placement of residents.

**4. Facility Maintenance**
a. Perform routine preventive maintenance
b. Coordinate repairs and replacements
c. Maintain building systems (HVAC, plumbing, electrical)
d. Maintain ground maintenance and landscaping
e. Manage waste disposal and recycling programs
f. Conducts procurement for all service contracts and staffing following City procurement policies.
g. Assure that, where applicable, state prevailing wages are paid for work performed onsite based on the requirements of the applicable funding sources related to this property.

**5. Project Homekey/HCD Requirements**
PM Agent acknowledges to lease units in accordance with the project guidelines of the Project HomeKey Program administered by HCD.

a. Project Home-Key Specific Lease Provisions including the following:

| Redlands Good Nite Inn<br>1675 Industrial Park Ave<br>Redlands, CA 92374<br><br>County of San Bernardino | | | | Assessor Parcel Number (APN)<br>0292-063-38 | |
|---|---|---|---|---|---|
| # of Bedrooms | Units | Non-Homekey Units | Homekey Assisted Units | All Income Limit | Restriction to Subset of Target Population |
| Manager Unit | 1 | 0 | 1 | N/A | N/A |
| 0 (Studio) | 37 | 0 | 37 | 30% | At Risk of Homelessness |
| 0 (Studio) | 25 | 0 | 25 | 30% | Chronically Homeless |
| 0 (Studio) | 36 | 0 | 36 | 30% | N/A |
| Totals: | 99 | 0 | 99 | N/A | N/A |

b. PM Shall ensure that at least twenty five percent (25%) of the Project's Assisted Units are restricted to occupancy by the Chronically Homeless and PM shall ensure that at least fifty percent (50%) of the Project Assisted Units are restricted to occupancy by the Homeless.

6. The City shall furnish PM Agent with written descriptions of such requirements as they relate to PM Agent's leasing property management and fiscal management duties hereunder. Incident thereto, the following provisions shall apply:

a. PM Agent shall, prior to approving each rental application and prior to allowing prospective tenants to take occupancy, require each prospective tenant household to complete required forms and provide documentation to qualify application for residency. All applications will be submitted to Step Up's Compliance Department for approval.

b. The Compliance Department will verity program guidelines are followed. A Tenant Income Certification, Managers Certification, and Calculation sheet will be used to confirm annual income.

c. PM Agent is authorized without the City's prior consent to update forms, policies, and procedures to adhere to Project Homekey/HCD guidelines.

d. Without the City's prior written consent, PM Agent shall not enter into any lease on behalf of the City to a tenant household who fails to meet the income eligibility requirements for Project Homekey.

e. PM Agent shall maintain and preserve all written records of tenant income and household size, and any other information reasonably requested by the City in writing in connection with the Project HomeKey, throughout the term of the Agreement, and shall turn all such records over to the City upon the termination or expiration of this Agreement or upon written request of Owner.

f. PM Agent shall, to the extent such is within the scope of its authority and duties hereunder, comply with all leasing, management, reporting, and similar requirements in connection with the Project Homekey/HCD, whether such requirements be from a monitoring agency or any branch of government

g. PM Agent shall cause the building to be maintained in compliance with all local health, safety, and building codes to the extent of available funds, and shall promptly give written notice to the City if PM Agent receives notice of any such code violation relating to the building.

EXHIBIT "B"
Rate Sheet

| Fee | Base | Units | Monthly $ | Annual $ |
|---|---|---|---|---|
| Property Management | $81 PUPM | 98 | $7,938 | $95,256 |
| Financial Management | $13 PUPM | 98 | $1,274 | $15,288 |
| **Total** | | | **$9,212** | **$110,544** |

| Staff | FTE | Rate (Hourly) | Hours (Annual) | Annual $ |
|---|---|---|---|---|
| Property Management | 1.0 | $28.00 | $2,080 | $56,240 |
| Maintenance Tech | 1.0 | $27.00 | $2,080 | $56,160 |
| **Subtotal** | | | | $112,400 |
| ***Total Benefits, Taxes, etc.** | | | | $27,897 |
| **Total** | | | | **$140,297** |

***Payroll Taxes & Benefits include employer taxes, mileage reimbursements, and benefits.**

| Area | Amount |
|---|---|
| **Fees** | **$110,544** |
| **Reimbursed Personnel Costs** | **$140,297** |
| **Total** | **$250,841** |

EXHIBIT "C"

WORKERS' COMPENSATION INSURANCE CERTIFICATION

Every employer, except the State, shall secure the payment of compensation in one or more of the following ways:

(a) By being insured against liability to pay compensation by one or more insurers duly authorized to write compensation insurance in this State.

(b) By securing from the Director of Industrial Relations, a certificate of consent to self-insure, either as an individual employer, or as one employer in a group of employers, which may be given upon furnishing proof satisfactory to the Director of Industrial Relations of ability to self-insure and to pay any compensation that may become due to his or her employees.

CHECK ONE

_____I am aware of the provisions of Section 3700 of the Labor Code which requires every employer to be insured against liability for Workers' Compensation or to undertake self-insurance in accordance with the provisions of that Code, and I will comply with such provisions before commencing the performance of the work and activities required or permitted under this Agreement. (Labor Code §1861).

_____I affirm that at all times, in performing the work and activities required or permitted under this Agreement, I shall not employ any person in any manner such that I become subject to the workers' compensation laws of California. However, at any time, if I employ any person such that I become subject to the workers' compensation laws of California, immediately I shall provide the City with a certificate of consent to self-insure, or a certification of workers' compensation insurance.

I certify under penalty of perjury under the laws of the State of California that the information and representations made in this certificate are true and correct.

MANY MANSIONS

By:_____ Date: _____
Rick Schroeder, President & CEO

**PROPOSAL DOCUMENTS:**

## PROPOSAL COVER PAGE

**Name of Firm, Entity or Organization:**

Many Mansions, A California Nonprofit Corporation ('Many Mansions')

**Federal Employer Identification Number (EIN):** [redacted]

**State of California License Number (If Applicable):** Corporate Real Estate Brokers License is 02003927

**Name of Contact Person:** Rick Schroeder

**Title:** President & CEO

**E-Mail Address:** rick@manymansions.org

**Mailing Address:** 1259 E. Thousand Oaks Blvd.

**Street Address (if different):**

**City, State, Zip:** Thousand Oaks, CA 91362

**Telephone:** 805-496-4948 x227 **Fax:** 805-497-1305

**Organizational Structure – Please Check One:**

**Corporation** ☑ **Partnership** ☐ **Proprietorship** ☐ **Joint Venture** ☐ **Other** ☐

**If Corporation:**

**Date of Incorporation:** 08/24/1979 **State of Incorporation:** CA

**States Registered in as Foreign Corporation:**

**Authorized Signature:**

**Print Name:** Rick Schroeder

**Signature:**

**Title:** President & CEO

**Phone:** 805-496-4948 x227

***This document must be completed and returned with your Submittal.***

# Property Management Services for Homekey Housing Project

## RFP CMO20250724AR

**August 4, 2025**

Many Mansions

## Table of Contents


A. Cover Page ..... 1
B. Executive Summary ..... 4
C. Approach & Methodology ..... 5
1. Overview ..... 5
2. The Many Mansions Advantage: Full-Service Housing Expertise ..... 5
3. Phase 1: Pre Transition Planning (30–60 Days Prior) ..... 6
4. Phase 2: Transition & Operational Onboarding (Week 1) ..... 6
5. Phase 3: Stabilization & Integration (Weeks 2–4) ..... 7
6. Phase 4: Long Term Planning & Affordability Preservation (Month 2–3) ..... 7
7. Ongoing Methodology: Integrity, Integration, and Impact ..... 8
D. Fee/Cost Proposal ..... 9
E. Firm Information/Organization ..... 11
F. Staffing ..... 12
G. References ..... 15
H. Sample Work ..... 17
I. Additional Comments ..... 17
J. Appendix "1"--Managed Properties ..... 18
K. Appendix '2'--Supplemental Documents ..... 20

## B. Executive Summary

Many Mansions hereby submits its proposal to provide full-service property management, maintenance, and financial services to the Homekey Permanent Supportive Housing facility identified in the City's Request for Proposal.

Many Mansions is a nonprofit affordable housing and service provider. It has developed and currently manages 21 affordable housing rental communities in Ventura and Los Angeles counties (800+ units). A list of these properties is located in Appendix '1' (Section J).

Many Mansions is also one of the leading developers and managers of supportive housing—affordable housing for individuals and families coming from homelessness. The organization provides a substantial youth, supportive, and adult services staff providing case management, life skills, and other service programs to its residents.

Thus, Many Mansions' approach to this engagement is not just as a property manager--- but as a nonprofit organization, as an affordable housing developer, as a financial manager of apartments, and as a services provider for a supportive housing population.

Therefore, we can provide the City much more than our property management skills as it transitions this property into greater financial and ownership stability.

Nevertheless, this narrative discusses in detail our property management and financial management approach, methodology, and fee structure. In Section C we discuss our basic approach and methodology—what actions and steps we will take over the next months to get this property fully operational. Section D discusses our Fee/Cost Proposal. In general Many Mansions would charge a fee based upon a per unit per month formula that is approved by HCD for our existing properties.

Sections E and F discuss the staffing for this assignment. In general, Many Mansions would use a 'team' approach toward the management, meaning many staff members would contribute. Nevertheless, there would be two on-site staff members: one Property Manager (1.0 FTE) and one Maintenance Tech (1.0 FTE).

Section G gives a few references regarding our work and standing in the community. Section H (and Appendix '2') discuss a recent Homekey + project in collaboration with the County of Ventura that will have Many Mansions as the property manager and services provider for an 88-unit new supportive housing property. Appendix '2' (Section K) contains all the other 'supplemental documents' requested in the RFP.

--Rick Schroeder, President & CEO

## C. Approach & Methodology

1. Overview

Many Mansions proposes to provide all the tasks set out in the RFP's Scope of Services (Section 2). Many Mansions would fully oversee and manage the entire affordable housing community, including its residential units, common areas, outdoor spaces, parking facilities, etc. Many Mansions would perform all tasks described as Property Operations, Financial Management, and Resident Services (See RFP, Section 2 (C)).

Many Mansions is uniquely qualified to provide these services. We bring over four decades of experience in deeply affordable and permanent supportive housing (PSH) for extremely low income and vulnerable populations. Our approach is grounded in trauma informed, resident centered practices, a proven operational methodology, and a vertically integrated model that includes property management, financial management, resident services, real estate development, and an in-house compliance department.

This cross functional structure allows us to operate more efficiently, respond more quickly, and ensure quality management across every layer of housing from occupancy to long term asset management. Our model ensures housing stability and programmatic compliance while centering resident wellness and property performance.

2. The Many Mansions Advantage: Full-Service Housing Expertise

Unlike siloed service providers or third-party managers, Many Mansions is a fully integrated affordable housing organization. This structure offers significant benefits, including:

- A dedicated in-house Compliance Department that ensures adherence to HUD, LIHTC, HCD, and local regulations;
- Streamlined coordination between compliance, services, operations, and finance—reducing errors and delays;
- Direct oversight of application processing, income certifications, and recertifications;
- Immediate internal auditing and quality control mechanisms;
- Proactive responses to programmatic changes and policy updates; and
- Expertise in complex layered funding programs and multi-agency reporting.

This all-in-one approach enables us to protect the affordability and regulatory standing of our properties while focusing on long-term outcomes for residents.

### 3. Phase 1: Pre Transition Planning (30-60 Days Prior)

**Approach**
Establish foundational knowledge, build transition infrastructure, ensure continuity of operations, compliance, and resident care.

**Key Activities**
**Property Operations**
- Conduct comprehensive building and systems assessment.
- Prepare customized Property Management Plan and implementation.
- Begin onboarding or evaluating existing staffing and vendor relationships.

**Financial Management**
- Analyze rent rolls, general ledgers, and subsidy contracts.
- Integrate financial systems for streamlined reporting.
- Identify budget gaps and begin long term planning.

**Resident Services**
- Evaluate existing service delivery model.
- Plan for integration of trauma informed housing first services.
- Identify high acuity households and service coordination needs.

**Compliance**
- Review all existing regulatory agreements and income restrictions, if any.
- Conduct 100% file review and prepare for income certification transitions.
- Develop compliance checklist and calendar for ongoing monitoring.
- Confirm program eligibility alignment across all households.

### 4. Phase 2: Transition & Operational Onboarding (Week 1)

**Approach**
Ensure seamless operational handoff and immediate alignment with Many Mansions' standards of care, compliance, and performance.

**Key Activities**
**Property Operations**
- Launch on site management, maintenance, and response systems including Yardi Voyager setup.
- Implement internal policies for lease enforcement, work orders, and emergency procedures.

**Financial Management**
- Transition rent collection, subsidy billing, and vendor payments.
- Begin cost tracking and budget monitoring.

**Resident Services**
- Introduce teams and begin early engagement and check ins.
- Identify urgent needs and link residents to critical services.

**Compliance**

- Transition tenant files to Many Mansions' systems.
- Ensure income limits, rent restrictions, and lease terms are in alignment.
- Establish audit protocols and recertification timelines.

5. Phase 3: Stabilization & Integration (Weeks 2–4)

**Approach:**
Promote operational consistency, deepen resident engagement, and build a stable compliance and financial foundation.

**Key Activities**
**Property Operations**

- Resolve deferred maintenance.
- Begin preventative maintenance program.
- Build staff cohesion through site coordination meetings.

**Financial Management**

- Monitor collections and budget variance.
- Forecast short term cash flow needs.

**Resident Services**

- Formalize Individualized Housing Stability Plans.
- Launch programming focused on life skills, recovery, and wellness.

**Compliance**

- Conduct internal compliance audit on all move in files.
- Begin resident recertification process.
- Train on-site staff on fair housing, file documentation, and eligibility standards.

6. Phase 4: Long Term Planning & Affordability Preservation (Month 2–3)

**Approach**
Solidify sustainable operations, ensure long term affordability, and expand funding opportunities.

**Key Activities**
**Property Operations**

- Evaluate and enhance property protocols, staffing, and resident relations.

**Financial Management**

- Develop and submit financial reports to funders and stakeholders.
- Explore new funding sources including:
    - Project Based Vouchers (PBVs);

- HCD Multifamily Housing Program (MHP), No Place Like Home (NPLH), HomeKey Continuum of Care, Prop 1; and
- Local or county subsidy programs.

**Resident Services**

- Scale up resident engagement and monitor service impact.
- Expand partnerships with community providers and behavioral health networks.

**Compliance**

- Work to secure a new or updated affordability agreement, ensuring. continued affordability for extremely low-income residents.
- Ensure all funder and regulatory reporting requirements are met.
- Maintain readiness for third party audits or monitoring visits.

7. Ongoing Methodology: Integrity, Integration, and Impact

Many Mansions' long term operational approach emphasizes:

- Robust internal compliance and oversight, reducing risk and improving audit outcomes.
- Integrated collaboration between Property Management and Resident Services to promote housing retention.
- Streamlined systems that increase efficiency, communication, and accountability.
- Ongoing staff training to ensure equitable, fair, and trauma informed resident interactions.
- Outcome driven planning, using data to refine operations and improve lives.

## D. Fee/Cost Proposal

This cost proposal outlines the estimated annual fees associated with providing full-service property management, financial management, and maintenance services, including onsite staffing, regional oversight, and all related administrative and operational support.

The 'fees' charged to the property are the 'property management fee' and the 'bookkeeping/financial services' fee. These fees are based upon a per unit per month (PUPM) charge:

| Fee | Base | Units | Monthly $ | Annual $ |
|---|---|---|---|---|
| Property Management | $81 PUPM | 98 | $7,938 | $95,256 |
| Financial Management | $13 PUPM | 98 | $1,274 | $15,288 |
| | | **Total** | **$9,212** | **$110,544** |

It should be noted that all costs for supervisor (e.g., Regional Managers, Vice Presidents, financial staff, etc.) and compliance, comes out of these fees.

In addition, these fee rates are allowed by HCD for all our existing affordable housing properties.

However, the property budget would reimburse Many Mansions for the payroll costs of the on-site staff. As discussed in Section F, this includes one onsite Property Manager (1.0 FTE) and one Maintenance Tech (1.0 FTE). Their estimated costs are as follows:

| Staff | FTE | Rate (hourly) | Hours (annual) | Annual $ |
|---|---|---|---|---|
| Property Manager | 1.0 | $28.00 | 2,080 | $56,240 |
| Maintenance Tech | 1.0 | $27.00 | 2,080 | $56,160 |
| | | | **Subtotal** | $112,400 |
| | | | ***Total Benefits, Taxes, etc.** | $27,897 |
| | | | **Total** | **$140,297** |

*Payroll Taxes & Benefits include employer taxes, mileage reimbursements, and benefits

Thus, the total fees for property management, financial management, and maintenance would be as follows:

| **Area** | **Amount** |
|---:|---|
| Fees | $110,544 |
| Reimbursed Personnel Costs | $140,297 |
| **Total** | **$250,841** |

Note: there may be additional costs. For example, there would be fees for Yardi (property management software), maintenance supplies, etc. These would all be part of the Property Budget.

## E. Firm Information/Organization

Many Mansions is a California nonprofit organization incorporated in 1979. It is a 501(c)(3) tax-exempt organization with a charitable mission of providing affordable housing and residential services to low-income households. Many Mansions currently has 95 staff members.

Many Mansions develops and manages affordable housing communities, especially supportive housing communities. Appendix '1' (Section K) contains a current list of the 21 affordable housing properties Many Mansions currently manages and the ones that are supportive housing. In total, Many Mansions manages 11 supportive housing communities with 236 restricted units for formerly homeless individuals and families. In addition, Many Mansions currently has three projects in construction—all supportive housing (117 units).

Property Management is Many Mansions' largest division.

The 'Account Manager' for this management would be Enrique (Ricky) Brown, the Vice President of Property Management for Many Mansions.

A more detailed discussion on roles, responsibilities, and staffing are contained in Section F.

## F. Staffing

The staffing for this engagement would be as follows:

| No. | Staff Member | Position | Qualifications | Role |
|---|---|---|---|---|
| 1 | Rick Schroeder | President | See attached resume | General oversight |
| 2 | Doug Menges | Executive Director | See attached resume | General oversight |
| 3 | Enrique (Ricky) Brown | Senior Vice President of Property Management | See attached resume | General oversight |
| 4 | Cailan Lu | Vice President of Finance and Administration | See attached resume | Financial oversight |
| 5 | Dalit Shlapobersky | Executive Vice President | See attached resume | Resident services oversight |
| 6 | Maria Ortiz | Senior Regional Manager | See attached resume | Property management oversight |
| 7 | (TBD) | Property Management (Community Manager) | | Property management operations |
| 8 | (TBD) | Maintenance Technician | | Maintenance oversight |

As you can see, we do not currently have the Property Manager or the Maintenance Technician. We would use our existing Property Management staff until we hire these positions.

Our staffing and our management has these key features:

- Support
- Accessibility
- Quality Assurance and Staffing Optimization

**Support:**

Many Mansions maintains a highly coordinated organizational structure designed to maximize efficiency, support staff in the field, and ensure accountability across departments. The property management, compliance,

maintenance, and resident services teams operate under a unified leadership framework, with clear roles and streamlined communication channels. Each site team is supported by Regional Managers, Compliance Specialists, and Administrative staff who provide direct oversight, technical support, and resource coordination.

Additionally, Many Mansions employs a centralized Housing Central unit responsible for processing applications, maintaining waitlists, coordinating move-ins, and assisting with recertifications. This centralization allows site teams to focus on resident engagement, property oversight, and timely issue resolution.

**Accessibility:**

Many Mansions prioritizes staff accessibility to both internal resources and external stakeholders. The organization provides:

- **Cloud-based systems** (e.g., Yardi) for real-time access to resident files, maintenance requests, and compliance data.
- **Internal knowledge-sharing platforms** and document libraries.
- **Dedicated departmental contacts** (e.g., compliance, HR, IT) for quick resolution of issues.
- **Regular team check-ins** via Zoom or in-person meetings to foster alignment across sites and departments.

Staff are also equipped with remote work capabilities, allowing for flexibility in responding to urgent tasks or site needs.

**Quality Assurance and Staff Optimization:**

Many Mansions uses a layered quality assurance approach to ensure staff are performing at optimal levels while maintaining compliance and service standards. These methods include:

- **Regular compliance audits** (both internal and third-party) to identify gaps and provide coaching.
- **File reviews and pre-audit checklists** to ensure documentation accuracy and readiness.
- **Site performance dashboards** tracking occupancy, recertification timeliness, maintenance response, and resident satisfaction.
- **Monthly site coordination meetings** where trends are discussed, and corrective actions are planned.

**Training and cross-training programs** for skill development and job coverage during absences or surges in demand.

**Workload balancing** through centralized functions, allowing redistribution of tasks (e.g., move-in packets, income calculations) to off-site staff when site teams are overburdened.

By leveraging centralization, cross-functional communication, and a culture of continuous improvement, Many Mansions ensures staff are supported, performance is monitored, and operations remain compliant and resident-focused.

## G. References

Many Mansions is well known in the communities it serves. Indeed, Many Mansions is the leading provider of supportive housing in Ventura County.

The following are three references that can speak to the quality and impact Many Mansions has had in affordable housing property management:

| No. | Person | Contact | Comment |
|---|---|---|---|
| 1 | **Michael Nigh**<br>Executive Director<br>Area Housing Authority of Ventura County | mnigh@ahacv.org<br><br>805.480.9991 x625 | --The Area Housing Authority has had a 46-year relationship with Many Mansions;<br>-- The Area Housing Authority administers the Section 8 program in (most) of Ventura County;<br>--The Area Housing Authority has been a joint-venture partner in many affordable developments since 2018; |
| 2 | **Andrew Powers**<br>City Manager<br>City of Thousand Oaks | apowers@toaks.gov<br>(805) 449-2148 | --The City of Thousand Oaks has had a 46-year relationship with Many Mansions;<br>--Many Mansions is the provider of the most affordable housing communities (8 communities) in Thousand Oaks;<br>--City Manager Powers has had a close working relationship with Many Mansions since 2012. |
| 3 | Frank Thompson | frank@thompsonhousing.com<br><br>(805) 895-2453 | --Many Mansions began to manage an affordable housing property Mr. Thompson owns (in |

| No. | Person | Contact | Comment |
|---|---|---|---|
| | | | partnership) in the City of Santa Barabara known as Rancheria Village;<br>--Many Mansions began management in January 2025 |

## H. Sample Work

Accompanying this response is a Response to a Request for Qualifications issued by the County of Ventura submitted on February 25, 2025, for the property management and services provider for a potential supportive housing project funded under the Homekey + program.

On March 5, 2025, the County of Ventura selected Many Mansions for these roles and to be co-applicant for the Homekey + application (along with the DignityMoves as the developer).

The project is 88 units of supportive housing in several modular buildings.

On July15, 2025 the State (HCD) awarded $27.97 million in Homekey + funding for the project.

## I. Additional Comments

Thank you for giving us this opportunity to assist the City of Redlands with the management of this important property.

Please let us know if you have any questions or require further information. Thank you.

--Rick Schroeder, President & CEO

## J. Appendix "1"--Managed Properties

| No. | Property | Units | Jurisdiction | Supportive Housing (X) (100% or mixed) | Many Mansions Provides Supportive Housing Services |
|---|---|---|---|---|---|
| 1 | Bella Vista Apartments | 72 | Thousand Oaks | | |
| 2 | Casa Garcia Apartments | 14 | Santa Paula | | |
| 3 | Casa De Paz Apartments | 14 | Simi Valley | X | X |
| 4 | Central Terrace | 87 | Oxnard | X | X |
| 5 | D Street Apartments | 8 | Oxnard | X | X |
| 6 | Esseff Village Apartments | 51 | Thousand Oaks | X | X |
| 7 | Hacienda De Feliz Apartments | 25 | Thousand Oaks | | |
| 8 | Hillcrest Villas Apartments | 60 | Thousand Oaks | X | X |
| 9 | La Rahada Apartments | 8 | Simi Valley | X | X |
| 10 | Mountain View | 77 | Fillmore | X | X |
| 11 | Ormond Beach Villas | 40 | Oxnard | | |
| 12 | Peppertree Apartments | 12 | Simi Valley | X | X |
| 13 | Rancheria Village | 14 | Santa Barbara | | |

| No. | Property | Units | Jurisdiction | Supportive Housing (X) (100% or mixed) | Many Mansions Provides Supportive Housing Services |
|---|---|---|---|---|---|
| 14 | Richmond Terrace Apartments | 27 | Thousand Oaks | X | X |
| 15 | Schillo Gardens Apartments | 29 | Thousand Oaks | | |
| 16 | Shadow Hills Apartments | 101 | Thousand Oaks | | |
| 17 | Stoll House Apartments | 11 | Thousand Oaks | | |
| 18 | Summit View | 49 | City of Los Angeles (Sylmar Terrace) | X | |
| 19 | Sun King | 26 | City of Los Angeles (Sun Valley) | X | |
| 20 | Terry's Place | 2 | Oxnard | | |
| 21 | Villa Garcia Apartments | 80 | Thousand Oaks | | |
| | **Total** | **807** | | | |

## K. Appendix '2'--Supplemental Documents

The following set of documents contains the following:

| Attachment | Document | Reference to Narrative |
|---|---|---|
| 1 | Proposer's Certification | |
| 2 | Exceptions or Deviations to Specifications | |
| 3 | California Corporate Real Estate License(s) | § E (Firm Information) |
| 4 | Resumes | § F (Staffing) |
| 5 | Many Mansions Response to Request for Qualifications (County of Ventura—Homekey + Project) | § H (Sample Work) |

**City Council/Financing Authority Meeting** **K. 2.**

**DATE:** 09/16/2025

**TO:** Honorable Mayor and City Council Members

**SUBJECT:** Consideration of the 2025-2026 Community Development Block Grant (CDBG) in the amount of $326,470 from the County of San Bernardino, approve an additional appropriation of the same, and adopt Resolution No. 8715 authorizing the City Manager, or designee, to execute the Grant Agreement and all other related documents (Development Services Director Desatnik)

---

**MOTION(S):**

If the City Council determines that staff's recommendations are appropriate, the following motions are provided:

1. I move that the City Council accept the 2025-2026 Community Development Block Grant funding award in the amount of $326,470; and

2. Authorize an additional appropriation of $326,470 for the 2025-2026 CDBG fiscal year; and

3. I further move to adopt Resolution No. 8715 authorizing the City Manager, or designee, to execute agreements, amendments and other related documents associated with the 2025-2026 CDBG Program Year.

**RECOMMENDATION:**

Staff recommends that the City Council accept the grant award for the 2025-2026 CDBG Program Year from the County of San Bernardino in the amount of $326,470 and adopt Resolution No. 8715 authorizing the City Manager, or designee, to execute agreements, amendments and other related documents associated with the 2025-2026 CDBG Program Year.

**DISCUSSION:**

In January 2025, the Development Services Department (Department) submitted the 2025-2026 CDBG Program Year grant funding request on behalf of the City of Redlands (City) to the County of San Bernardino (County) for the amount of $326,470. In March 2025, the County submitted the 2025-2026 Annual Action Plan Consolidated Submission for HUD Housing and Community Development Grants to the Department of Housing and Urban Development (HUD). On August 6, 2025, the City was notified of the final 2025-2026 CDBG final funding award for six (6) total projects that were approved by City Council on December 17, 2024, (Item No. L.5.) of which five (5) projects are community-based organizations and one (1) is a Capital Improvement Project (CIP). The final award and amounts are as follows:

| **Final Approved Projects/Programs** | **Award Amount** |
|---|---|
| Redlands Sylvan Park Restroom & ADA Improvements | $279,770 |
| FSA of Redlands - Housing and Food Program | $ 9,340 |
| Boys and Girls Club - Family Strengthening Program | $ 9,340 |
| YMCA of the East Valley - Legal Services | $ 9,340 |
| Girls on the Run - Youth Fitness Program | $ 9,340 |
| Partners Against Violence - Supportive Services for Victims of Violence | $ 9,340 |

Resolution No. 8715 authorizes the City Manager, or designee, to execute the agreements, any amendments and other related documents associated with the 2025-2026 CDBG Program Year grant funding.

**ALTERNATIVES:**

City Council may elect not to approve these actions. However, electing not to approve these actions may result in a loss or reduction of CDBG funding and impacts on existing and future CDBG projects.

**STRATEGIC PLAN:**

Not applicable.

**SUBMITTED BY:**
Brian Desatnik, Development Services Director

**RECOMMENDED BY:**
Charles M. Duggan Jr., City Manager

**REVIEWED BY:**
Yvette M. Abich Garcia, City Attorney
Janice McConnell, Assistant City Manager
Christopher Boatman, Assistant City Manager
Danielle Garcia, Management Services/Finance Director

**PREPARED BY:**
Tricia Munoz, Development Services/Management Analyst

---

## Fiscal Impact

| | |
|---|---|
| **Fiscal Year:** | 2025-2026 |
| **Revenue Generating:** | N |
| **Appropriation Required Y/N:** | Yes |
| **Amount:** | $326,470 |
| **Budgeted Y/N:** | No |
| **Account No.:** | 200164 |

**Discussion:**

Acceptance of this award will increase the FY 2025-2026 appropriation for Planning Grants (200164) by $326,470. Approval of this item has no impact on the General Fund.

---

## Attachments

Resolution for 2025-2026 CDBG Funding
Additional Appropriation Form
Award Notification
CBO Project Listing
2025-2026 Program Funding Request

---

RESOLUTION NO. 8715

A RESOLUTION OF THE CITY COUNCIL OF THE CITY OF REDLANDS AUTHORIZING THE GRANT ACCEPTANCE AND EXECUTION OF THE GRANT FUNDS FROM THE COUNTY OF SAN BERNARDINO COMMUNITY DEVELOPMENT BLOCK GRANT PROGRAM FOR THE 2025-26 PROGRAM YEAR

WHEREAS, the City of Redlands ("City") is eligible to receive federal funding for certain community development block grants, through the County of San Bernardino Community Development and Housing Department ("County"); and

WHEREAS, the City is a participating jurisdiction in the San Bernardino County Final 2025-2026 Annual Action Plan of the 2020-2025 Consolidated Plan of the HUD Housing and Community Development Grant Programs; and

WHEREAS, the County issued a Notice of Funding Availability ("NOFA") dated September 24, 2024, for the 2025-2026 Community Development Block Grant Program Year ("CDBG"); and

WHEREAS, the County has been delegated the responsibility for the administration of this grant program, establishing necessary procedures; and

WHEREAS, the City Council of the City of Redlands (this "City Council") desires to execute agreements with Community Based Organizations (CBOs) who submitted applications for 2025-2026 CDBG Program Year to provide public services as described in the 2025-2026 CDBG NOFA; and

WHEREAS, the City has been granted to receive a CDBG grant award of $326,470; and

WHEREAS, this City Council wishes to delegate authorization to execute the grant agreement, subrecipient agreements, any amendments, and other related documents thereto to the City Manager or his designee; and

WHEREAS, the City has the legal authority and is authorized to enter into a funding agreement with the County of San Bernardino.

NOW, THEREFORE, BE IT RESOLVED BY THE CITY OF REDLANDS, WITH ACKNOWLEDGEMENT OF DEVELOPMENT SERVICES, AS FOLLOWS:

Section 1. The above recitals are true and correct and are incorporated herein by this reference.

Section 2. Pursuant and subject to all the terms and provisions of the County of San Bernardino Community Development Block Grant Program, the City Manager of the City of Redlands, or designee is hereby authorized and directed to accept funding from the County of San Bernardino and take such other actions necessary to receive and administer the grant funding.

Section 3. The City Manager of the City of Redlands, or designee is hereby authorized and directed to execute the funding agreements, any amendments, and other related documents thereto with the County of San Bernardino and subrecipients of the program funding.

Section 4. The City Manager of the City of Redlands, or designee is hereby authorized and directed to submit any required documents, funding requests, and reports required for the grant funding.

Section 5. The City Manager of the City of Redlands, or designee, is designated to represent the City in carrying out the responsibilities under the grant agreement, including certifying disbursement requests on behalf of the City and compliance with applicable state and federal laws.

Section 6. The City certifies that the project will comply with any laws and regulations including, but not limited to, the California Environmental Quality Act (CEQA), legal requirements for building codes, health and safety codes, the California Labor Code, disabled access laws, and, that prior to commencement of the project, all applicable permits will have been obtained.

Section 7. Applicant acknowledges and agrees that it shall be subject to the terms and conditions specified in the Agreement, and that the NOFA and Application are incorporated in the Agreement by reference and made a part thereof. Any and all activities, expenditures, information, and timelines represented in the Application are enforceable through the Agreement. Funds are to be used for the allowable expenditures and activities identified in the Agreement.

Section 8. Effective Date. This Resolution shall become effective immediately

ADOPTED, SIGNED AND APPROVED this 16th day of September 2025

_____
Mario Saucedo, Mayor

ATTEST:

_____
Jeanne Donaldson, City Clerk

I, Jeanne Donaldson, City Clerk of the City of Redlands, hereby certify that the foregoing Resolution No. 8715 was duly adopted by the City Council at a regular meeting thereof held on the 16th day of September 2025, by the following vote:

AYES:
NOES:
ABSENT:
ABSTAIN:

_____
Jeanne Donaldson, City Clerk

# CITY OF REDLANDS
# REQUEST FOR ADDITIONAL APPROPRIATION

DATE OF REQUEST: 09/16/2025

| FINANCE USE ONLY |
|---|
| TRANSACTION NO: |
| ACCOUNTING PERIOD: |

An additional appropriation is hereby requested as follows:

Department: Development Services

| EXPENDITURE APPROPRIATION INCREASE (if applicable) | | | | |
|---|---|---|---|---|
| **Account Description** | **Orgkey** | **Object Code** | **Job Ledger (If applicable)** | **Amount** |
| Construction | 200164 | 7230 | TBD | $279,770 |
| Special Contractual Services | 200164 | 6710 | F164005 | $9,340 |
| Special Contractual Services | 200164 | 6710 | F164003 | $9,340 |
| Special Contractual Services | 200164 | 6710 | F164007 | $9,340 |
| Special Contractual Services | 200164 | 6710 | F164004 | $9,340 |
| | | | | $ 317,130 - |

| REVENUE APPROPRIATION INCREASE (if applicable) | | | | |
|---|---|---|---|---|
| **Account Description** | **Orgkey** | **Object Code** | **Job Ledger (If applicable)** | **Amount** |
| Federal Grants | 200164 | 4407 | TBD | $279,770 |
| Federal Grants | 200164 | 4407 | F164005 | $9,340 |
| Federal Grants | 200164 | 4407 | F164003 | $9,340 |
| Federal Grants | 200164 | 4407 | F164007 | $9,340 |
| Federal Grants | 200164 | 4407 | F164004 | $9,340 |
| | | | | $ 317,130 - |

JUSTIFICATION: Add appropriation for the 2025-2026 Community Development Block Grant Program Year. These amounts have been provided by the San Bernardino County CDBG Program Coordinator.

Requested By: Brian Desatnik
Department Head

Recommended By Finance Director:

Yes _____ No _____ Signed _____

Comments: _____

Recommended: _____
City Manager

Approved by City Council:

Date: _____

Signed: _____
City Clerk

# CITY OF REDLANDS
# REQUEST FOR ADDITIONAL APPROPRIATION

DATE OF REQUEST: 09/17/2025

| FINANCE USE ONLY |
|---|
| TRANSACTION NO: |
| ACCOUNTING PERIOD: |

An additional appropriation is hereby requested as follows:

Department: Development Services

| EXPENDITURE APPROPRIATION INCREASE (if applicable) | | | | |
|---|---|---|---|---|
| **Account Description** | **Orgkey** | **Object Code** | **Job Ledger (If applicable)** | **Amount** |
| Special Contractual Services | 200164 | 6710 | TBD | $9,340 |
| | | | | |
| | | | | |
| | | | | |
| | | | | |
| | | | | $ 9,340 - |

| REVENUE APPROPRIATION INCREASE (if applicable) | | | | |
|---|---|---|---|---|
| **Account Description** | **Orgkey** | **Object Code** | **Job Ledger (If applicable)** | **Amount** |
| Federal Grants | 200164 | 4407 | TBD | $9,340 |
| | | | | |
| | | | | |
| | | | | |
| | | | | |
| | | | | $ 9,340 - |

JUSTIFICATION: Add appropriation for the 2025-2026 Community Development Block Grant Program Year. These amounts have been provided by the San Bernardino County CDBG Program Coordinator.

Requested By: Brian Desatnik
Department Head

Recommended By Finance Director:

Yes _____ No _____ Signed _____

Comments: _____

Recommended: _____
City Manager

Approved by City Council:

Date: _____

Signed: _____
City Clerk

**From:** CDBG, Info
**To:** Tricia Munoz
**Cc:** Graham, Kelly
**Subject:** CDBG Program Award Notification – Program Year 2025–26
**Date:** Wednesday, August 6, 2025 9:18:06 AM
**Attachments:** image001.png
image002.png
image003.png
image004.png
image005.png
image006.png
image007.png
Redlands 2025-26 CBO Projects.pdf

---

[**NOTICE:** This message originated outside of City of Redlands -- **DO NOT CLICK** on **links** or open **attachments** unless you are sure the content is safe.]

Dear Ms. Munoz,

We are pleased to inform you that the following programs have been approved for Community Development Block Grant (CDBG) funding as part of San Bernardino County's Program Year (PY) 2025–26 Annual Action Plan:

| Project Number | Approved Program | Award Amount |
|---|---|---|
| REDL-25-1-03F/0331 | Redlands: Sylvan Park Restroom Replacement and ADA Improvement Project | $279,770 |
| REDL-25-1-05C/7511 | Redlands: Legal Services - YMCA of the East Valley | $9,340 |
| REDL-25-1-05G/7538 | Redlands: Supportive Services for Victims of Violence - Partners Against Violence | $9,340 |
| REDL-25-1-05Q/7512 | Redlands: Housing and Food Program – FSA of Redlands | $9,340 |
| REDL-25-1-05W/0283 | Redlands: Family Strengthening Program - Boys and Girls Club | $9,340 |
| REDL-25-1-05Z/0332 | Redlands: Girls on the Run | $9,340 |

Please review the following next steps to ensure timely execution of your CDBG-funded activities:

**Preparation of Attachment A & B Agreements**

In the coming weeks, our office will prepare the Attachment A&B documents for each approved activity. These agreements must be signed before any CDBG-funded work may begin. Once received, please review the drafts carefully. If no changes are needed, sign and return them promptly. Our goal is to have all agreements fully executed by August 29, 2025.

**Contracts with Community-Based Organizations**

Several of the City's approved CDBG activities involve public service programs to be delivered by Community-Based Organizations (CBOs). The City is responsible for initiating and executing contracts with each CBO to carry out these services. CDH can provide a sample agreement upon request. A list of the approved CBO partners is attached for your reference. Please ensure that copies of all executed agreements are submitted to CDH for monitoring purposes.

**Compliance and Grant Requirements**

Please be advised that no construction or service activity may begin—and no costs may be incurred—until the Attachment A&Bs have been signed by CDH. This requirement is mandated by HUD and County contracting policy. Any expenses incurred before execution are not eligible for reimbursement, and any work performed in anticipation of funding is at the City's own risk.

If you have any questions or need assistance during this process, please contact Kelly Graham at (909) 501-0626 or Kelly.Graham@cdh.sbcounty.gov.

Thank you for your continued partnership. We look forward to supporting your efforts throughout the upcoming program year.

Sincerely,

**Community Development Division**
Community Development Block Grant
***Community Development and Housing Department***
**https://cdh.sbcounty.gov/**
Phone: 909-501-0600
560 E. Hospitality Lane, Suite 200
San Bernardino, CA 92415-0043

***Our job is to create a county in which those who reside and invest can prosper and achieve well-being.***
***www.SBCounty.gov***

*County of San Bernardino Confidentiality Notice: This communication contains confidential information sent solely for the use of the intended recipient. If you are not the intended recipient of this communication, you are not authorized to use it in any manner, except to immediately destroy it and notify the sender.*

City of Redlands
2025-26 CDBG CBO Projects

| Project # | Project Title | Amount Awarded | Applicant |
|---|---|---|---|
| REDL-25-1-05C/7511 | Redlands: YMCA of the East Valley - Legal Services | $9,340 | Brandi Collato, Chief Executive Officer<br>YMCA of the East Valley<br>500 E. Citrus Avenue<br>Redlands, CA 92373<br>bcollato@ymcaeastvalley.org<br>909-798-9622 ext. 7107 |
| REDL-25-1-05G/7538 | Redlands: Supportive Services for Victims of Violence - PAV | $9,340 | Cassandra Black, Associate Director of Operations<br>Partners Against Violence<br>444 N. Arrowhead Ave, Ste. 101<br>San Bernardino, CA 92401<br>Cassandra.b@partnersav.org<br>909-885-8884 |
| REDL-25-1-05Q/7512 | Redlands: Housing and Food Program - FSA of Redlands | $9,340 | Kyra Stewart, Executive Director<br>612 Lawton Street<br>Redlands, CA 92374<br>kyra@redlandsfamilyservice.org<br>9097932673 |
| REDL-25-1-05W/0283 | Redlands: Boys and Girls Club - Family Strengthening Program | $9,340 | Michael Wells, Chief Executive Director<br>Boys & Girls Club of Greater Redlands - Riverside<br>1251 Clay St.<br>Redlands, CA, 92374<br>grants@bgcie.org<br>909-798-4599 |
| REDL-25-1-05Z/0332 | Redlands: Girls on the Run | $9,340 | Molly Widdicombe, Council Director<br>Girls on the Run Inland Empire<br>P.O. Box 21044<br>Riverside, CA 92516<br>mollywiddicombe@girlson the run.org<br>(951) 394-3141 |

**COUNTY OF SAN BERNARDINO**
**Community Development and Housing Department**

Attachment "B"

**2025-2026 Community Development Block Grant (CDBG) Program**
**Cooperating City Recommended Projects Form**

**City (1):** City of Redlands

**City Council Hearing Date (2):** Tuesday, December 17, 2024

**City's 2025-2026 Allocation (3):** $ 311,347

**Public Service Limit (15%) (4):** $ 46,702

**Available Unprogrammed Funds From Prior Years (5):** $739.16

| CDH Application Log # (6) | Project Title (* indicates project requires a "General Fund Guarantee") (7) | Public Service *Y/N* (8) | Applicant's Requested Amount (9) | City's 2025-2026 Recommended Allocation Amount (10) | Available Unprogrammed Funds to Commit to Activity (11) | Public Service Amount (12) | Activity Total (13) |
|---|---|---|---|---|---|---|---|
| REDL25CN-016 | Sylvan Park Restroom Replacement & ADA Improvements | N | $ 350,000 | $ 264,647.00 | $ 739.16 | $ - | $ 265,386.16 |
| REDL25PS-018 | Family Service Association of Redlands - Housing & Food Assistance | Y | $ 15,000 | $ 9,340 | $ - | $ 9,340 | $ 9,340.00 |
| REDL25PS-023 | Boys and Girls Club - Family Strengthening | Y | $ 10,000 | $ 9,340 | $ - | $ 9,340 | $ 9,340.00 |
| REDL25PS-033 | Girls on the Run - Youth Services | Y | $ 10,000 | $ 9,340 | $ - | $ 9,340 | $ 9,340.00 |
| REDL25PS-039 | Partners Against Violence Victims of Violence Supportive Services | Y | $ 38,370 | $ 9,340 | $ - | $ 9,340 | $ 9,340.00 |
| REDL25PS-053 | YMCA of the East Valley - Legal Serivces | Y | $ 10,000 | $ 9,340 | $ - | $ 9,340 | $ 9,340.00 |
| | | | $ - | $ - | $ - | $ - | $ - |
| | | | $ - | $ - | $ - | $ - | $ - |
| | | | $ - | $ - | $ - | $ - | $ - |
| | | | $ - | $ - | $ - | $ - | $ - |
| | | | $ - | $ - | $ - | $ - | $ - |
| | | **Totals (14)** | **$ 433,370** | **$ 311,347.00** | **$ 739.16** | **$ 46,700.00** | **$ 312,086.16** |

**Public Service Calculation (15):**

**Public Service Limit:** $ 46,702

**Less Total Public Service Activity Amount:** $ 46,700.00

**Amount Available to Program to Public Service Activities:** $ 2

**Remaining Balance of Unprogrammed Funds (16):** $ -

**Authorized City Representative (17):**

Signature: Tricia Munoz, Management Analyst

Date (18): 12/17/2024

**General Fund Guarantee Certification (19)**

For Third-Party capital improvement activities, the City understands that reimbursements received from the County for which no measurable outcome is achieved may subsequently be required to be repaid by the City (using non-federal funds) to County. Measurable outcomes are defined as providing benefits to low- to moderate-income individuals, families, organizations, and communities and are derived from the project or program.

☐ YES *The City agrees to enter into a "General Fund Guarantee" in order for the County to recommend activity funding.*

**City Council/Financing Authority Meeting** **K. 3.**

**DATE:** 09/16/2025

**TO:** Honorable Mayor and City Council Members

**SUBJECT:** Consideration of a Sole Source Procurement and Memorandum of Understanding (MOU) between the City of Redlands and the Apple Valley Fire Protection District for outfitting services of Fire Department light fleet emergency vehicles for a not-to-exceed amount of $500,000 over the initial and extended terms (Fire Chief Sessler)

---

**MOTION(S):**

If the City Council determines that staff's recommendation is appropriate, the following motion is provided:

I move that the City Council approve a Sole Source Procurement via Memorandum of Understanding (MOU) Between the City of Redlands and the Apple Valley Fire Protection District for Outfitting Services of Fire Department light fleet emergency vehicles for a not-to-exceed amount of $500,000 over the Initial and Extended Terms.

**RECOMMENDATION:**

Staff recommends City Council's approval of a Sole Source Procurement via Memorandum of Understanding (MOU) Between the City of Redlands and the Apple Valley Fire Protection District for Outfitting Services of Fire Department light fleet emergency vehicles for a not-to-exceed amount of $500,000 over the Initial and Extended Terms to expedite the installation of essential emergency equipment, addressing delays experienced with other vendors. By utilizing Apple Valley Fire Protection District's fleet service resources, the City can ensure a quicker, more efficient deployment of fully equipped emergency vehicles, enhancing operational readiness.

**DISCUSSION:**

The Redlands Fire Department operates a fleet of light emergency vehicles used by Chief Officers, including Battalion Chiefs, for incident command and emergency response. When these vehicles are acquired, they must be outfitted with specialized equipment, such as emergency lights, sirens, and radios, to ensure they are fully prepared for immediate deployment in emergency situations.

The Apple Valley Fire Protection District has a dedicated fire emergency vehicle and apparatus mechanic to meet these outfitting and maintenance needs. Their familiarity with the unique requirements of fire emergency vehicles, combined with their proven ability to provide quicker turnaround times than private vendors previously used by the City, establishes them as the most qualified provider of these services.

Staff has also reviewed Apple Valley Fire Protection District's pricing for outfitting services and determined the rates to be fair and reasonable when compared to industry standards and the City's past experience with private vendors. Accordingly, staff is recommending the approval of Apple Valley Fire Protection District as a sole source provider for vehicle outfitting services.

This Memorandum of Understanding (MOU) establishes a one-year Initial Term with the option of four additional one-year extensions, for a total possible term of five years, between the City of Redlands and Apple Valley Fire Protection District for the outfitting of the Fire Department's light fleet vehicles. Through this agreement, the City will gain access to specialized services that streamline the outfitting process, reduce costs, and improve turnaround times—especially when compared to private vendors currently experiencing delays.

By leveraging Apple Valley's expertise, the City of Redlands can ensure its Fire Chief Officers' vehicles are equipped and deployed more efficiently, thereby enhancing emergency response readiness in a cost-effective and reliable manner.

**ALTERNATIVES:**

The City Council may choose not to approve the Memorandum of Understanding for Light Fleet Vehicle Outfitting Services and provide staff with alternate direction.

**STRATEGIC PLAN:**

Priority B- Public Health

**SUBMITTED BY:**
Rich A. Sessler, Fire Chief

**RECOMMENDED BY:**
Charles M. Duggan Jr., City Manager

**REVIEWED BY:**
Yvette M. Abich Garcia, City Attorney
Janice McConnell, Assistant City Manager
Danielle Garcia, Management Services/Finance Director
Dana Abramovitz-Daniel, Procurement Manager

**PREPARED BY:**
Bruni Reyes, Management Analyst

---

## Fiscal Impact

**Fiscal Year:** FY 2025-26

**Discussion:**

The total not-to-exceed amount for the Initial Term of the agreement is $250,000 over 1 year. The value of the remaining four one-year Extended Terms is $250,000 combined. Actual spending will vary based on the specific outfitting services required for each vehicle. The Fire Department has allocated funds through the mid-biennium budget process to cover expenses for the initial term. Any additional funding, if needed, will be requested in the upcoming Biennial Budget on an as-needed basis. All costs will be paid directly to the Apple Valley Fire Protection District in accordance with City purchasing guidelines.

---

## Attachments

Sole Source Form

MOU

---

# Sole Source/ Single Source/ Standardization Form

**For procurement of supplies, equipment and services valued at $5,000 and over**

**NOTE: Every question must be answered with appropriate documentation attached; incomplete forms will be immediately rejected by Purchasing.**

**Date:** 8/25/20

**To:** Purchasing Division

**From:** Bruni Reyes, Management Analyst

**Estimated Total Cost: $** 250,000

**Proposed Vendor:** Apple Valley Fire Protectio

**Request Term:** _____

This form must accompany the purchase document whenever an exception to the competitive process is requested. Requests for goods and/or services from a specific vendor or limited to a specific brand, where substitutes to the recommended vendor or brand are unacceptable, must be accompanied by a written justification explaining the circumstances that make alternatives unacceptable.

The City Manager will determine whether the justification is appropriate. Requests for exception must be supported by factual statements that will pass an audit.

## INSTRUCTIONS

1. Please check all applicable categories (a. through i.) below and provide additional information where indicated.

☐ a. The requested product is an integral repair part or accessory compatible with existing equipment.

Existing Equipment: _____

Manufacturer/Model Number: _____

Age: _____

Current Estimated Value: _____

☐ b. The requested product has unique design/performance specifications or quality requirements that are not available in comparable products.

☐ c. I have standardized the requested product and the use of another brand/model would require considerable time and funding to evaluate.

☐ d. The requested product is one in which I (and/or my staff) have specialized training and/or extensive expertise. Retraining would incur substantial cost in time and/or funding.

☐ e. The requested product is used or demonstration equipment available at a lower-than-new cost.

☐ f. Repair/Maintenance service is available only from manufacturer or designated service representative.

☐ g. Upgrade to or enhancement of existing software is available only from manufacturer.

☐ h. Service proposed by vendor is unique; therefore, competitive bids are not available or applicable.

☒ i. Other factors (provide detailed explanation in #2 below).

2. Provide a detailed explanation and pertinent documentation *for each category* checked in item 1 above. Attach additional sheets if necessary:

Please see attachment

3. Was an evaluation of other equipment, products, or services performed?

☐ Yes ☒ No

***If yes, please explain the type of evaluation performed and provide all supporting documentation:***

4. List below the name of each individual who was involved in the evaluation, if conducted, and in making the recommendation to procure this product or service. Attach additional information, if necessary.

5. **Explain what action(s) the department would take if the sole/single source services were no longer available**

The Fire Department would have to continue to use the current vendor which has resulted in delayed and inaccurate service, which can have significant impacts on emergency responses.

6. I certify that the above information is accurate to the best of my knowledge, and a signed copy of this document will be kept on file and available for audit in my department

Bruni Reyes 8/25/2025

Prepared by Date

8-25-25

Department Director Date

## Purchasing Approvals

Purchasing Agent Approval Date

City Manager Approval Date

The Apple Valley Fire Protection District is uniquely qualified as a sole source provider for light fleet vehicle outfitting services due to its specialized expertise in emergency vehicle configuration, direct familiarity with fire service operational requirements, and established capacity to perform this work in compliance with fire safety standards. The District possesses the necessary equipment, trained personnel, and proven experience outfitting fire fleet vehicles to meet operational readiness and safety specifications. Additionally, using the previous vendor resulted in delayed turnaround times that negatively impacted operational readiness. By utilizing the Apple Valley Fire Protection District, the Fire Department is assured consistent, reliable, and timely service, ensuring fleet standardization, reducing downtime, and maintaining continuity of operations.

# MEMORANDUM OF UNDERSTANDING BETWEEN THE CITY OF REDLANDS AND THE APPLE VALLEY FIRE PROTECTION DISTRICT FOR LIGHT FLEET OUTFITTING SERVICES

This Memorandum of Understanding ("MOU") for Light Fleet Outfitting Services is dated this 16th day of September, 2025 ("Effective Date") and is entered into by and between the Apple Valley Fire Protection District (the "District") a fire protection district duly authorized and existing pursuant to California Health & Safety Code Section 13800, et seq., and the City of Redlands (the "City"), a municipal corporation and general law city. The District and the City may be referred to herein individually as a "Party" and, together as the "Parties."

## RECITALS

WHEREAS, the City of Redlands Fire Department operates certain light fleet emergency vehicles used by Chief Officers for emergency response and incident command; and

WHEREAS, the City light fleet vehicles, once purchased, require the installation of emergency lighting, sirens, and radios; and

WHEREAS, the District has a dedicated fire emergency vehicle and apparatus fleet mechanic to address the outfitting and maintenance needs of their emergency vehicles; and

WHEREAS, the District is willing to provide the outfitting services to other fire agencies with the intent to promote the efficient use of public resources; and

WHEREAS, by entering into this MOU, the City will gain access to the District's specialized resources and services, ensuring that Chief Officer vehicles maintain operational readiness; and

WHEREAS, District and City execute this MOU for the purpose of formalizing the terms and conditions governing the provision of light fleet vehicle outfitting services.

NOW, THEREFORE, in consideration of the above recitals and the mutual covenants hereinafter contained, and for other good and valuable consideration, the receipt of which is hereby acknowledged, the Parties agree as follows:

## AGREEMENT

Section 1. Incorporation of Recitals. The above recitals are true and correct and are hereby incorporated into this MOU by this reference.

Section 2. Term. The term of this MOU shall be for a period of one (1) year from the Effective Date set forth above (the "Initial Term"). The City shall have the option to extend the Initial Term of the MOU by four (4) additional one-year terms ("Extended Terms"), on the same terms and conditions, by providing written notice to the District at lest thirty (30) days prior to the expiration of the Initial Term.

Section 3. Compensation. The compensation for the District's Services shall not exceed the amount of Two Hundred Fifty Thousand Dollars ($250,000) for the Services provided during the Initial Term. Should this Agreement be extended, the compensation for the District's performance for the Services shall be allocated across the four possible Extended Terms, bringing the total possible amount of compensation to a not-to-exceed amount of Five Hundred Thousand Dollars ($500,000). All payments shall be made on a time and materials basis for Services performed, subject to the limits stated herein.

Section 4. Authority. Unless otherwise specified herein, all authority to act on behalf of the City pursuant to this MOU shall be exercised by Fire Chief Rich Sessler, or his designee. Unless otherwise specified herein, all authority to act on behalf of the District pursuant to this MOU shall be exercised by Fire Chief Buddy Peratt or his designee.

Section 5. Outfitting Services

A. Under this MOU, District will provide Light Fleet Outfitting Services for the City's light fleet emergency vehicles, which are primarily utilized by Chief Officers, including Battalion Chiefs, for emergency response and incident command. These services will ensure that the vehicles are fully equipped to meet the operational demands of emergency situations. The District's outfitting services will include the installation of essential emergency equipment such as lighting, sirens, and radios, ensuring that vehicles are highly visible and capable of effective communication in the field. Additionally, the District will mount specialized equipment required for emergency response operations, tailoring each vehicle to meet the specific needs of the Redlands Fire Department. The Services also include the integration of advanced communication and technology systems, enhancing situational awareness and coordination during incidents. Furthermore, vehicles will be customized to align with the operational requirements of the Redlands Fire Department, ensuring efficiency and readiness. Any additional outfitting requests or modifications beyond the scope described above may be incorporated as mutually agreed upon by both parties, allowing for flexibility to meet the evolving needs of the Redlands Fire Department.

Section 6. City Responsibilities. The City shall be solely responsible for all of the following, including, without limitation, any accompanying cost or expense:

A. Provide vehicles to the District for outfitting services in accordance with a mutually agreed-upon schedule.

B. Specify the required outfitting configurations, including equipment layout and operational functionality.

C. Coordinate with the District regarding the procurement of any necessary outfitting equipment not supplied by City. Such equipment may be obtained by the District upon mutual agreement by both parties, including prior written approval of associated costs.

D. Review and approve completed work before acceptance.

E. Ensure timely payment for services rendered as outlined in this MOU.

Section 7. District Responsibilities. The District shall be solely responsible for all of the following, including, without limitation, any accompanying cost or expense:

A. Provide the necessary personnel, including a fire vehicle/apparatus fleet mechanic, to perform the outfitting services.

B. Ensure all installations meet applicable safety standards and industry best practices.

C. Perform outfitting services within a reasonable timeframe as agreed upon by both parties.

D. Provide documentation of work completed, including an itemized invoice or a detailed breakdown of services rendered.

E. Invoice the City in accordance with the agreed-upon payment terms.

F. Storing Equipment overnight at secure facilities owned and controlled by the District when the District is in possession and control of the light fleet vehicles.

Section 8. Indemnification. To the fullest extent permitted by law, the District (the "Indemnifying Party") shall defend, indemnify, and hold harmless the City (the "Indemnified Party"), including its elected and appointed officials, officers, employees, agents, and volunteers, from and against any and all claims, demands, causes of action, costs, expenses, liabilities, losses, damages, or injuries, including, but not limited to, reasonable attorneys' fees and legal costs, arising out of or related to the performance of Light Fleet Outfitting Services pursuant to this MOU. This includes, without limitation, claims relating to property theft, damage or destruction, personal injury, or wrongful death, in any way connected to the custody, delivery, modification, installation, or servicing of fleet equipment by the Indemnifying Party or its employees, agents, or contractors, except to the extent such claims result solely from the willful misconduct of the Indemnified Party.

The Indemnifying Party shall, at its own cost and expense, defend any and all such claims, suits, or legal proceedings brought against the Indemnified Party, using legal counsel reasonably acceptable to the Indemnified Party. The Indemnifying Party shall be responsible for any resulting judgments, awards, or settlements, and shall reimburse the Indemnified Party for any and all legal expenses incurred in connection with such matters or in enforcing this indemnity provision.

Section 9. This indemnification is not limited by the availability or scope of insurance coverage and shall survive the termination or expiration of this MOU.

Section 10. Insurance.

A. Time for Compliance. District shall not begin performing any Light Fleet Outfitting Services under this MOU unless and until it has provided evidence satisfactory to the City that it has obtained all insurance coverage required under this section, or that it is self-insured in a manner acceptable to the City.

B. Minimum Requirements. The District shall, at its expense, procure and maintain for the duration of this MOU insurance against all claims for injuries to persons or damages to property which may arise from or in connection with the performance of this MOU by the District, its elected and appointed officials, officers, employees, and volunteers. Such insurance shall meet at least the following minimum levels of coverage, or the District shall be self-insured to the satisfaction of the City:

i. Minimum Limits of Insurance. District shall maintain limits no less than: (1) General Liability: $2,000,000 per occurrence for bodily injury, personal injury and property damage. If Commercial General Liability Insurance or other form with a general aggregate limit is used, either the general aggregate limit shall apply separately to this MOU or the general aggregate limit shall be twice the required occurrence limit. The policy must include contractual liability that has not been amended. Any endorsement restricting standard ISO "insured contract" language will not be accepted; (2) Automobile Liability: $1,000,000 per accident for bodily injury and property damage; and (3) Workers' Compensation and Employer's Liability: Workers' Compensation limits as required by the Labor Code of the State of California. Employer's Liability limits of $1,000,000 per accident for bodily injury or disease.

ii. Endorsements. Each policy shall be endorsed to state that: (1) the City and its directors, officials, officers, employees, and volunteers shall be covered as additional insured with respect to the use, operation or transport the Equipment performed by or on behalf of the District; and (2) the insurance coverage shall be primary insurance as respects the City and its directors, officials, officers, employees, and volunteers, or if excess, shall stand in an unbroken chain of coverage excess of City' scheduled underlying coverage. Any insurance or self-insurance maintained by the City and its directors, officials, officers, employees, and volunteers shall be excess of such insurance obtained by the District and shall not be called upon to contribute in any way. The insurer shall agree to waive all rights of subrogation against the City and its directors, officials, officers, employees, and volunteers for losses paid under the terms of the insurance policy which arise from the performance of Light Fleet Vehicle Outfitting Services by the District. Each insurance policy shall also be endorsed to state that: (1) coverage shall not be suspended, voided, reduced or canceled except after thirty (30) days prior written notice by certified mail, return receipt requested, has been given to the City as applicable; and (2) any failure to comply with reporting or other provisions of the policies, including breaches of warranties, shall not affect

coverage provided to the City and its directors, officials, officers, employees and volunteers. There shall be no cross-liability exclusion for claims or suits by one insured against another. Requirements of specific coverage features, or limits contained in this section are not intended as a limitation on coverage, limits or other requirements, or a waiver of any coverage normally provided by any insurance.

Section 11. Termination. This MOU shall commence on the Effective Date set forth above, and shall remain in effect for a period of five (5) years, unless terminated earlier by either Party as outlined below.

i. Either party may terminate this MOU with thirty (30) days' written notice to the other party.

ii. In the event of termination, the City shall compensate he District for any services completed prior to the termination.

iii. This MOU may be renewed or amended upon mutual agreement by both parties in writing.

Section 12. Notices. Any notice or other communication required, or which may be given, pursuant to this Agreement, shall be in writing. Any such notice shall be deemed delivered (i) on the date of delivery in person; (ii) five (5) days after deposit in first class registered mail, with return receipt requested; (iii) on the actual delivery date if deposited with an overnight courier; or (iv) on the date sent by facsimile or electronic mail transmission (including PDF), if confirmed with a copy sent contemporaneously by first class, certified, registered or express mail; in each case properly posted and fully prepaid to the appropriate address set forth below, or such other address as a Party may provide notice in accordance with this section:

If to the City: Redlands Fire Department
35 Cajon Street, Suite 12, Redlands CA 92373
Attn: Fire Chief Rich Sessler

If to District: Apple Valley Fire Protection District
22400 Headquarters Drive, Apple Valley, CA 92307
Attn: Fire Chief Peratt

Section 13. Miscellaneous Terms.

A. Representation and Warranties. City and the District have all requisite power and authority to execute and perform this MOU. Each person executing this MOU warrants that he or she has the legal power, right, and authority to execute this MOU and bind his or her respective Party.

B. Governing Law. This MOU shall be governed by and construed in accordance with the laws of the State of California. Venue shall be in San Bernardino County.

C. Relationship of the Parties. Nothing contained in this MOU shall be construed as creating a joint venture, partnership, or any other similar arrangement between the Parties. No Party to this MOU shall be deemed to be a representative, an agent, or an employee of the other Party. Unless otherwise expressly specified in this MOU, no Party shall have any authority or right to assume or create any obligation of any kind or nature, express or implied, on behalf of, or in the name of, any other Party, nor bind any other Party in any respect, without the specific prior written authorization of the other Party.

D. Waiver. No Party shall be deemed to have waived any provision of this MOU unless such waiver is in writing and signed by such Party.

E. Legal Compliance. The Parties shall comply with all applicable Federal, State, and local laws and regulations related to the transactions set forth in, or referenced by, this MOU.

F. Third-Party Beneficiary. No claim as a third-party beneficiary under this MOU by any person, corporation, or any other entity, shall be made or be valid against the District or the City.

G. Headings. The section headings used in this MOU are for convenience only and shall not be deemed to limit, construe, affect or alter the meaning of this MOU.

H. Entire Agreement. This MOU constitutes the entire agreement between the Parties with respect to the matters contained herein, and shall supersede and replace any and all other prior understandings, correspondence, and agreements, oral or written, between the Parties with respect thereto. No change, amendment or modification of this MOU shall be valid or binding upon the Parties unless such change, amendment, or modification is in writing and duly executed by all Parties.

I. Assignment or Transfer. The City shall not assign, hypothecate, or transfer, either directly or by operation of law, this MOU or any interest herein without the prior written consent of the District. Any attempt to do so shall be null and void, and any assignees, hypothecates, or transferees shall acquire no right or interest by reason of such attempted assignment, hypothecation, or transfer.

J. Binding Effect. The terms of this MOU shall inure to the benefit of, and shall be binding upon, each of the Parties and their respective successors and assigns.

K. Severability. In the event that any one or more of the phrases, sentences, clauses, paragraphs, or sections contained in this MOU shall be declared invalid or unenforceable by a valid judgment or decree of a court of competent jurisdiction, such invalidity or unenforceability shall not affect any of the remaining phrases, sentences, clauses, paragraphs, or sections of this MOU which are hereby declared as severable, and shall be interpreted to carry out the intent of the Parties hereunder.

L. Cooperation: Further Acts. The Parties shall reasonably cooperate with one another and shall take any additional acts or sign any additional documents as may be necessary, appropriate, or convenient to attain the purposes of this MOU.

M. Counterparts. This MOU may be signed in counterparts, each of which shall constitute an original.

IN WITNESS WHEREOF, the Parties have executed this MOU for Light Fleet Emergency Vehicle Outfitting Services as of September 2, 2025.

| Apple Valley Fire Protection District | City of Redlands |
| --- | --- |
| By: _____<br>Buddy Peratt, Fire Chief | By: _____<br>Mario Saucedo, Mayor |
| Date: _____ | Date: _____ |
| | ATTEST: |
| | By: _____<br>Jeanne Donaldson, City Clerk |

**City Council/Financing Authority Meeting** **K. 4.**

**DATE:** 09/16/2025

**TO:** Honorable Mayor and City Council Members

**SUBJECT:** Consideration of a Resolution of Intention to approve an amendment to the contract between the Board of Administration of the California Public Employees' Retirement System and the City Council of the City of Redlands (Human Resources/Risk Management Director Meteau)

---

**MOTION(S):**

If the City Council determines that staff's recommendation is appropriate, the following motion is provided:

I move the City Council adopt a Resolution of Intention to approve an amendment to the contract between the Board of Administration of the California Public Employees' Retirement System and the City Council of the City of Redlands to remove the hourly exclusion language from the contract.

**RECOMMENDATION:**

Staff recommends that the City Council adopt a Resolution of Intention to approve an amendment to the contract between the Board of Administration of the California Public Employees' Retirement System and the City Council of the City of Redlands to remove the hourly exclusion language from the contract.

**DISCUSSION:**

The City is required to adopt a Resolution of Intention as the initial step in the formal amendment process. The proposed amendment seeks to remove the current language excluding hourly employees from CalPERS membership, which is currently embedded in the contract between the City and the CalPERS Board of Administration.

Adoption of the Resolution of Intention initiates the amendment process. The next step is for the City to introduce and adopt an Ordinance authorizing the amendment to the contract, which then allows CalPERS to proceed with the preparation of the final amendment documents for consideration at a future City Council meeting.

Staff proposes adopting the Resolution to remove the exclusion of all hourly employees and utilize exclusion criteria under Government Code Section 20305. This provision allows a public agency to exclude employees based on specific service thresholds, provided those employees do not have prior CalPERS membership. It is CalPERS' recommendation to remove the exclusion and utilize Government Code section 20305.

Under Government Code Section 20305, CalPERS membership would be triggered once an employee completes either:

- 125 days of service if employed on a per diem basis, or
- 1,000 hours of service if employed on a basis other than per diem, within a single fiscal year.

This change aligns the City with standard CalPERS eligibility rules and provides a consistent framework for determining membership eligibility for hourly employees.

**ALTERNATIVES:**

The City Council may choose to take no action. However, this would result in no changes to the City's contract with CalPERS and would not consider the recommendation provided directly by CalPERS.

**STRATEGIC PLAN:**

Not applicable.

**SUBMITTED BY:**
Robert Meteau, Human Resources/Risk Management Director

**RECOMMENDED BY:**
Charles M. Duggan Jr., City Manager

**REVIEWED BY:**
Yvette M. Abich Garcia, City Attorney
Janice McConnell, Assistant City Manager
Danielle Garcia, Management Services/Finance Director

**PREPARED BY:**
Kisha McDonald, Human Resources Manager

---

## Fiscal Impact

**Discussion:**

There is no fiscal impact associated with the contract amendment.

---

## Attachments

Resolution of Intention
Certification of Governing Body

---

**RESOLUTION OF INTENTION**

**TO APPROVE AN AMENDMENT TO CONTRACT**

**BETWEEN THE**

**BOARD OF ADMINISTRATION**
**CALIFORNIA PUBLIC EMPLOYEES' RETIREMENT SYSTEM**

**AND THE**

**CITY COUNCIL**
**CITY OF REDLANDS**

WHEREAS, the Public Employees' Retirement Law permits the participation of public agencies and their employees in the Public Employees' Retirement System by the execution of a contract, and sets forth the procedure by which said public agencies may elect to subject themselves and their employees to amendments to said Law; and

WHEREAS, one of the steps in the procedures to amend this contract is the adoption by the governing body of the public agency of a resolution giving notice of its intention to approve an amendment to said contract, which resolution shall contain a summary of the change proposed in said contract; and

WHEREAS, the following is a statement of the proposed change:

> To provide Section 20503 (Removal of the Contract Exclusions of "Persons Compensated On An Hourly Basis Hired On Or After January 1, 1969," prospectively from the effective date of this amendment to contract).

NOW, THEREFORE, BE IT RESOLVED that the governing body of the above agency does hereby give notice of intention to approve an amendment to the contract between said public agency and the Board of Administration of the Public Employees' Retirement System, a copy of said amendment being attached hereto, as an "Exhibit" and by this reference made a part hereof.

By:_____
Presiding Officer

_____
Title

_____
Date adopted and approved

**California Public Employees' Retirement System**
Financial Office | Pension Contracts & Prefunding Programs Division
P.O. Box 942715, Sacramento, CA 94229-2715

**www.calpers.ca.gov**
**888 CalPERS** (or **888**-225-7377)
TTY: (877) 249-7442

# Certification of Governing Body's Action

I hereby certify that the foregoing is a true and correct copy of a Resolution adopted by the

_____ of the
(governing body)

_____
(public agency)

on _____.
(date)

_____
Clerk/Secretary

_____
Title

**City Council/Financing Authority Meeting** **K. 5.**

**DATE:** 09/16/2025

**TO:** Honorable Mayor and City Council Members

**SUBJECT:** Consideration of a Public Works Contract with All American Building Services for the 2025 Alley Paving Improvement Project for an amount not-to-exceed $465,000.15 and determination that the Project is categorically exempt from environmental review pursuant to Section 15301(c) of the State's Guidelines for Implementing the California Environmental Quality Act (Municipal Utilities and Engineering Director Harris)

---

**MOTION(S):**

If the City Council determines the staff recommendation is appropriate, the following motions are provided:

1. I move that the City Council determine approval of the contract and construction of the 2025 Alley Paving Improvement Project is categorically exempt from environmental review in accordance with Section 15301(c) of the State's Guidelines implementing the California Environmental Quality Act; and

2. I move that the City Council approve the 2025 Alley Paving Improvement Project plans and specifications, and award a Public Works Contract to All American Building Services for an amount not-to-exceed $465,000.15.

**RECOMMENDATION:**

Staff recommends that the City Council determine approval of a Public Works Contract and construction of the 2025 Alley Paving Improvement Project is categorically exempt from environmental review pursuant to Section 15301(c) of the State's guidelines implementing the California Environmental Quality Act. Staff further recommends City Council approve the 2025 Alley Paving Improvement Project plans and specifications, and award a Public Works Contract to All American Building Services for an amount not-to-exceed $465,000.15.

**DISCUSSION:**

The 2025 Alley Paving Improvement Project (Project) will resurface four (4) alleys identified on the attached location map (Attachment D). The Project also removes and replaces driveways and sidewalks where necessary, protects and/or replaces existing utilities, trees, power poles, public and private improvements, survey monuments, constructs drainage facilities, and restores all areas and improvements to pre-construction conditions.

City Staff recently prepared the plans and specifications and advertised the Project for construction. On July 17, 2025, the City Clerk's office received and opened the following eleven (11) bids for the Project:

| BID OPENING REPORT SUMMARY | |
|---|---|
| **Bidder** | **Bid Amount** |
| 1. All American Building Services, Santa Clarita, CA | $465,000.15* |
| 2. LCR Earthwork & Engineering Corp, Jurupa Valley, CA | $570,478.00 |
| 3. Tryco General Engineering, Rimforest, CA | $586,445.00 |
| 4. Onyx Paving Company Inc., Rancho Mission Viejo, CA | $678,000.00 |
| 5. Mariani Builders, Inc., Rancho Mission Viejo, CA | $689,614.00 |
| 6. Leonida Builders, Inc., Acton, CA | $698,885.00 |
| 7. Tyner Paving Company, Alhambra, CA | $762,469.00 |
| 8. Hardy & Hamer, Inc., Lake Forest, CA | $808,185.00 |
| 9. We R Builders, Inc., Glendale, CA | $818,490.50 |
| 10. J & A Engineering, Azusa, CA | $983,541.00 |
| 11. All American Asphalt, Corona, CA | $1,035,239.70 |

*An arithmetic error was made in the bid proposal. The total bid amount was corrected and highlighted in the attached Bid Analysis to identify arithmetic errors, but it did not affect ranking.

Bids were reviewed by staff, and All American Building Services was determined to be the lowest responsive and responsible bidder. Funding for the project is available in the FY 25/26 MUED budget. If approved, it is anticipated that the Project will be completed within forty-five (45) working days after issuance of the Notice to Proceed.

This project is categorically exempt from environmental review in accordance with Section 15301(c) of the State's guidelines implementing the California Environmental Quality Act, as the Project involves paving existing alleys within the right-of-way with no increase to existing use.

**ALTERNATIVES:**

City Council may deny the staff recommendation and provide alternate direction.

**STRATEGIC PLAN:**

The project supports Strategic Plan Priority D, Strategic Objective 3. Infrastructure: Engineer and construct transportation facilities to accommodate all potential users - motorists, cyclists, and pedestrians.

**SUBMITTED BY:**
John R. Harris, Municipal Utilities and Engineering Director

**RECOMMENDED BY:**
Charles M. Duggan Jr., City Manager

**REVIEWED BY:**
Yvette M. Abich Garcia, City Attorney
Janice McConnell, Assistant City Manager
Danielle Garcia, Management Services/Finance Director
Goutam K. Dobey, City Engineer

**PREPARED BY:**
Johana Silva, Associate Engineer

---

**Fiscal Impact**

| | |
|---|---|
| **Fiscal Year:** | FY 25/26 |
| **Appropriation Required Y/N:** | No |
| **Budgeted Y/N:** | Yes |
| **Account No.:** | 211910 |

**Discussion:**

There is no fiscal impact associated with this action. The cost for this project is included in the FY 25/26 MUED budget.

**Attachments**

A. All American Building Public Works Contract
B. Bid Opening Report
C. Bid Analysis
D. Location Map
E. 2025 Alley Project Plans
F. 2025 Alley Specifications

# PUBLIC WORK CONSTRUCTION CONTRACT

This Public Work Construction contract ("Contract") is made and entered into this 16th day of September, 2025, by and between the City of Redlands, a municipal corporation, organized and existing under the laws of the State of California (hereinafter "City"), and All American Building Services (hereinafter "Contractor"). City and Contractor are sometimes individually referred to herein as a "Party" and, together, as the "Parties."

In consideration of the mutual promises contained herein, City and Contractor agree as follows:

1. **SCOPE OF WORK:** Contractor shall furnish all materials and will perform all of the work for the following: 2025 Alley Paving Improvement Project, complete all items as required by the Contract Documents (as herein defined) and Specifications for City's 2025 Alley Paving Improvement Project, Project No. 211014 (the "Work").

2. **CONTRACT SUM:** City shall pay Contractor the sum of Four Hundred Sixty-Five Thousand Dollars and Fifteen Cents ($465,000.15) as consideration for its performance of the Work in accordance with the terms and conditions set forth in the Contract Documents. Pursuant to Public Contract Code Section 22300, Contractor has the option to deposit securities with an escrow agent as a substitute for retention of earnings required to be withheld by City pursuant to an escrow agreement as set forth in Public Contract Code section 22300.

3. **TIME FOR COMPLETION:** The Work shall be completed within forty-five (45) working day(s) as defined in Section 1-2 of the Standard Specifications for Public Works Construction "Greenbook" from and after the date of City's issuance of a Notice to Proceed to Contractor.

4. **LIQUIDATED DAMAGES:** Contractor's failure to complete the Work within the time allowed will result in damages being sustained by City. Such damages are, and will continue to be, impracticable and extremely difficult to determine. Accordingly, Contractor shall pay to City, or have withheld from monies due to Contractor, the sum of five hundred dollars ($500) for each working day as defined in Section 1-2 of the Standard Specifications for Public Works Construction "Greenbook" in excess of the specified time for completion of the Work. Execution of this Contract shall constitute agreement by City and Contractor that five hundred dollars ($500) per day is the estimated damage to City caused by the failure of Contractor to complete the work within the allowed time. Such sum is liquidated damages and shall not be construed as a penalty, and may be deducted from payments due Contractor if such delay occurs.

5. **CONTRACT DOCUMENTS:** This Contract incorporates by reference the following: Notice Inviting Bids, Instructions to Bidders, Contractor's Proposal, Bid Bond, Agreement, Performance Bond, Labor and Material Bond, Plans, General Conditions, Special Provisions and Specifications, and any addenda thereto (collectively, the "Contract Documents").

6. **ATTORNEYS' FEES:** In the event any action is commenced to enforce or interpret the terms or conditions of this Contract, or the Contract Documents, the prevailing Party in such action, in addition to any costs and other relief, shall be entitled to recover its reasonable attorneys' fees, including fees for use of in-house counsel by a Party.

7. **RESOLUTION OF CONSTRUCTION CLAIMS:** Claims by Contractor in the amount of three hundred seventy five thousand dollars ($375,000) or less shall be made by Contractor and processed by the City pursuant to the provisions of Part 3, Chapter 1, Article 1.5 of the Public

Contract Code (commencing with Section 20104). All claims shall be in writing and include the documents necessary to substantiate the claim. Nothing in subdivision (a) of Public Contract Code Section 20104.2 shall extend the time limit or supersede the notice requirements provided in this case from filing claims by Contractor.

8. **ELIGIBILITY OF CONTRACTOR/SUBCONTRACTOR:** Contractor and all of its subcontractors shall abide by California Public Contract Code, Section 6109, and California Labor Code Sections 1777.1 and/or 1777.7, and certify that they are not debarred and are eligible to work on this project.

9. **ASSIGNMENT OF AGREEMENT:** No assignment by a Party of any rights or interests under this Contract shall be binding on another Party without the written consent of the Party sought to be bound.

10. **SUCCESSORS AND ASSIGNS:** City and Contractor each binds itself and their respective successors and assigns in respect to all covenants, agreements, and obligations contained in the Contract Documents.

11. **SEVERABILITY:** Any provision or part of the Contract Documents held to be void or unenforceable under any law or regulation shall be deemed stricken, and all remaining provisions shall continue to be valid and binding upon City and Contractor.

**IN WITNESS WHEREOF,** the Parties hereto have executed this Contract the day and year first written above.

CITY OF REDLANDS

**(SEAL)**

By:_____
Mario Saucedo, Mayor

ATTEST:

_____
Jeanne Donaldson, City Clerk

**(SEAL)**

_All American Building Services _____
Name of Contractor

By:_____
Signature of Authorized Agent

_____
Title

_____
Signature of Authorized Agent (if necessary)

_____
Title

_____
Contractor's License No.

## WORKER'S COMPENSATION INSURANCE CERTIFICATION

Description of Contract: City of Redlands
Municipal Utilities and Engineering Department
2025 Alley Paving Improvement Project
Project No. 211014

Every employer, except the State, shall secure the payment of compensation in one or more of the following ways:

a. By being insured against liability to pay compensation by one or more insurers duly authorized to write compensation insurance in this State.
b. By securing from the Director of Industrial Relations, a certificate of consent to self-insure, either as an individual employer, or as one employer in a group of employers, which may be given upon furnishing proof satisfactory to the Director of Industrial Relations of ability to self-insure and to pay any compensation that may become due to his or her employees.

CHECK ONE

_____I am aware of the provisions of Section 3700 of the Labor Code which requires every employer to be insured against liability for Workers' Compensation or to undertake self-insurance in accordance with the provisions of that Code, and I will comply with such provisions before commencing the performance of the work and activities required or permitted under this Agreement. (Labor Code §1861).

_____I affirm that at all times, in performing the work and activities required or permitted under this Agreement, I shall not employ any person in any manner such that I become subject to the workers' compensation laws of California. However, at any time, if I employ any person such that I become subject to the workers' compensation laws of California, immediately I shall provide the City with a certificate of consent to self-insure, or a certification of workers' compensation insurance.

I certify under penalty of perjury under the laws of the State of California that the information and representations made in this certificate are true and correct.

Dated this _____ day of _____, 2025.

____All American Building Services_____
(Contractor)

_____
(Signature)

_____
(Official Title)

(SEAL)

(Labor Code Section 1861 provides that the above certificate must be signed and filed by the Contractor with the Owner prior to performing the work of the contract.)

## FAITHFUL PERFORMANCE BOND

Whereas, the City of Redlands ("City"), State of California, and All American Building Services (hereinafter designated as "Principal") have entered into an agreement dated September 16, 2025 ("Agreement") whereby Principal agrees to install and complete certain public improvements (the "Work"), which said Agreement is identified as 2025 Alley Paving Improvement Project, Project No. 211014 and is hereby referred to and made a part hereof; and

Whereas, said Principal is required under the terms of the Agreement to furnish a bond for the faithful performance of the Work, now, therefore, we, the Principal and, _____, as Surety, are held and firmly bound unto the City in the penal sum of Four Hundred Sixty-Five Thousand Dollars and Fifteen Cents ($465,000.15) lawful money of the United States, for the payment of which sum we bind ourselves, and our heirs, successors, executors and administrators, jointly and severally, firmly by these presents.

The condition of this obligation is such that if the above bounded Principal, his or its heirs, executors, administrators, successors or assigns, shall in all things stand to and abide by, and well and truly keep and perform the covenants, conditions and provisions in the Agreement and any alteration thereof made as therein provided, on his or its part, to be kept and performed at the time and in the manner therein specified, and in all respects according to their true intent and meaning, and shall faithfully fulfill the one-year guarantee of all materials and workmanship, and shall defend, indemnify and save harmless the City and its elected officials, officers, agents and employees, as therein stipulated, then this obligation shall become null and void; otherwise it shall be and remain in full force and effect.

As a part of the obligation secured hereby and in addition to the face amount specified therefor, there shall be included costs and reasonable expenses and fees, including reasonable attorneys' fees, incurred by the City in successfully enforcing such obligations, all to be taxed as costs and included in the judgment rendered.

As a condition precedent to the satisfactory completion of the Work, the above obligation shall hold good for a period of one (1) year or longer if required by the Agreement after the acceptance of the work by the City, during which time if the Principal shall fail to make full, complete, and satisfactory repair and replacements and totally protect the City from loss or damage made evident during this period from the date of completion of the Work, and resulting from or caused by defective materials or faulty workmanship, the above obligation in penal sum thereof shall remain in full force and effect. The obligations of Surety hereunder shall continue so long as any obligation of the Principal remains.

Whenever the Principal shall be, and is declared by the City to be, in default under the Agreement, the City having performed the City obligations thereunder, the Surety shall promptly remedy the default, or shall promptly, at the City's option:

1. Complete the Work in accordance with its terms and conditions; or

2. Obtain a bid or bids for completing the Work in accordance with its terms and conditions, and upon determination by Surety of the lowest responsive and responsible bidder, arrange for a contract between such bidder and the City, and make available as work progresses sufficient funds to pay the cost of completion of the Work less the balance of the Agreement price, but not exceeding, including other costs and damages for which Surety may be liable hereunder, the

amount set forth above. The term "balance of the Agreement price," as used in this paragraph, shall mean the total amount payable to the Principal by the City under the Agreement and any modifications thereto, less the amount previously properly paid by the City to the Principal.

Surety expressly agrees that the City may reject any contractor or subcontractor which may be proposed by Surety in fulfillment of its obligations in the event of default by the Principal.

Surety shall not utilize the Principal in completing the Work nor shall Surety accept a bid from the Principal for completion of the Work if the City, when declaring the Principal in default, notifies Surety of the City's objection to the Principal's further participation in the completion of the Work.

No right of action shall accrue on the bond to or for the use of any person or corporation other than the City named herein or the successors or assigns of the City. Any suit under this bond must be instituted within the applicable statute of limitations period.

The said Surety, for value received, hereby stipulates and agrees that no change, extension of time, alteration or addition to the terms of the Agreement or to the work to be performed thereunder or the Specifications accompanying the same shall in any way affect its obligations on this bond, and it does hereby waive notice of any such change, extension of time, alteration or addition to the terms of the Agreement or to the work or to the specifications.

No final settlement between the City and the Principal shall abridge the right of any beneficiary hereunder whose claim may be unsatisfied.

The Principal and Surety agree that if the City is required to engage the services of any attorney in connection with the enforcement of this bond, each shall pay the City's reasonable attorneys' fees incurred, with or without suit, in addition to the above sum.

In witness whereof, this instrument has been duly executed by the Principal and Surety above named, on _____, 2025.

(SEAL)

_____
(Contractor)

_____
(Signature)

(Seal and Notarial Acknowledgment of Surety)

(SEAL)

_____
(Surety)

BY: _____
(Signature)

Address:_____

_____

Telephone (  )_____

# LABOR AND MATERIAL BOND

Whereas, the City Council of the City of Redlands, State of California, and All American Building Services (hereinafter designated as "Principal") have entered into an agreement (the "Agreement") whereby Principal agrees to install and complete certain designated public improvements (the "Work"), which said agreement, dated September 16, 2025, and identified as 2025 Alley Paving Improvement Project, Project No. 211014 is hereby referred to and made a part hereof; and

Whereas, under the terms of the Agreement, Principal is required before commencing the performance of the Work, to file a good and sufficient Labor and Material bond with the City of Redlands to secure the claims to which reference is made in Title 3 (commencing with Section 9550) of Part 6 of Division 4 of the Civil Code of the State of California.

Now, therefore, said Principal and the undersigned as corporate surety, are held firmly bound unto the City and all contractors, subcontractors, laborers, material men and other persons employed in the performance of the Agreement and referred to in the aforesaid Code of Civil Procedure in the sum of four hundred sixty-five thousand dollars and 15 cents dollars ($465,000.15) for materials furnished or labor thereon of any kind, or for amounts due under the Unemployment Insurance Act with respect to such work or labor, that said surety will pay the same in an amount not exceeding the amount hereinabove set forth, and also in case suit is brought upon this bond, will pay, in addition to the face amount thereof, costs and reasonable expenses and fees, including reasonable attorneys' fees, incurred by the City in successfully enforcing such obligation, to be awarded and fixed by the court, and to be taxed as costs and to be included in the judgment therein rendered.

It is hereby expressly stipulated and agreed that this bond shall insure to the benefit of any and all persons, companies and corporations entitled to file claims under Title 3 (commencing with Section 9550) of Part 6 of Division 4 of the Civil Code, so as to give a right of action to them or their assigns in any suit brought upon this bond.

Should the condition of this bond be fully performed, then this obligation shall become null and void, otherwise it shall be and remain in full force and effect.

The surety hereby stipulates and agrees that no change, extension of time, alteration or addition to the terms of the Agreement or the specifications accompanying the same shall in any manner affect its obligations on this bond, and it does hereby waive notice of any such change, extension of time, alteration or addition.

In witness whereof, this instrument has been duly executed by the Principal and surety above named, on _____, 2025.

| | |
|---|---|
| (SEAL) | (SEAL) |
| _____ | _____ |
| (Contractor) | (Surety) |
| _____ | BY: _____ |
| (Signature) | (Signature) |
| (Seal and Notarial Acknowledgement of Surety) | Address:_____ |
| | _____ |
| | Telephone: (  )_____ |

**CITY OF REDLANDS**
**OFFICE OF THE CITY CLERK**
**BID OPENING REPORT**

The following bid was opened on the **17th day of July 2025 at 2:00 p.m.** on behalf of the Municipal Utilities and Engineering Department for **2025 Alley Paving Improvement Project. Project No. 211014.** The bid amounts have not been checked and are subject to correction after the bids have been completely reviewed.

| No. | Plan Holder's Name | Bid Certification Signed | Bid Bond Included | Total Bid Amount |
|---|---|---|---|---|
| 1 | All American Building Services, Santa Clarita, CA | Yes | Yes | $430,000.00 |
| 2 | LCR Earthwork & Engineering, Jurupa Valley, CA | Yes | Yes | $570,478.00 |
| 3 | Tryco General Engineering, Rimforest, CA | Yes | Yes | $586,445.00 |
| 4 | Onyx Paving Company Inc, Yorba Linda, CA | Yes | Yes | $678,000.00 |
| 5 | Marjani Builders, Inc., Rancho Mission Viejo, CA | Yes | Yes | $689,614.00 |
| 6 | Leonida Builders, Inc., Acton, CA | Yes | Yes | $698, 885.00 |
| 7 | Tyner Paving Company, Alhambra, CA | Yes | Yes | $762,469.00 |
| 8 | Hardy & Harper, Inc., Lake Forest, CA | Yes | Yes | $808,185.00 |
| 9 | We R Builders, Inc., Glendale, CA | Yes | Yes | $818,490.50 |
| 10 | J & A Engineering, Azusa, CA | Yes | Yes | $983,541.00 |
| 11 | All American Asphalt, Corona, CA | Yes | Yes | $1,035,239.70 |

Jeanne Donaldson, City Clerk
City of Redlands, California

Emailed: Councilmembers,
City Manager, PIO, Press
Department Head: John Harris
Staff: Johana Silva

ATTACHMENT "C"

**CITY OF REDLANDS**

**MUNICIPAL UTILITIES & ENGINEERING DEPARTMENT**

BID ANALYSIS

PROJECT NO. 211014 — BID DATE: 17-Jul-2024

2025 Alley Paving Improvement Project — EST. START DATE: 16-Sep-2024

| Item No. | Bid Item | Quantity | Unit | All American Building Services | | LCR Earthwork & Engineering, Corp | | Tryco General Engineering | |
|---|---|---|---|---|---|---|---|---|---|
| | | | | Unit Price | Item Price | Unit Price | Item Price | Unit Price | Item Price |
| 1 | Mobilization (Maximum 5% of total bid price) | 1 | LS | $20,630.00 | $20,630.00 | $24,000.00 | $24,000.00 | $20,000.00 | $20,000.00 |
| 2 | Erosion Control | 1 | LS | $3,200.00 | $3,200.00 | $6,000.00 | $6,000.00 | $2,800.00 | $2,800.00 |
| 3 | Survey (Construction Staking) | 1 | LS | $5,600.00 | $5,600.00 | $15,000.00 | $15,000.00 | $5,000.00 | $5,000.00 |
| 4 | Removal of all trash and debris, shrubs, bushes, tree stumps, existing pavement, concrete, vgutter, pavement grindings from right of way | 1 | LS | $22,520.00 | $22,520.00 | $160,000.00 | $160,000.00 | $20,000.00 | $20,000.00 |
| 5 | Construct 2.5" AC over 4" Aggregate Base, Compact Top 6" to 95% Compaction | 36,907 | SF | $5.20 | $191,916.40 | $4.00 | $147,628.00 | $8.00 | $295,256.00 |
| 6 | Construct 2' Wide V-Gutter | 2,527 | LF | $35.00 | $88,445.00 | $25.00 | $63,175.00 | $52.00 | $131,404.00 |
| 7 | Construct V-Gutter Transition | 8 | EA | $250.00 | $2,000.00 | $750.00 | $6,000.00 | $540.00 | $4,320.00 |
| 8 | Remove and Replace Driveway, 6" Thick PCC (560-C-3250), Compact Top 6" to 95% Compaction | 1,405 | SF | $32.75 | $46,013.75 | $25.00 | $35,125.00 | $29.00 | $40,745.00 |
| 9 | Remove and Replace Sidewalk, 6" Thick PCC (560-C-3250) | 570 | SF | $25.00 | $14,250.00 | $15.00 | $8,550.00 | $16.00 | $9,120.00 |
| 10 | Washington Street – Sawcut 12"x 50' AC, Gravel Backfill & Redwood Headers | 1 | LS | $10,425.00 | $10,425.00 | $5,000.00 | $5,000.00 | $4,800.00 | $4,800.00 |
| 11 | Demobilization | 1 | LS | $10,000.00 | $10,000.00 | $50,000.00 | $50,000.00 | $3,000.00 | $3,000.00 |
| 12 | Unforeseen Work Not Covered Within All Other Bid Items | 1 | LS | $50,000.00 | $50,000.00 | $50,000.00 | $50,000.00 | $50,000.00 | $50,000.00 |
| | Last Minute Additions/Deductions | | | | $0.00 | | $0.00 | | $0.00 |
| | | | **Total Bid Price** | | **$465,000.15** | | **$570,478.00** | | **$586,445.00** |

***Arithmetic error and incorrect amount entered for unforeseen bid item**

| | | | |
|---|---|---|---|
| License Status | Active | Active | Active |
| Sub's License Status | Active | Active | Active |
| Bid Bond Company | Ohio Casualty Insurance Company | Fidelity and Deposit Company | American Contractors Indemnity |
| Submitted Entire Bid Package | Yes | Yes | Yes |
| Submitted Sub's Qualification Statement | Yes | Yes | Yes |
| DIR Status | Active | Active | Active |
| Error in Bid | Yes | No | No |

ATTACHMENT "C"

**CITY OF REDLANDS**
**MUNICIPAL UTILITIES & ENGINEERING DEPARTMENT**
BID ANALYSIS

PROJECT NO. 211014 — BID DATE: 17-Jul-2024
2025 Alley Paving Improvement Project — EST. START DATE: 16-Sep-2024

| Item No. | Bid Item | Quantity | Unit | Onyx Paving Company, Inc. | | Marjani Builders, Inc. | | Leonida Builders, Inc. | |
|---|---|---|---|---|---|---|---|---|---|
| | | | | Unit Price | Item Price | Unit Price | Item Price | Unit Price | Item Price |
| 1 | Mobilization (Maximum 5% of total bid price) | 1 | LS | $28,000.00 | $28,000.00 | $36,000.00 | $36,000.00 | $10,000.00 | $10,000.00 |
| 2 | Erosion Control | 1 | LS | $11,000.00 | $11,000.00 | $18,500.00 | $18,500.00 | $14,000.00 | $14,000.00 |
| 3 | Survey (Construction Staking) | 1 | LS | $24,000.00 | $24,000.00 | $30,000.00 | $30,000.00 | $8,000.00 | $8,000.00 |
| 4 | Removal of all trash and debris, shrubs, bushes, tree stumps, existing pavement, concrete, vgutter, pavement grindings from right of way | 1 | LS | $210,000.00 | $210,000.00 | $75,000.00 | $75,000.00 | $53,000.00 | $53,000.00 |
| 5 | Construct 2.5" AC over 4" Aggregate Base, Compact Top 6" to 95% Compaction | 36,907 | SF | $4.20 | $155,009.40 | $7.00 | $258,349.00 | $12.00 | $442,884.00 |
| 6 | Construct 2' Wide V-Gutter | 2,527 | LF | $42.00 | $106,134.00 | $50.00 | $126,350.00 | $28.00 | $70,756.00 |
| 7 | Construct V-Gutter Transition | 8 | EA | $1,625.00 | $13,000.00 | $1,000.00 | $8,000.00 | $1,000.00 | $8,000.00 |
| 8 | Remove and Replace Driveway, 6" Thick PCC (560-C-3250), Compact Top 6" to 95% Compaction | 1,405 | SF | $28.00 | $39,340.00 | $35.00 | $49,175.00 | $13.00 | $18,265.00 |
| 9 | Remove and Replace Sidewalk, 6" Thick PCC (560-C-3250) | 570 | SF | $22.00 | $12,540.00 | $32.00 | $18,240.00 | $14.00 | $7,980.00 |
| 10 | Washington Street – Sawcut 12"x 50' AC, Gravel Backfill & Redwood Headers | 1 | LS | $6,976.60 | $6,976.60 | $5,000.00 | $5,000.00 | $6,000.00 | $6,000.00 |
| 11 | Demobilization | 1 | LS | $22,000.00 | $22,000.00 | $15,000.00 | $15,000.00 | $10,000.00 | $10,000.00 |
| 12 | Unforeseen Work Not Covered Within All Other Bid Items | 1 | LS | $50,000.00 | $50,000.00 | $50,000.00 | $50,000.00 | $50,000.00 | $50,000.00 |
| | Last Minute Additions/Deductions | | | | $0.00 | | $0.00 | | $0.00 |
| | | | **Total Bid Price** | | **$678,000.00** | | **$689,614.00** | | **$698,885.00** |

| | | | |
|---|---|---|---|
| License Status | Active | Active | Active |
| Sub's License Status | Active | Active | Active |
| Bid Bond Company | Swiss Re Corporate Solutions | Merchants Bonding Company | Developers Surety and Indemnit |
| Submitted Entire Bid Package | Yes | Yes | Yes |
| Submitted Sub's Qualification Statement | Yes | Yes | Yes |
| DIR Status | Active | Active | Active |
| Error in Bid | No | No | No |

ATTACHMENT "C"

**CITY OF REDLANDS**

**MUNICIPAL UTILITIES & ENGINEERING DEPARTMENT**

BID ANALYSIS

PROJECT NO. 211014 — BID DATE: 17-Jul-2024

2025 Alley Paving Improvement Project — EST. START DATE: 16-Sep-2024

| Item No. | Bid Item | Quantity | Unit | Tyner Paving Company | | Hardy & Harper, Inc. | | We R Builders, Inc. | |
|---|---|---|---|---|---|---|---|---|---|
| | | | | Unit Price | Item Price | Unit Price | Item Price | Unit Price | Item Price |
| 1 | Mobilization (Maximum 5% of total bid price) | 1 | LS | $15,000.00 | $15,000.00 | $12,720.00 | $12,720.00 | $38,000.00 | $38,000.00 |
| 2 | Erosion Control | 1 | LS | $5,000.00 | $5,000.00 | $7,419.10 | $7,419.10 | $5,000.00 | $5,000.00 |
| 3 | Survey (Construction Staking) | 1 | LS | $15,000.00 | $15,000.00 | $23,800.00 | $23,800.00 | $25,000.00 | $25,000.00 |
| 4 | Removal of all trash and debris, shrubs, bushes, tree stumps, existing pavement, concrete, vgutter, pavement grindings from right of way | 1 | LS | $160,000.00 | $160,000.00 | $261,240.00 | $261,240.00 | $135,000.00 | $135,000.00 |
| 5 | Construct 2.5" AC over 4" Aggregate Base, Compact Top 6" to 95% Compaction | 36,907 | SF | $7.10 | $262,039.70 | $6.70 | $247,276.90 | $9.50 | $350,616.50 |
| 6 | Construct 2' Wide V-Gutter | 2,527 | LF | $65.90 | $166,529.30 | $52.00 | $131,404.00 | $42.00 | $106,134.00 |
| 7 | Construct V-Gutter Transition | 8 | EA | $700.00 | $5,600.00 | $3,250.00 | $26,000.00 | $4,200.00 | $33,600.00 |
| 8 | Remove and Replace Driveway, 6" Thick PCC (560-C-3250), Compact Top 6" to 95% Compaction | 1,405 | SF | $40.00 | $56,200.00 | $19.00 | $26,695.00 | $38.00 | $53,390.00 |
| 9 | Remove and Replace Sidewalk, 6" Thick PCC (560-C-3250) | 570 | SF | $30.00 | $17,100.00 | $20.00 | $11,400.00 | $25.00 | $14,250.00 |
| 10 | Washington Street – Sawcut 12"x 50' AC, Gravel Backfill & Redwood Headers | 1 | LS | $5,000.00 | $5,000.00 | $4,930.00 | $4,930.00 | $5,000.00 | $5,000.00 |
| 11 | Demobilization | 1 | LS | $5,000.00 | $5,000.00 | $5,300.00 | $5,300.00 | $2,500.00 | $2,500.00 |
| 12 | Unforeseen Work Not Covered Within All Other Bid Items | 1 | LS | $50,000.00 | $50,000.00 | $50,000.00 | $50,000.00 | $50,000.00 | $50,000.00 |
| | Last Minute Additions/Deductions | | | | $0.00 | | $0.00 | | $0.00 |
| | | | **Total Bid Price** | | **$762,469.00** | | **$808,185.00** | | **$818,490.50** |

| | | | |
|---|---|---|---|
| License Status | Active | Active | Active |
| Sub's License Status | Active | Active | Active |
| Bid Bond Company | Old Republic Surety Company | Fidelity and Deposit Company | Merchants Bonding Company |
| Submitted Entire Bid Package | Yes | Yes | Yes |
| Submitted Sub's Qualification Statement | Yes | Yes | Yes |
| DIR Status | Active | Active | Active |
| Error in Bid | No | No | No |

ATTACHMENT "C"

**CITY OF REDLANDS**

**MUNICIPAL UTILITIES & ENGINEERING DEPARTMENT**

BID ANALYSIS

PROJECT NO. 211014 — BID DATE: 17-Jul-2024

2025 Alley Paving Improvement Project — EST. START DATE: 16-Sep-2024

| Item No. | Bid Item | Quantity | Unit | J & A Engineering | | All American Asphalt | |
|---|---|---|---|---|---|---|---|
| | | | | Unit Price | Item Price | Unit Price | Item Price |
| 1 | Mobilization (Maximum 5% of total bid price) | 1 | LS | $15,500.00 | $15,500.00 | $45,000.00 | $45,000.00 |
| 2 | Erosion Control | 1 | LS | $5,000.00 | $5,000.00 | $4,600.00 | $4,600.00 |
| 3 | Survey (Construction Staking) | 1 | LS | $14,500.00 | $14,500.00 | $25,000.00 | $25,000.00 |
| 4 | Removal of all trash and debris, shrubs, bushes, tree stumps, existing pavement, concrete, vgutter, pavement grindings from right of way | 1 | LS | $120,300.00 | $120,300.00 | $365,000.00 | $365,000.00 |
| 5 | Construct 2.5" AC over 4" Aggregate Base, Compact Top 6" to 95% Compaction | 36,907 | SF | $18.00 | $664,326.00 | $7.10 | $262,039.70 |
| 6 | Construct 2' Wide V-Gutter | 2,527 | LF | $20.00 | $50,540.00 | $55.00 | $138,985.00 |
| 7 | Construct V-Gutter Transition | 8 | EA | $500.00 | $4,000.00 | $1,000.00 | $8,000.00 |
| 8 | Remove and Replace Driveway, 6" Thick PCC (560-C-3250), Compact Top 6" to 95% Compaction | 1,405 | SF | $25.00 | $35,125.00 | $55.00 | $77,275.00 |
| 9 | Remove and Replace Sidewalk, 6" Thick PCC (560-C-3250) | 570 | SF | $25.00 | $14,250.00 | $55.00 | $31,350.00 |
| 10 | Washington Street – Sawcut 12"x 50' AC, Gravel Backfill & Redwood Headers | 1 | LS | $5,000.00 | $5,000.00 | $15,000.00 | $15,000.00 |
| 11 | Demobilization | 1 | LS | $5,000.00 | $5,000.00 | $13,000.00 | $13,000.00 |
| 12 | Unforeseen Work Not Covered Within All Other Bid Items | 1 | LS | $50,000.00 | $50,000.00 | $50,000.00 | $50,000.00 |
| | Last Minute Additions/Deductions | | | | $0.00 | | $0.00 |
| | | | **Total Bid Price** | | **$983,541.00** | | **$1,035,249.70** |

| | | |
|---|---|---|
| License Status | Active | Active |
| Sub's License Status | Active | Active |
| Bid Bond Company | U.S. Specialty Insurance | Fidelity and Deposit Company |
| Submitted Entire Bid Package | No | Yes |
| Submitted Sub's Qualification Statement | Yes | Yes |
| DIR Status | Active | Active |
| Error in Bid | No | No |

Low Bidders #10 and #11

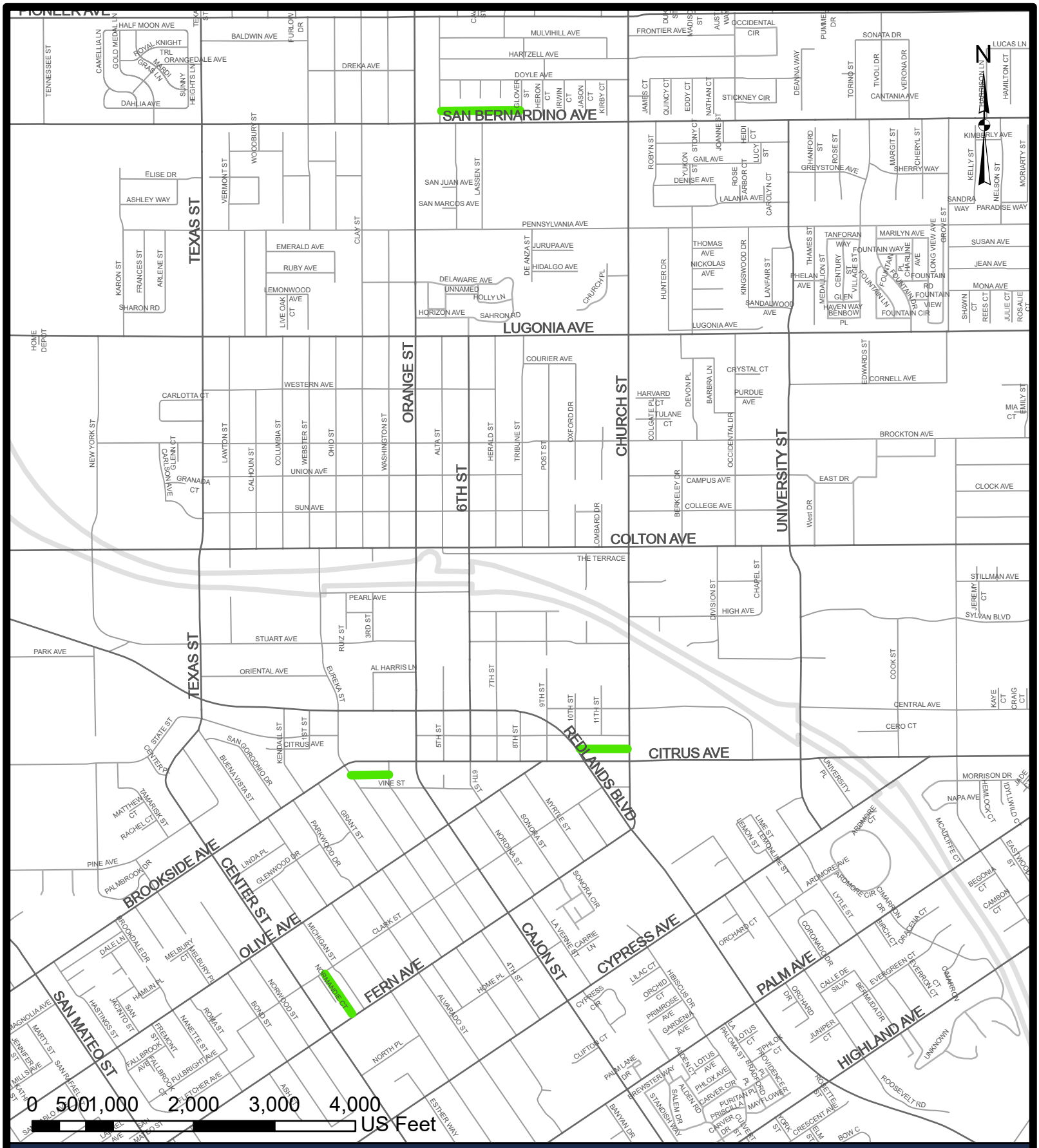


# 2025 ALLEY PAVING IMPROVEMENT PROJECT LOCATION MAP

**ALLEY CIP FY 25/26**

# CONSTRUCTION PLANS FOR
# CITY OF REDLANDS

# 2025 ALLEY PAVING IMPROVEMENT PROJECT

## PROJECT No. 211014

**JUNE 2025**

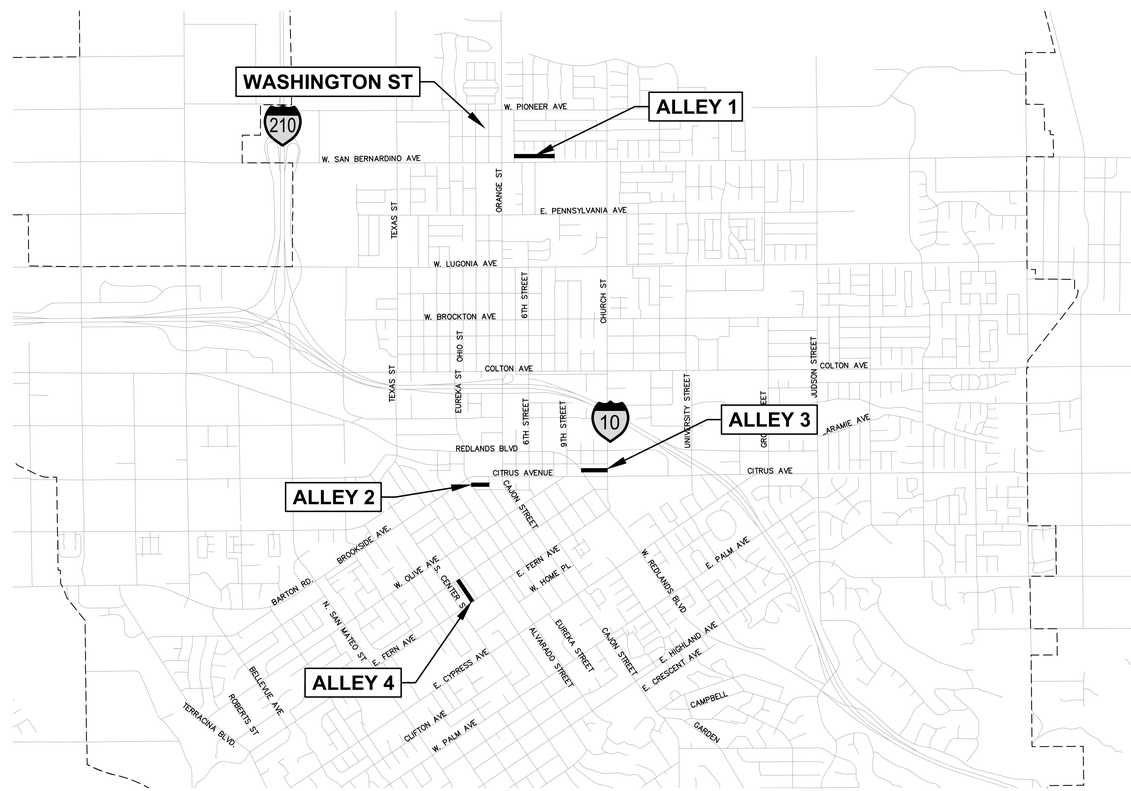


NORTH

VICINITY MAP
NTS

LINE IS 2 INCHES
AT FULL SIZE
IF NOT 2" – SCALE ACCORDINGLY

SHEET INDEX:

| SHEET NO. | DESCRIPTION |
|---|---|
| 1 | TITLE SHEET & VICINITY MAP |
| 2 | NOTES AND DETAILS |
| 3 | ALLEY 1 |
| 4 | ALLEY 2 & 3 |
| 5 | ALLEY 4 & WASHINGTON ST |

## CITY COUNCIL:

MARIO SAUCEDO, MAYOR
MARC SHAW, MAYOR PRO TEM
PAUL T. BARICH, COUNCIL MEMBER
EDDIE TEJEDA, COUNCIL MEMBER
DENISE DAVIS, COUNCIL MEMBER

## CITY CLERK:

JEANNE DONALDSON, CITY CLERK

## CITY STAFF:

CHARLES M. DUGGAN JR., CITY MANAGER

**BENCHMARK**

NONE REFERENCED

| Letter | Description | Date | Initial | Initial | Initial |
|---|---|---|---|---|---|
| | | | | | |

Revisions

REGISTERED PROFESSIONAL ENGINEER
GERARD JOHN RIVERA NEPOMUCENO
NO. C93200
CIVIL
STATE OF CALIFORNIA

**CITY OF REDLANDS**
Municipal Utilities and Engineering Department

**2025 ALLEY PAVING IMPROVEMENT PROJECT**
**PROJECT NO. 211014**
**TITLE SHEET & VICINITY MAP**

Designed by: JS
Date: 06/25
Checked by: GD
Date: 06/25
Drawn by: JS
Date: 06/25
Checked by: GD
Date: 06/25

Reviewed By: 06/12/2025
Gerard J. Nepomuceno, Civil Engineer, R.C.E. 93200 Date
Approved By: 06/12/2025
Goutam K. Dobey, City Engineer, R.C.E. 75646 Date

Sheet 1 of 5 Sheets
Scale: Horiz. AS SHOWN
Vert. NONE

F-2482 ST

K:\Capital Projects\211400 PWE RESEARCH\2025 Alley Paving Improvement Project\E DESIGN\CAD\F-2482-ST PLANS.dwg | Plotted: 6/12/2025

## GENERAL NOTES:

1. THE CONTRACTOR SHALL NOTIFY THE CITY ENGINEER'S REPRESENTATIVE TO SCHEDULE CITY PERSONNEL FOR A FINAL INSPECTION AND APPROVAL OF TRAFFIC CONTROL DEVICES PRIOR TO PROJECT ACCEPTANCE.
2. ALL CONSTRUCTION SIGNS SHALL BE BLACK ON ORANGE BACKGROUND WITH HIGH INTENSITY (FHWA TYPE III) REFLECTIVE SHEETING.
3. ALL CONSTRUCTION SIGNING SHALL BE IN CONFORMANCE WITH THE CURRENT EDITION OF THE MANUAL OF TRAFFIC CONTROLS FOR CONSTRUCTION AND MAINTENANCE WORK ZONES. PUBLISHED BY THE STATE OF CALIFORNIA, DEPARTMENT OF TRANSPORTATION.
4. THE CONTRACTOR SHALL INSTALL AND MAINTAIN ALL TRAFFIC CONTROL DEVICES AS NECESSARY FOR PUBLIC SAFETY. ALL WORK WITHIN 6-FEET OF THE SHOULDER WILL REQUIRE CLOSURE OF THE SHOULDER. ALL WORK WITHIN 6-FEET OF THE TRAVELED WAY WILL REQUIRE CLOSURE OF THAT LANE.
5. ALL CONFLICTING SIGNS SHALL BE REMOVED OR RELOCATED BY THE CONTRACTOR. RELOCATABLE SIGNS SHALL BE INSTALLED AS SPECIFIED ON THE PLANS OR AS DETERMINED IN THE FIELD BY THE CITY ENGINEER'S REPRESENTATIVE.
6. ALL WORK SHALL CONFORM TO THE "STANDARD SPECIFICATIONS FOR PUBLIC WORKS CONSTRUCTION (GREENBOOK)", LATEST EDITION, THE "STANDARD PLANS FOR PUBLIC WORKS CONSTRUCTION", 2012 EDITION, AND THE CITY OF REDLANDS STANDARD SPECIFICATIONS. ALL WORK SHALL BE COMPLETED TO THE SATISFACTION OF THE CITY ENGINEER'S REPRESENTATIVE.
7. IF ANY DAMAGE OCCURS AS A RESULT OF THIS PROJECT, THE CONTRACTOR IS RESPONSIBLE FOR REPAIR AT HIS EXPENSE.
8. SECTION 4216/4217 OF THE GOVERNMENT CODE REQUIRES A DIG ALERT IDENTIFICATION NUMBER BE ISSUED BEFORE THE "ENCROACHMENT PERMIT" WILL BE VALID. FOR YOUR DIG ALERT ID NUMBER, CALL UNDERGROUND SERVICE ALERT (TOLL FREE) AT 1-800-227-2600, TWO WORKING DAYS BEFORE YOU DIG.
9. PRIOR TO ROAD CONSTRUCTION, SURVEY MONUMENTS SHALL BE REFERENCED OUT AND CORNER RECORDS FILED WITH THE COUNTY SURVEYOR. SURVEY POINTS DESTROYED DURING CONSTRUCTION SHALL BE RESET, AND A SECOND CORNER RECORD FILED FOR THOSE POINTS PRIOR TO COMPLETION AND ACCEPTANCE OF THE PROJECT. SEE SECTION 01722 OF THE GENERAL REQUIREMENTS.
10. USE BEST MANAGEMENT PRACTICES (BMP) TO PREVENT AND CONTAIN ANY ILLEGAL DISCHARGES IN ACCORDANCE WITH CHAPTER 13.54 OF THE MUNICIPAL CODE AND THE TERMS OF NATIONAL POLLUTANT DISCHARGE ELIMINATION SYSTEM (NPDES) PROGRAM. THIS IS TO REMAIN IN EFFECT FOR THE ENTIRE DURATION OF PROJECT CONSTRUCTION UNTIL COMPLETION AND ACCEPTANCE BY THE CITY ENGINEER'S REPRESENTATIVE.
11. THE CONTRACTOR SHALL SUBMIT A TRAFFIC CONTROL/DETOUR PLAN TO THE CITY ENGINEER'S REPRESENTATIVE FOR APPROVAL. ALL APPROVED CONSTRUCTION SIGNAGE SHALL BE IN PLACE PRIOR TO THE START OF WORK.
12. THE CONTRACTOR SHALL MAKE HIS OWN DETERMINATION OF QUANTITIES BEFORE SUBMITTING HIS BID. ANY ITEM OR WORK REQUIRED BY THESE PLANS WHICH IS NOT SPECIFICALLY LISTED IN THE ESTIMATE OF QUANTITIES SHALL BE CONSIDERED AS INCLUDED IN THE ITEMS OF WORK.
13. IT SHALL BE THE CONTRACTOR'S RESPONSIBILITY TO PROVIDE ACCURATE "RECORD" DRAWINGS TO THE CITY UPON COMPLETION OF CONSTRUCTION.
14. PAVING WORK WITHIN TEN FEET OF ANY SHALLOW (1-1/2' OR LESS COVER) UNDERGROUND STRUCTURE OR UTILITY SHALL BE BROUGHT TO THE ATTENTION OF THE CITY ENGINEER'S REPRESENTATIVE.
15. ALL DELINEATORS, SIGNS, TRAFFIC CONES SHALL BE IN NEW CONDITION.
16. ALL UTILITY LINES, INCLUDING IRRIGATION AND STORM DRAIN LINES SHOWN ARE APPROXIMATE AND INTENDED FOR REFERENCE ONLY. CONTRACTOR TO POTHOLE ALL EXISTING UTILITIES PRIOR TO CONSTRUCTION AND NOTIFY THE ENGINEER IMMEDIATELY IF CONFLICTS ARISE. NO ADDITIONAL COMPENSATION WILL BE ALLOWED FOR UTILITY CONFLICTS IF NOT FIELD LOCATED PRIOR TO START OF CONSTRUCTION.
17. THE EXISTENCE AND APPROXIMATE LOCATIONS OF ANY UNDERGROUND UTILITIES OR STRUCTURES SHOWN ON THESE PLANS WERE OBTAINED BY A SEARCH OF THE AVAILABLE RECORDS. THE CIVIL ENGINEER ASSUMES NO LIABILITY AS TO THE EXACT LOCATION OF SAID LINES NOR FOR UTILITY OR IRRIGATION LINES WHOSE LOCATIONS ARE NOT SHOWN. THE CONTRACTOR SHALL BE RESPONSIBLE FOR NOTIFYING ALL UTILITY AND IRRIGATION COMPANIES PRIOR TO WORK OR EXCAVATION TO DETERMINE THE EXACT LOCATIONS OF ALL LINES AFFECTING THIS WORK, WHETHER OR NOT SHOWN HEREON, AND FOR ANY DAMAGE OR PROTECTION TO THESE PLANS.
18. ALL AGGREGATE BASE AND GRAVEL BACK FILL, WILL CONSIST OF CRUSHED AGGREGATE BASE (CAB), CRUSHED MISCELLANEOUS BASE, FINE MIX (CMB) OR CLASS 2 BASE (3/4" MAX.) @ 95% COMPACTION.

## ACCURACY DISCLAIMER:

THESE DRAWINGS ARE NOT BASED ON A FIELD SURVEY. ALL BASE DRAWING INFORMATION WAS GENERATED FROM DATA INCLUDING GEOGRAPHIC INFORMATION SYSTEM (GIS) SHAPEFILES FOR STREET CENTERLINES, RIGHT-OF-WAY, PARCEL LINES, AND UNDERGROUND UTILITIES. BASE DRAWINGS WERE THEN AUGMENTED WITH AVAILABLE UTILITY RECORD DRAWINGS, TOGETHER WITH A DESKTOP (VIRTUAL) ASSESSMENT OF STREET IMPROVEMENTS, AND A FIELD RECONNAISSANCE. THERE IS NO GUARANTEE AS TO THE ACCURACY OF SAID DRAWINGS AND POTENTIAL INTERFERENCES THAT MAY IMPACT THE ALLEY PAVING IMPROVEMENT PROJECT. ONCE PROPOSED ALIGNMENTS HAVE BEEN DULY ESTABLISHED IN THE FIELD AND APPROVED BY A CITY REPRESENTATIVE, CONTRACTOR SHALL POTHOLE EACH AND EVERY POTENTIAL INTERFERENCE AND CONNECTION LOCATION TO CONFIRM EXTENT OF THEIR RESPECTIVE INFLUENCES.

ROADWAY AND BUILDING ALIGNMENTS AND ANY HORIZONTAL DEFLECTIONS ARE GENERALLY BASED ON OFFSETS FROM CENTERLINE. ANY SHOWN V-GUTTERS ARE APPROXIMATE AND MAY REQUIRE ADJUSTMENT DURING CONSTRUCTION.

## ENGINEER'S NOTICE TO CONTRACTOR:

THE EXISTENCE AND APPROXIMATE LOCATIONS OF ANY UNDERGROUND UTILITIES OR STRUCTURES SHOWN ON THESE PLANS ARE OBTAINED BY A SEARCH OF THE AVAILABLE RECORDS. THE CIVIL ENGINEER ASSUMES NO LIABILITY AS TO THE EXACT LOCATION OF SAID LINES NOR FOR UTILITY OR IRRIGATION LINES WHOSE LOCATIONS ARE NOT SHOWN. THE CONTRACTOR SHALL BE RESPONSIBLE FOR NOTIFYING ALL UTILITY AND IRRIGATION COMPANIES PRIOR TO WORK OR EXCAVATION TO DETERMINE THE EXACT LOCATIONS OF ALL LINES AFFECTING THIS WORK, WHETHER OR NOT SHOWN HEREON, AND FOR ANY DAMAGE OR PROTECTION TO THESE PLANS.

NOTE:
1. REMOVE ALL: TRASH & DEBRIS, SHRUBS, BUSHES, TREE STUMPS,PAVEMENT GRINDINGS, OLD V-GUTTERS AND OLD PAVEMENT (PCC/AC) FROM RIGHT-OF-WAY
2. CONTRACTOR TO PAVE UP TO DRIVEWAY/ VEHICLE ACCESS OR FENCE LINE EVEN THOUGH OUTSIDE OF RIGHT OF WAY, WHERE LESS THAN 2 FEET.

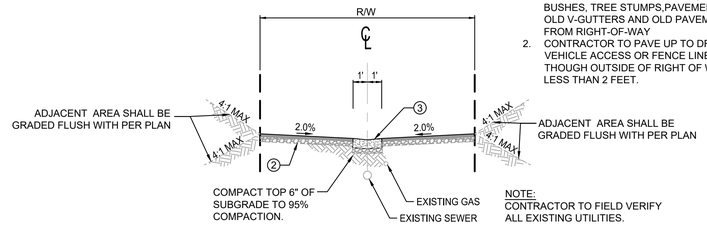


NOTE:
CONTRACTOR TO FIELD VERIFY ALL EXISTING UTILITIES.

### ALLEY TYPICAL SECTION
N.T.S

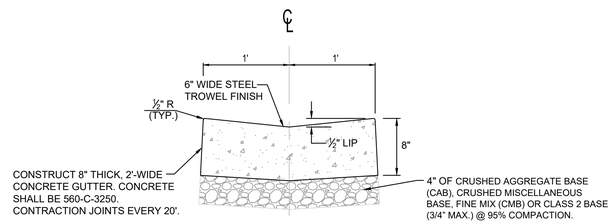


### 3 V-GUTTER DETAIL
N.T.S

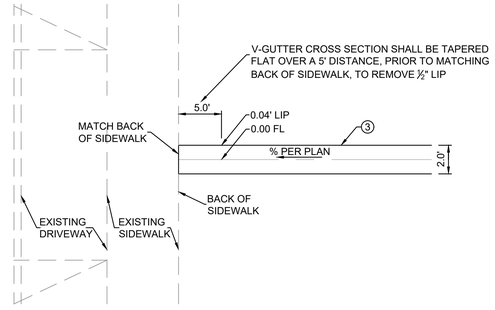


### 4 V-GUTTER TRANSITION DETAIL
N.T.S

CONSTRUCTION NOTES:

| NO. | DESCRIPTION | QUANTITY |
|---|---|---|
| 1 | PROTECT ITEM IN PLACE | |
| 2 | CONSTRUCT 2.5" AC OVER 4" AGGREGATE BASE, COMPACT TOP 6" TO 95% COMPACTION. | 36,907 SF |
| 3 | CONSTRUCT 2' WIDE V-GUTTER PER DETAIL ON SHEET 2. | 2,527 LF |
| 4 | CONSTRUCT V-GUTTER TRANSITION PER DETAIL ON SHEET 2. | 8 EA |
| 5 | REMOVE AND REPLACE DRIVEWAY, 6" THICK PCC (560-C-3250), COMPACT TOP 6" TO 95% COMPACTION. | 1,405 SF |
| 6 | REMOVE AND REPLACE SIDEWALK, 6" THICK PCC (560-C-3250), COMPACT TOP 6" TO 95% COMPACTION. | 570 SF |

REGISTERED PROFESSIONAL ENGINEER
GERARD JOHN RIVERA NEPOMUCENO
NO. C93200
CIVIL
STATE OF CALIFORNIA

| Letter | Description | Date | Initial | Initial | Initial |
|---|---|---|---|---|---|
| | | | | | |
| | | | | | |
| | | | | | |
| | | | | | |
| | | | | | |

Revisions

**CITY OF REDLANDS**
Municipal Utilities and Engineering Department

# 2025 ALLEY PAVING IMPROVEMENT PROJECT
## PROJECT NO. 211014

### NOTES AND DETAILS

Designed by: JS
Date: 6/25
Checked by: GD
Date: 6/25
Drawn by: JS
Date: 6/25
Checked by: GN
Date: 6/25

Reviewed By: 6/12/2025
Gerard J. Nepomuceno, Civil Engineer, R.C.E. 93200
Approved By: 6/12/2025
Goutam K. Dobey, City Engineer, R.C.E. 75646

Sheet 2 of 5 Sheets
Scale: Horiz. AS SHOWN
Vert. N/A

F-2482 ST

K:\Capital Projects\211400 PARS RESURFACING\2025 Alley Paving Improvement Project\6 DESIGN\CAD\F-2482-ST PLANS.dwg

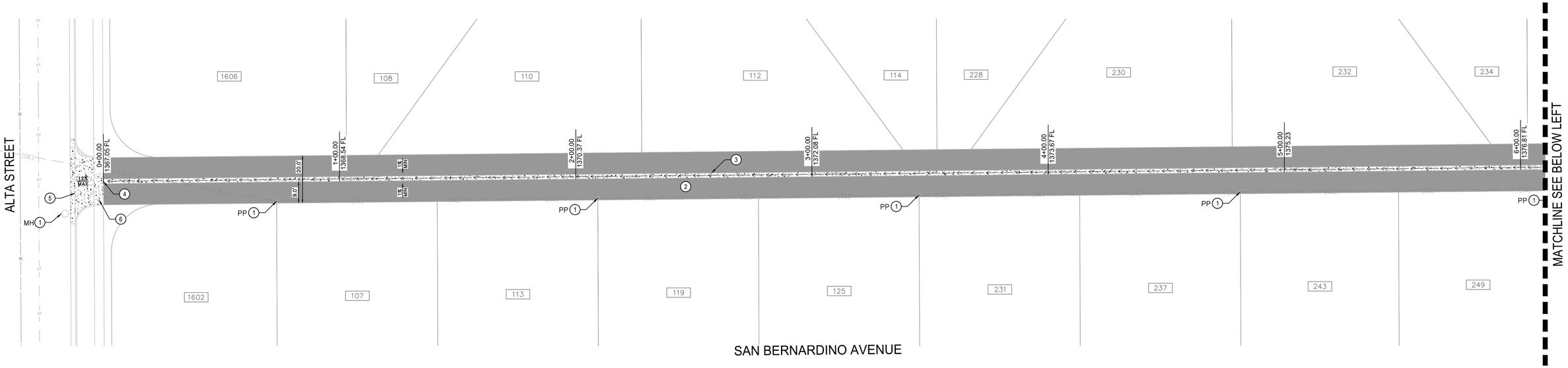


ALLEY 1
1"=20'

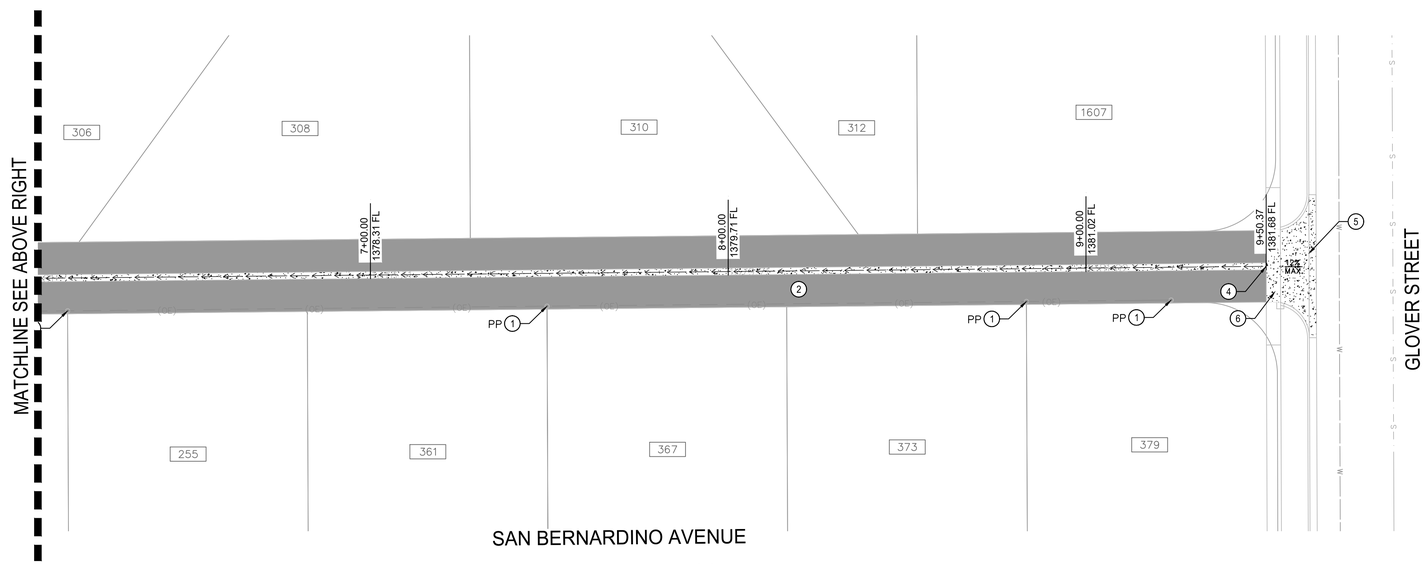


ALLEY 1
1"=20'

| CONSTRUCTION NOTES: | |
|---|---|
| NO. | DESCRIPTION |
| 1 | PROTECT ITEM IN PLACE |
| 2 | CONSTRUCT 2.5" AC OVER 4" AGGREGATE BASE, COMPACT TOP 6" TO 95% COMPACTION. |
| 3 | CONSTRUCT 2' WIDE V-GUTTER PER DETAIL ON SHEET 2. |
| 4 | CONSTRUCT V-GUTTER TRANSITION PER DETAIL ON SHEET 2. |
| 5 | REMOVE AND REPLACE DRIVEWAY, 6" THICK PCC (560-C-3250), COMPACT TOP 6" TO 95% COMPACTION. |

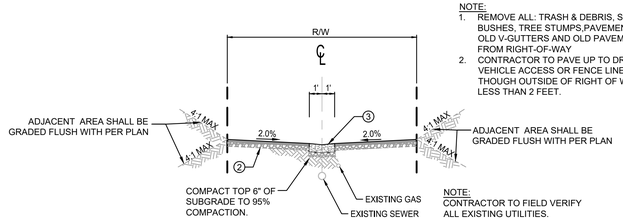


NOTE:
1. REMOVE ALL: TRASH & DEBRIS, SHRUBS, BUSHES, TREE STUMPS,PAVEMENT GRINDINGS, OLD V-GUTTERS AND OLD PAVEMENT (PCC/AC) FROM RIGHT-OF-WAY
2. CONTRACTOR TO PAVE UP TO DRIVEWAY/ VEHICLE ACCESS OR FENCE LINE EVEN THOUGH OUTSIDE OF RIGHT OF WAY, WHERE LESS THAN 2 FEET.

NOTE:
CONTRACTOR TO FIELD VERIFY ALL EXISTING UTILITIES.

ALLEY TYPICAL SECTION
N.T.S

LEGEND

- CONCRETE DRIVE WAY
- LIMITS OF AC PAVEMENT
- V-GUTTER
- RIGHT OF WAY/PROPERTY LINE

NORTH

REGISTERED PROFESSIONAL ENGINEER
GERARD JOHN RIVERA NEPOMUCENO
NO. C93200
CIVIL
STATE OF CALIFORNIA

| Letter | Description | Date | Initial | Initial | Initial |
|---|---|---|---|---|---|
| | | | | | |
| | | | | | |
| | | | | | |
| | | | | | |
| | | | | | |

Revisions

**CITY OF REDLANDS**
Municipal Utilities and Engineering Department

# 2025 ALLEY PAVING IMPROVEMENT PROJECT
## PROJECT NO. 211014
### ALLEY 1

Designed by: JS
Date: 6/25
Checked by: GD
Date: 6/25
Drawn by: JS
Date: 6/25
Checked by: GN
Date: 6/25

Reviewed By: 6/12/2025
Gerard J. Nepomuceno, Civil Engineer, R.C.E. 93200
Approved By: 6/12/2025
Goutam K. Dobey, City Engineer, R.C.E. 75646

Sheet 3 of 5 Sheets
Scale: Horiz. AS SHOWN
Vert. N/A

F-2482 ST

K:\Capital Projects\211400 PARKS RESURFACING\2025 Alley Paving Improvement Project\6 DESIGN\CAD\F-2482-ST PLANS.dwg

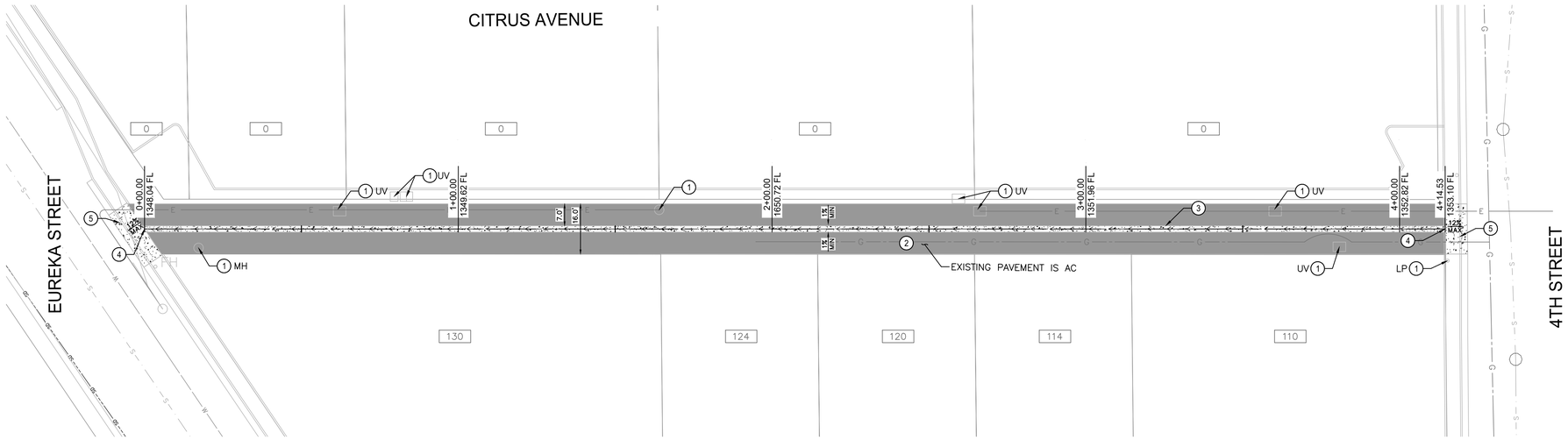


ALLEY 2
1"=20'

NORTH

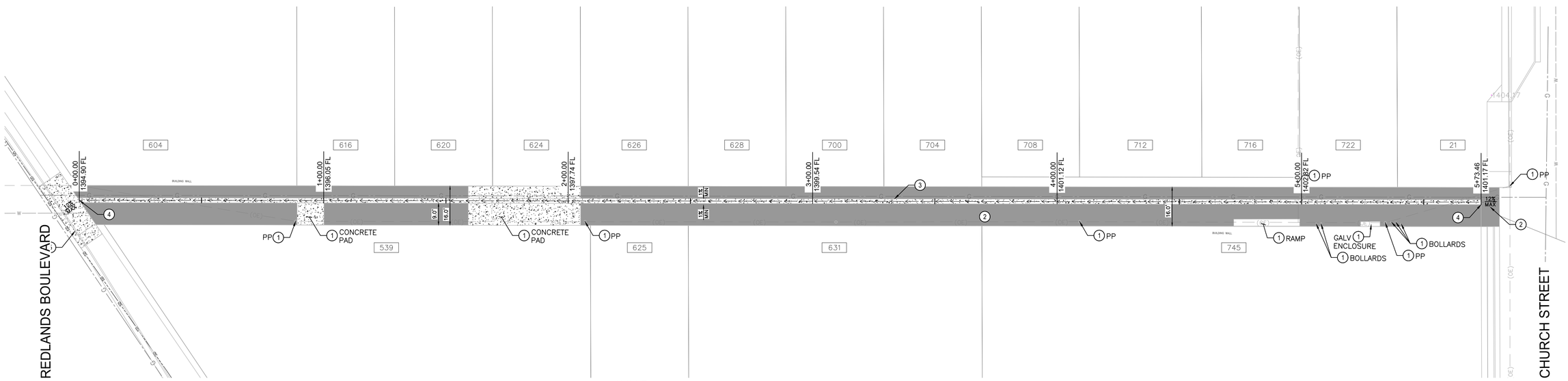


ALLEY 3
1"=20'

NORTH

| CONSTRUCTION NOTES: | |
|---|---|
| NO. | DESCRIPTION |
| 1 | PROTECT ITEM IN PLACE |
| 2 | CONSTRUCT 2.5" AC OVER 4" AGGREGATE BASE, COMPACT TOP 6" TO 95% COMPACTION. |
| 3 | CONSTRUCT 2' WIDE V-GUTTER PER DETAIL ON SHEET 2. |
| 4 | CONSTRUCT V-GUTTER TRANSITION PER DETAIL ON SHEET 2. |
| 5 | REMOVE AND REPLACE DRIVEWAY, 6" THICK PCC (560-C-3250), COMPACT TOP 6" TO 95% COMPACTION. |

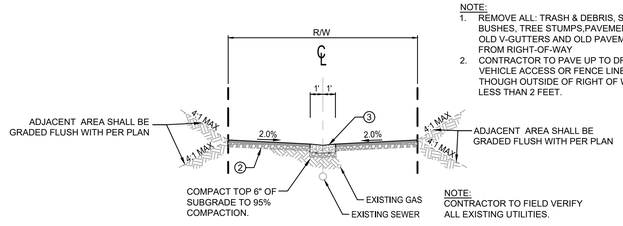


NOTE:
1. REMOVE ALL: TRASH & DEBRIS, SHRUBS, BUSHES, TREE STUMPS,PAVEMENT GRINDINGS, OLD V-GUTTERS AND OLD PAVEMENT (PCC/AC) FROM RIGHT-OF-WAY
2. CONTRACTOR TO PAVE UP TO DRIVEWAY/ VEHICLE ACCESS OR FENCE LINE EVEN THOUGH OUTSIDE OF RIGHT OF WAY, WHERE LESS THAN 2 FEET.

NOTE:
CONTRACTOR TO FIELD VERIFY ALL EXISTING UTILITIES.

ALLEY TYPICAL SECTION
N.T.S

LEGEND

- CONCRETE DRIVE WAY
- LIMITS OF AC PAVEMENT
- V-GUTTER
- RIGHT OF WAY/PROPERTY LINE

REGISTERED PROFESSIONAL ENGINEER
GERARD JOHN RIVERA NEPOMUCENO
NO. C93200
CIVIL
STATE OF CALIFORNIA

| Letter | Description | Date | Initial | Initial | Initial |
|---|---|---|---|---|---|
| | | | | | |
| | | | | | |
| | | | | | |
| | | | | | |
| | | | | | |

Revisions

**CITY OF REDLANDS**
Municipal Utilities and Engineering Department

# 2025 ALLEY PAVING IMPROVEMENT PROJECT
## PROJECT NO. 211014
### ALLEY 2 & 3

Designed by: JS
Date: 6/25
Checked by: GD
Date: 6/25
Drawn by: JS
Date: 6/25
Checked by: GN
Date: 6/25

Reviewed By: 6/12/2025
Gerard J. Nepomuceno, Civil Engineer, R.C.E. 93200
Approved By: 6/12/2025
Goutam K. Dobey, City Engineer, R.C.E. 75646

Sheet 4 of 5 Sheets
Scale: Horiz. AS SHOWN
Vert. N/A

F-2482 ST

G:\Capital Projects\211400 PARKS RESURFACING\2025 Alley Paving Improvement Project\6 DESIGN\CAD\F-2482-ST PLANS.dwg

MICHIGAN STREET
CLARK STREET
FERN AVENUE
NORMANDIE COURT
304
306
310
314
318
322
326
332
610
303
307
311
315
319
321
327
333
624
DWY
ROCK CURB
PP
0+00.00 1375.20 FL
1+00.00 1378.87 FL
2+00.00 1382.70 FL
3+00.00 1386.02 FL
4+00.00 1389.19 FL
5+00.00 1392.40 FL
5+86.38 1395.74
1½" MAX
1½" MAX - MIN
10'
4'
(OE)
(GE)
(GE)
(G

# CITY OF REDLANDS
# MUNICIPAL UTILITIES & ENGINEERING DEPARTMENT

**Bid Proposal, Contract Documents and Specifications**

**For**

# 2025 ALLEY PAVING IMPROVEMENT PROJECT
# PROJECT NO. 211014

REGISTERED PROFESSIONAL ENGINEER
GERARD JOHN RIVERA NEPOMUCENO
NO. C93200
CIVIL
STATE OF CALIFORNIA

RECYCLED PAPER

**JUNE 2025**

CITY OF REDLANDS

MUNICIPAL UTILITIES & ENGINEERING DEPARTMENT

Bid Proposal, Contract Documents and Specifications

for

# 2025 ALLEY PAVING IMPROVEMENT PROJECT PROJECT NO. 211014

For use in conjunction with specifications entitled: "Standard Specifications for Public Works Construction (Greenbook)" 2021 Edition; "Standard Plans for Public Works Construction" 2021 Edition; Municipal Utilities and Engineering Department's Water Systems Standard Specifications and Sanitary Sewer System Standard Specifications, latest editions; and General Permit Conditions and Trench Specifications.

**City Council:**
Mario Saucedo, Mayor
Marc Shaw, Mayor Pro Tem
Paul T. Barich, Councilmember
Eddie Tejeda, Councilmember
Denise Davis, Councilmember

**City Clerk:**
Jeanne Donaldson, City Clerk

**City Staff:**
Charles M. Duggan Jr., City Manager

**JUNE 2025**

THIS PAGE INTENTIONALLY LEFT BLANK

# 2025 ALLEY PAVING IMPROVEMENT PROJECT

## PROJECT NO. 211014

## TABLE OF CONTENTS

(XX) REFLECTS PAGE IDENTIFICATION FOOTER ABBREVIATION


**NOTICE INVITING SEALED PROPOSALS (NIB)**

**BID DOCUMENTS (BD)**

INSTRUCTIONS TO BIDDERS ..... 1
PROPOSAL ..... 10
BID CERTIFICATION ..... 13
BID BOND ..... 14
NON-COLLUSION AFFIDAVIT ..... 15
STATEMENT BY BIDDER ..... 16
OFFICERS OF CORPORATION (Members of Firm) ..... 16
SUB-CONTRACTORS LIST ..... 17
QUALIFICATION AND EXPERIENCE STATEMENT ..... 18
GENERAL INFORMATION ..... 19

**CONTRACT DOCUMENTS (CD)**

PUBLIC WORKS CONSTRUCTION CONTRACT ..... 1

**GENERAL CONDITIONS (GC)**

SECTION 1 – GENERAL, TERMS, DEFINITIONS, ABBREVIATIONS, UNITS OF MEASURE, AND SYMBOLS ..... 1
SECTION 2 - SCOPE OF THE WORK ..... 2
SECTION 3 - CONTROL OF THE WORK ..... 3
SECTION 4 - CONTROL OF MATERIALS ..... 7
SECTION 5 – LEGAL RELATIONS AND RESPONSIBILITES ..... 8
SECTION 6 – PROSECUTION AND PROGRESS OF THE WORK ..... 30
SECTION 7 - MEASUREMENT AND PAYMENT ..... 32
SECTION 8 - FACILITIES FOR AGENCY PERSONNEL ..... 33
SECTION 9 - ASSIGNMENT OF UNFAIR BUSINESS PRACTICES CLAIMS ..... 33
SECTION 10 - TRENCHING AND EXCAVATION ..... 33
SECTION 11 - REMOVAL, RELOCATION OR PROTECTION OF EXISTING UTILITIES ..... 34
SECTION 200 - ROCK MATERIALS ..... 35
SECTION 201 - CONCRETE, MORTAR AND RELATED MATERIALS ..... 36

SECTION 203 - BITUMINOUS MATERIALS ..... 36
SECTION 206 - MISCELLANEOUS METAL ITEMS ..... 37
SECTION 207 – GRAVITY PIPE ..... 38
SECTION 211 - MATERIAL TESTS ..... 38
SECTION 214 - TRAFFIC STRIPING, CURB AND PAVEMENT MARKINGS, AND PAVEMENT MARKERS ..... 38
SECTION 300 - EARTHWORK ..... 39
SECTION 301 - TREATED SOIL, SUBGRADE PREPARATION AND PLACEMENT OF BASE MATERIALS ..... 43
SECTION 302 - ROADWAY SURFACING ..... 48
SECTION 303 - CONCRETE AND MASONRY CONSTRUCTION ..... 58
SECTION 304 - METAL FABRICATION AND CONSTRUCTION ..... 61
SECTION 314 - TRAFFIC STRIPING, CURB AND PAVEMENT MARKINGS, AND PAVEMENT MARKERS ..... 62

**GENERAL REQUIREMENTS**

SECTION 01110 COORDINATION OF WORK
SECTION 01112 DESCRIPTION OF WORK
SECTION 01200 MEASUREMENT AND PAYMENT
SECTION 01251 CHANGE ORDER REQUESTS
SECTION 01254 CHANGE ORDERS
SECTION 01298 SCHEDULE OF VALUES
SECTION 01321 CONSTRUCTION SCHEDULE
SECTION 01322 CONSTRUCTION PROGRESS PHOTOGRAPHY
SECTION 01323 CONSTRUCTION STATUS REPORTS
SECTION 01330 SUBMITTALS
SECTION 01571 STORMWATER POLLUTION PREVENTION PLAN
SECTION 01581 CONSTRUCTION INFORMATION SIGNS
SECTION 01721 MOBILIZATION
SECTION 01722 SURVEYING
SECTION 01732 POTHOLING
SECTION 01740 DEMOBILIZATION

**TECHNICAL SPECIFICATIONS**

SECTION 02222 PROTECTING EXISTING UNDERGROUND UTILITIES

**APPENDIX**


| | |
|---|---|
| APPENDIX A | CHECKLIST OF LABOR LAW REQUIREMENTS |
| APPENDIX B | CITY OF REDLANDS WORKDAY CONSTRUCTION SCHEDULE |
| APPENDIX C | CITY OF REDLANDS STANDARD DRAWINGS |
| APPENDIX D | PERMITS |
| APPENDIX E | CITY OF REDLANDS TRASH COLLECTION SCHEDULE |
| APPENDIX F | CITY OF REDLANDS CONTRACTOR SAFETY PROGRAM |

THIS PAGE INTENTIONALLY LEFT BLANK

**NOTICE INVITING SEALED PROPOSALS (NIB)**
**For**
**2025 ALLEY PAVING IMPROVEMENT PROJECT**
**PROJECT NO. 211014**

**NOTICE IS HEREBY GIVEN** that the City Council of the City of Redlands invites all and will receive sealed Proposals (Bids) at the office of the City Clerk, City of Redlands, 35 Cajon Street, Suite 4, Redlands, CA 92373, on **July 17, 2025**, up to the hour of **2:00 p.m.,** at which time they will be opened and publicly read. Bids shall be marked: **BID FOR: 2025 ALLEY PAVING IMPROVEMENT PROJECT, PROJECT NO. 211014.**

The City Council of the City of Redlands reserves the right to reject any and all Bids, to waive any irregularity, and award contracts in the best interests of the City.

The City of Redlands utilizes PlanetBids, a web based bid management service to manage request for bids. PlanetBids does not charge a fee to access and view current project 'Request for Bids"; however, they require potential contractors, subcontractors and suppliers to provide contact information in order to download files, receive addendum notifications and to receive automatic updates or revisions to projects. PlanetBids can be accessed through the City of Redlands website at http://www.cityofredlands.org/RFP.

Proposals (Bids) shall be executed on the separately bound forms included within the "Bid Submittal Package" in accordance with the instructions contained therein.

Bid security, in the form of a cashier's check, a certified check made to the order of the City of Redlands, or a Bidder's Bond, and in an amount not less than ten percent (10%) of the amount of the Bid is required to be submitted with each Bid. Said check or bond shall be given as a guarantee that the bidder will enter into contract with the City of Redlands if awarded the work, and will be declared forfeited if the selected bidder fails to enter into contract within fourteen (14) days after Notice of Award.

The Bidder to whom award is made will be required to furnish a Labor and Material Bond and a Faithful Performance Bond each in an amount of 100% of the Bid amount, from surety company satisfactory to the City of Redlands.

Pursuant to CA Labor Code Section 1770 et seq., the successful bidder shall pay not less than the prevailing rate of per diem wages as determined by the Director of the California Department of Industrial Relations. Copies of such prevailing rate of per diem wages are available at http://www.dir.ca.gov/OPRL/PWD/. Copies of the prevailing wage determination are also on file at the City of Redlands and shall be made available to any interested party upon request.

Pursuant to provisions of Section 22300 of the California Public Contract Code, the Contractor may substitute securities for any monies withheld by the City to ensure performance of the work.

Pursuant to the provisions of Section 3300 of the California Public Contract Code, Bidders shall be licensed as "Class A" and provide their California State Contractor's License numbers to the City. In

addition, no contractor or subcontractor may be listed on a bid proposal for a public works project (submitted on or after March 1, 2015) unless registered with the Department of Industrial Relations pursuant to Labor Code section 1725.5 [with limited exceptions from this requirement for bid purposes only under Labor Code section 1771.1(a)]. No contractor or subcontractor may be awarded a contract for public work on a public works project (awarded on or after April 1, 2015) unless registered with the Department of Industrial Relations pursuant to Labor Code section 1725.5. This project is subject to compliance monitoring and enforcement by the Department of Industrial Relations.

All terms and conditions contained in the Contract Documents including the Instructions to Bidders shall become a part of the Contract. No Bidder may withdraw their Bid for a period of sixty (60) days after the time of Bid Opening.

All questions related to this project shall be directed to Johana Silva, Project Manager, at 909-798-7584 Ext 7. It shall be understood, however, that no specification interpretations will be made by telephone, nor will any products be considered for approval prior to award of the Contract. Changes, if any, will be made by addendum prior to opening of Bids.

**BY ORDER OF THE CITY COUNCIL OF THE CITY OF REDLANDS, SAN BERNARDINO COUNTY, CALIFORNIA.**

Jeanne Donaldson

Jeanne Donaldson, City Clerk,
City of Redlands
San Bernardino County, California

# BID DOCUMENTS
# (BD)

THIS PAGE INTENTIONALLY LEFT BLANK

# INSTRUCTIONS TO BIDDERS
# For
# 2025 ALLEY PAVING IMPROVEMENT PROJECT
# PROJECT NO. 211014

Bids to receive consideration shall be made in accordance with the following instructions:

## 1. PROPOSALS:

a. Bids shall be made upon the form of proposal furnished by the City. All Bids shall be properly executed with all items filled in; the signatures of all persons signing shall be in longhand. If the unit price and the total amount named by a Bidder for any item are not in agreement, the unit price shall be considered as representing the Bidder's intention, and the totals may be corrected by the Engineer to conform thereto. If the sum of the individual bid item's and the total amount named by a Bidder are not in agreement, the sum of the bid item's shall be considered as representing the Bidder's intention, and the totals may be corrected by the Engineer to conform thereto. If the total price written in words and the total price written in figures are not in agreement, then the total price written in words will be considered as representing the Bidder's intention, and the totals will be corrected by the Engineer to conform thereto.

b. Proposals may be rejected if they show any alterations of form, additions not called for, conditional or alternative bids, incomplete Bids, erasures, or irregularities of any kind. Mistakes shall be lined through and the correct amount written above and initialed by the authorized agent of the Bidder.

c. Bids shall be accompanied by a cashier's or a certified check or Bidder's admitted corporate surety bond, in an amount not less than ten percent (10%) of the bid, made payable to the City of Redlands. Said check or bond shall be given as a guarantee that the Bidder will enter into a contract if awarded the work. In the case of refusal or failure to enter into said Contract, within fourteen (14) days after Notice of Award by the City in writing, the security shall be applied by the City to the difference between such bid and next lowest acceptable bid and surplus, if any, shall be returned to Bidder if cash or check is used, or to Surety if bid bond is used.

d. Before submitting a bid, Bidders shall carefully examine the Plans; read the Specifications; read all other Contract documents; shall visit the site of the work; shall fully inform themselves as to all existing conditions and limitations; and include in the bid a sum to cover the cost of all items included in the Contract. No allowance will be made due to lack of examination or knowledge. The submission of a bid shall be conclusive evidence that the bidder has investigated and is satisfied as to the conditions to be encountered as to character, quality and scope of work to be performed; the quantities of materials to be furnished; and as to the requirements of the Bid Proposal, plans and specifications.

e. Pursuant to CA Labor Code Section 1770 et seq., the successful bidder shall pay not less than the prevailing rate of per diem wages as determined by the Director of the California Department of Industrial Relations. Copies of such prevailing rate of per diem wages are available at http://www.dir.ca.gov/OPRL/PWD/. Copies of the prevailing wage determination are also on file at the City of Redlands and shall be made available to any interested party upon request.

f. The bid must be submitted on or before the date and time specified in the Notice Inviting Sealed Proposals (Bids). The bid shall be submitted in a sealed envelope marked in the lower left corner as follows:

**BID FOR: 2025 ALLEY PAVING IMPROVEMENT PROJECT, PROJECT NO. 211014**

g. Bids will be opened and publicly read aloud at the time set in the Notice Inviting Sealed Proposals (Bids), in the Office of the City Clerk, Civic Center, 35 Cajon Street, Suite 4, Redlands, California.

## 2. AGREEMENT AND BONDS:

The form of Contract which the successful Bidder, as Contractor, will be required to execute is included in the Contract Documents (CD) of these specifications and should be carefully examined by the Bidder. The Agreement, admitted Corporate Surety Bonds and other documents to be executed by the Contractor shall be executed in original-duplicates stamped according to law, one of which original-duplicates shall be filed with the City Clerk of the City of Redlands. The successful Bidder, simultaneously with the execution of the Agreement, will be required to furnish a faithful performance bond and a labor and material bond, each in an amount equal to one hundred percent (100%) of the Contract price. Said bonds shall provide that if the Contractor or their Subcontractor fails to pay for any materials, provision, provender or other supplies or items used in, upon, for or about the performance of the work contracted to be done, or for any work of labor thereon of any kind, or for amounts due under the Unemployment Insurance Act or Workman's Compensation, with respect to such work or labor, that the surety or sureties will pay for the same. The amount shall not exceed the sum specified in the bond, and also, in case suit is brought upon the bond, a reasonable attorney's fee to be fixed by the court. All bonds shall be secured from surety companies satisfactory to the City of Redlands and whose name is on file with the County Clerk of San Bernardino County, as an approved and financially sound surety company authorized to transact business in this state.

## 3. WITHDRAWAL OF BIDS:

a. Any Bidder may withdraw his Bid, only by written request, at any time prior to the scheduled time for Bid Opening.

b. No Bidder may withdraw his Bid for a period of sixty (60) days after the time of Bid Opening except as allowed by the California Public Contract Code.

## 4. INSURANCE AND HOLD HARMLESS REQUIREMENTS:

Before entering into a Contract, the Bidder to whom the Contract has been awarded shall furnish satisfactory evidence that they have secured all required insurance from a responsible insurance company authorized to do business in California and satisfactory to the City, and such insurance shall be maintained in full force and effect at the Contractor's own expense during the life of the Contract. Contractor shall furnish the City with the customary Certificates of Insurance for all required insurance listed below. General Liability Insurance shall name the City and the Consultant, as an additional insured and shall be primary and non-contributing to any insurance or self-insurance maintained by the City. All liability insurance policies shall bear an endorsement or shall have attached a rider whereby it is provided that, in the event of expiration or proposed cancellation of such policies for any reason whatsoever, the City shall be notified by registered mail, return receipt requested, giving sufficient time before the date thereof to comply with any applicable law or statute, but in no event less than forty five (45) days before expiration or cancellation is effective.

The coverage shall provide the following minimum limits based on the type of work proposed under this Contract. The Contractor shall determine if the proposed work requires Tier 1 or Tier 2 Insurance Requirements as follows:

| CONTRACTED OPERATIONS DESIGNATED AS TIER 1 | | |
|---|---|---|
| Air Conditioning (HVAC) Systems (installation) | Electric Light or Power Line Construction | Pipeline Construction |
| Airport Runways (paving, repaving, etc.) | Elevator Work | Roofing |
| Blasting Operations | Excavation | Sandblasting |
| Bridge or Elevated Highway Construction | Fire Suppression Systems (installation) | Sewer and Water Main Construction |
| Buildings Structural Work (including elevators) | Gas Mains or Connections Construction | Sign Erection (streets) |
| Building Structure (raising or moving) | Geophysical Exploration | Solar Energy |
| Cable Installation in Conduits and Conduit Construction (streets) | Grading of Land | Street Cleaning |
| Caisson or Cofferdam Work | Hazardous Materials Contractors | Street or Road Construction |
| Dam or Reservoir Construction | Irrigation or Drainage Construction | Tank Construction, Installation, Erection or Repair |
| Demolition (structures) | Landscape Construction (street or street medians) | Telephone or Cable Line Construction |
| Drilling | Painting (exterior greater than single story) | Tree Pruning, Dusting, Spraying or Removal |

## TIER 1 DESIGNATED INSURANCE REQUIREMENTS

a. Commercial General Liability
   - $1 Million Per Occurrence/ $2 Million Aggregate
     - City listed as an Additional Insured on the coverage
     - Coverage is primary and non-contributory
     - If scope of work is within 50 feet of any railroad, endorsement citing inclusion of liability associated with this work is required
     - If any policy forms of endorsements are cited to grant extension of coverage, they must be included with the Certificate of Insurance submission

b. Business Auto Liability
   - $1 Million Combined Single Limit
     - City listed as an Additional Insured on the coverage
     - Must include liability arising from all owned, leased, hired, and non-owned autos
     - If any policy forms of endorsements are cited to grant extension of coverage, they must be included with the Certificate of Insurance submission
   - If Contractor or its subcontractors or suppliers haul hazardous material (including, without limitation, waste), Auto Liability insurance must be applicable to all hazardous waste hauling vehicles, and include MCS 90 and CA9948 Endorsements.

c. Commercial Umbrella/ Excess Liability
   - $5 Million Per Occurrence/ Aggregate
     - City listed as an Additional Insured on the coverage
     - Coverage is primary and non-contributory
     - If any policy forms of endorsements are cited to grant extension of coverage, they must be included with the Certificate of Insurance submission

d. Workers Compensation
   - $1 Million Per Occurrence for Bodily Injury by Accident
   - $1 Million Each Employee for Bodily Injury by Disease
   - $1 Million Policy Limit for Bodily Injury by Accident
     - Waiver of Subrogation in favor of City
     - If any policy forms of endorsements are cited to grant extension of coverage, they must be included with the Certificate of Insurance submission

e. Pollution Policy (Hazardous Materials) [If Applicable]
   - Required of Projects that involve Demolition and/or Excavation Activities
   - $1 Million Per Occurrence/ $2 Million Aggregate
   - City listed as an Additional Insured on the coverage

| CONTRACTED OPERATIONS DESIGNATED AS TIER 2 | | |
|---|---|---|
| Air Conditioning (HVAC) Systems (service and repair) | Carpentry (building interiors) | Fire Suppression Systems (service and repair) |
| Alarms and Alarm Systems | Communications Equipment Installation (interior) | Landscape Construction |
| Building Interior Work (service, repair and non-structural remodeling) | Driveway, Parking Area or Sidewalk (paving or repaving) | Painting (exterior) |
| Cable Installation in Conduits (buildings) | Fence Erection | All Other Job Types including Vendors |

## TIER 2 DESIGNATED INSURANCE REQUIREMENTS

a. Commercial General Liability
   - $1 Million Per Occurrence/ $2 Million Aggregate
     - City listed as an Additional Insured on the coverage
     - Coverage is primary and non-contributory
     - If scope of work is within 50 feet of any railroad, endorsement citing inclusion of liability associated with this work is required
     - If any policy forms of endorsements are cited to grant extension of coverage, they must be included with the Certificate of Insurance submission

b. Business Auto Liability
   - $1 Million Combined Single Limit
     - City listed as an Additional Insured on the coverage
     - Must include liability arising from all owned, leased, hired, and non-owned autos
     - If any policy forms of endorsements are cited to grant extension of coverage, they must be included with the Certificate of Insurance submission
   - If Contractor or its subcontractors or suppliers haul hazardous material (including, without limitation, waste), Auto Liability insurance must be applicable to all hazardous waste hauling vehicles, and include MCS 90 and CA9948 Endorsements.

c. Workers Compensation
   - $1 Million Per Occurrence for Bodily Injury by Accident
   - $1 Million Each Employee for Bodily Injury by Disease
   - $1 Million Policy Limit for Bodily Injury by Accident
     - Waiver of Subrogation in favor of City
     - If any policy forms of endorsements are cited to grant extension of coverage, they must be included with the Certificate of Insurance submission

d. Pollution Policy (Hazardous Materials) [If Applicable]
   - Required of Projects that involve Demolition and/or Excavation Activities
   - $1 Million Per Occurrence/ $2 Million Aggregate
   - City listed as an Additional Insured on the coverage

Contractor expressly waives all rights to subrogation against the City, its officers, employees and volunteers for losses arising from work performed by Contractor for City by expressly waiving Contractor's immunity for injuries to Contractor's employees and agrees that the obligation to indemnify, defend and hold harmless provided for in this Agreement extend to any claim brought by or on behalf of any employee of Contractor. This waiver is mutually negotiated by the parties. This shall not apply to any damage resulting from the sole negligence of City, its agents and employees. To the extent any of the damages referenced herein were caused by or resulted from the concurrent negligence of City, its agents or employees, the obligations provided herein to indemnify, defend and hold harmless are valid and enforceable only to the extent of the negligence of contractor, its officers, agents and employees.

Subcontractors. The prime contractor shall include all subcontractors as insureds under its policies or shall furnish separate certificates and endorsements from each subcontractor.

The Contractor shall not assign or sublet the contract, in whole or in part, without the written consent of the City, nor shall the contractor assign any monies due to, or to become due to, Contractor hereunder without prior written consent of the City.

The Contractor shall be fully responsible to the City for the acts and omissions of the subcontractor and persons either directly or indirectly employed by the Contractor. Consent to subcontracting part of the work shall, in no way, release the Contractor from responsibility for performance of the work, and Contractor will be held, in all respects, accountable for the same as if no consent had been given. The Contractor shall give personal attention to this work which is sublet. Nothing contained in the contract documents shall create any contractual relation between any subcontractor and the City.

Hold Harmless and Indemnification. Contractor shall indemnify, hold harmless and defend City and its elected officials, agents and employees and the Consultant from and against any and all claims, losses or liability, including attorney's fees, arising from injury or death to persons or damage to property occasioned by any act, omission or failure to act of Contractor, its subcontractors, and any officers, agents and employees in performing the work required by this Agreement. Contractor's obligations under this provision shall not be limited in any way by any terms of this Agreement, or the insurance limits.

## 5. LICENSES AND PERMITS:

No bid will be accepted from a Contractor who is not licensed in accordance with the law under the provisions of Division III, Chapter 9 of the Business and Professions Code of the State of California.

The Contractor shall, at the time of bid opening, possess a valid "Class A" or "Class C-34" Contractor's license, and provide its California State Contractor's License number to the City.

All subcontractors listed at the time of bid opening shall possess a valid Contractor's license for the work in which they are specified to complete within the Bid Submittal Package.

The Contractor shall, prior to Notice to Proceed, procure all other permits and licenses as stipulated in the GENERAL CONDITIONS.

In addition, no contractor or subcontractor may be listed on a bid proposal for a public works project (submitted on or after March 1, 2015 or awarded on or after April 1, 2015) unless registered with the Department of Industrial Relations pursuant to Labor Code section 1725.5. Contractors shall submit proof of registration status with their bid submission to the City of Redlands. This project is subject to compliance monitoring and enforcement by the Department of Industrial Relations.

## 6. SUBSTITUTION OF SECURITIES:

In accordance with applicable provisions of State law, the Contractor will be permitted to substitute qualified securities in lieu of retention of withheld progress payments by the Owner.

## 7. SUBCONTRACTORS:

Pursuant to Section 4105 of the California Public Contract Code, the bidder may not circumvent the requirement to list subcontractors by the device of listing one subcontractor, who in turn sublets portions constituting a majority of the work covered by the contract.

A. Pursuant to California Government Code section 4106, subcontractors who will perform work or labor or render services in an amount in excess of one-half of one percent of the Contractor's total bid shall be set forth in a list of subcontractors within the bid documents. Such list shall be accompanied by an experienced statement with pertinent information regarding similar projects and other evidence of qualifications for each such subcontractor, supplier, individual, or entity if requested by City. If City or engineer, after doing an investigation, has reasonable objection to any proposed subcontractor, supplier, individual, or entity, City may, before the notice of award is given, request the apparent successful bidder to submit a substitute, without an increase in the bid.

B. If the apparent successful bidder declines to make any such substitution, City may award the contract to the next lowest bidder that proposes to use acceptable subcontractors, suppliers, individuals, or entities declining to make the request and substitutions will not constitute grounds for forfeiture of the bid security of any bidder. Any subcontractor, supplier, individual or entity so listed and against which City makes no written objection prior to the giving of the notice of award will be deemed acceptable by City subject to verification of such assessments after the effective date of the agreement as provided herein.

## 8. NON DEBARRED CONTRACTORS AND SUBCONTRACTORS

The Contractor and all of its subcontractors shall, at the time of bid opening and for performance of this public works contract, be non-debarred contractors and not be ineligible Contractors pursuant to Public Contract Code section 6109 and Labor Code sections 1777.1 and 1777.7.

## 9. LABOR LAW REQUIREMENTS

Prior to the start of construction, the Contractor and each subcontractor shall submit to the City an executed Checklist of Labor Law Requirements, included within Appendix A, certifying that each Contractor and Subcontractor will comply with the foregoing Labor Law requirements; and fully understands that failure to comply with these requirements will subject it to the penalties cited herein.

By submitting a bid, the prime contractor and subcontractors involved in this project assure that they intend to comply with the labor law requirements noted within Appendix A, fully understanding that failure to comply may subject them to penalties as noted.

## 10. BID PROTEST PROCEDURES

Any bid protest must be in writing and received by the City Clerk's Office at 35 Cajon Street, Suite 4, Redlands, CA 92373, before 5:00 p.m. no later than two working days following the bid opening (the "Bid Protest Deadline") and must comply with the following requirements:

**10.1 General**. Only a bidder who has actually submitted a Bid Proposal is eligible to submit a bid protest against another bidder. Subcontractors are not eligible to submit bid protests. A bidder may not rely on the bid protest submitted by another bidder, but must timely pursue its own protest. If required by City, the protesting bidder must submit a non-refundable fee in the amount specified by City, based upon City's reasonable costs to administer the bid protest. Any such fee must be submitted to City no later than the Bid Protest Deadline, unless otherwise specified. For purposes of this Section, a "working day" means a day that City is open for normal business, and excludes weekends and holidays as observed by the City.

**10.2 Protest Contents.** The bid protest must contain a complete statement of the basis for the protest and all supporting documentation. Material submitted after the Bid Protest Deadline will not be considered. The protest must refer to the specific portion or portions of the Contract Documents upon which the protest is based. The protest must include the name, address, email address, and telephone number of the person representing the protesting bidder if different from the protesting bidder.

**10.3 Copy to Protested Bidder**. A copy of the protest and all supporting documents must be concurrently transmitted by fax or by email, by or before the Bid Protest Deadline, to the protested bidder and any other bidder who has a reasonable prospect of receiving an award depending on the outcome of the protest.

**10.4 Response to Protest.** The protested bidder may submit a written response to the protest, provided the response is received by the City Clerk's Office before 5:00 p.m., within two working days after the Bid Protest Deadline or after actual receipt of the bid protest, whichever is sooner (the "Response Deadline"). The response must include all supporting documentation. Material submitted after the Response Deadline will not be considered. The response must include the name, address, email address, and telephone number of the person representing the protested bidder if different from the protested bidder.

**10.5 Copy of Protesting Bidder.** A copy of the response and all supporting documents must be concurrently transmitted by fax or by email, by or before the Bid Protest Deadline, to the protesting bidder and any other bidder who has a reasonable prospect of receiving an award depending upon the outcome of the protest.

**10.6 Exclusive Remedy.** The procedure and time limits set forth in this section are mandatory and are the bidder's sole and exclusive remedy in the event of a bid protest. A bidder's failure to comply with these procedures will constitute a waiver of any right to further pursue a bid protest, including filing a Government Code Claim or initiation of legal proceedings.

**10.7 Right to Award.** The City Council reserves the right to award the Contract to the bidder it has determined to be the responsible bidder submitting the lowest responsive bid, and to issue a notice to proceed with the Contract notwithstanding any pending or continuing challenge to its determination.

# PROPOSAL

**TO: THE CITY OF REDLANDS, SAN BERNARDINO COUNTY, CALIFORNIA herein called the "City".**

Pursuant to and in compliance with your Notice Inviting Bids, and the other documents relating thereto, the undersigned Bidder, having familiarized themselves with the terms of the Contract, the local conditions affecting the performance of the Contract and the cost of the work at the place where the work is to be done, and with the plans thereto, hereby proposes and agrees to perform within the time stipulated, the Contract, including all of its component parts and everything required to be performed, and to provide and furnish any and all of the labor, materials, tools, equipment and all utility and transportation services necessary to perform the contract, and complete in a workmanlike manner, all of the work covered by the contract in connection with the City's Project identified as

**2025 ALLEY PAVING IMPROVEMENT PROJECT**
**PROJECT NO. 211014**

NOTE: Bidders must bid each item in this schedule. All entries in the entire PROPOSAL must be made clearly and in ink. Mistakes shall be lined through and the correct amount written above and initialed by the authorized agent of the Bidder.

## BID SCHEDULE

(See "Section 01200 – Measurement and Payment" for Bid Item description)

| Item No. | Brief Description | Estimated Quantity | Unit Price (If Applicable) | Total Price in Figures |
|---|---|---|---|---|
| 1 | Mobilization (Maximum 5% of Total Base Bid Price) | LUMP SUM | N/A | $_____ |
| 2 | Erosion Control | LUMP SUM | N/A | $_____ |
| 3 | Survey (Construction Stake) | LUMP SUM | N/A | $_____ |
| 4 | Removal of all trash and debris, shrubs, bushes, tree stumps, existing pavement, concrete, v-gutter, pavement grindings from right of way | LUMP SUM | N/A | $_____ |
| 5 | Construct 2.5" AC Over 4" Aggregate Base, Compact Top 6" to 95% Compaction | 36,907 SF | $_____/SF | $_____ |
| 6 | Construct 2' Wide V-Gutter | 2,527 LF | $_____/LF | $_____ |
| 7 | Construct V-Gutter Transition | 8 EA | $_____/EA | $_____ |

## BID SCHEDULE (CONTINUED)

(See "Section 01200 – Measurement and Payment" for Bid Item description)

| Item No. | Brief Description | Estimated Quantity | Unit Price (If Applicable) | Total Price in Figures |
|---|---|---|---|---|
| 8 | Remove and Replace Driveway, 6" Thick PCC (560-C-3250), Compact Top 6" to 95% Compaction | 1,405 SF | $_____/SF | $_____ |
| 9 | Remove and Replace Sidewalk, 6" Thick PCC (560-C-3250) | 570 SF | $_____/SF | $_____ |
| 10 | Washington Street – Sawcut 12"x 50' AC, Gravel Backfill & Redwood Headers | LUMP SUM | N/A | $_____ |
| 11 | Demobilization | LUMP SUM | N/A | $_____ |
| 12 | Unforeseen Work Not Covered Within All Other Bid Items | LUMP SUM | N/A | $_____50,000.00__ |
| | | | **BID SCHEDULE PRICE** | **$_____** |

Last Minute Additions/Deductions*_____ Bid Item No._____

Last Minute Additions/Deductions*_____ Bid Item No._____

Last Minute Additions/Deductions*_____ Bid Item No._____

**BID SCHEDULE TOTAL PRICE: $**_____

**BID SCHEDULE TOTAL PRICE WRITTEN IN WORDS:** _____

_____

_____

* Provision is made here for the Bidder to include an addition or deduction in its bid, if it wishes, to reflect any last-minute adjustments in prices. The addition or deduction, if made, will be proportionately applied to the Progress Payments total for the respective item in the Schedule of Prices, the amount being added or deducted for each monthly payment. The unit prices entered in the Schedule of Prices will not be affected.

**LOW BID DETERMINATION:**

The low bid will be determined pursuant to Public Contract Code Section 20103.8 as the lowest bid price on the Bid Schedule Total Price on page BD 11. A responsible bidder who submits the lowest bid as determined by the above method shall be awarded the contract, if it is awarded, by the City Council of the City of Redlands.

# ADDENDA

Receipt of the following addenda is hereby acknowledged and the same is included in the Bid Price:

Addendum #1_____ (initials)  Addendum #2_____ (initials)  Addendum #3_____ (initials)

Addendum #4_____ (initials)  Addendum #5_____ (initials)  Addendum #6_____ (initials)

ATTEST: (if Corporation)

(Corporation Seal)

| | |
|---|---|
| _____ | _____ |
| Company Name | Signature |
| _____ | _____ |
| Address | Name |
| _____ | _____ |
| City, State, Zip | Title |

# BID CERTIFICATION

The undersigned certifies that they are familiar with the various State and local laws affecting labor, length of working days, employer's liabilities, Sunday work, alien labor, domestic materials, Subcontractors, etc.

It is understood and agreed that the work under the contract will be commenced by the undersigned Bidder, if awarded the contract, within ten (10) calendar days from the date in the Notice to Proceed and will be completed by the Contractor in the time set forth in the **CONTRACT**.

Enclosed find Bidders bond or certified or cashier's check No. _____ on the _____ Bank, in the amount of _____ _____ which is not less than ten percent (10%) of the Bid submitted by the undersigned, made payable to the City of Redlands, California and which is given as a guarantee that the Bidder agrees that in case of their default in executing said contract with necessary bonds, the bond or check accompanying this Bid and the money made payable shall become and remain the property of the City of Redlands.

It is understood and agreed that the City of Redlands has the right to waive defects or irregularities and to accept or reject any or all Bids. No Bidder may withdraw their Bid for a period of sixty (60) days after the time of the Bid Opening except as allowed by the California Public Contract Code.

The following information, required by State law under penalty of perjury, is true and correct. Failure to complete this information renders the bid non-responsive, and the bid must be rejected.

| | |
|---|---|
| _____ | _____ |
| Company Name | Signature |
| _____ | _____ |
| Address | Signatory's Title |
| _____ | _____ |
| City, State, Zip | State License Number and Class |
| _____ | _____ |
| Telephone Number | License Expiration Date |

Dated this _____ day of _____, 20___.

# BID BOND

**KNOW ALL PERSONS BY THESE PRESENTS,**

That _____ as Principal, and _____ as Surety, are held and firmly bound unto the City of Redlands, hereinafter called City, in the sum of _____ dollars, for the payment of which sum well and truly to be made, we bind ourselves, our heirs, executors, administrators, successors, and assigns, jointly and severally, firmly by these presents.

**WHEREAS,** said Principal has submitted a bid to said City to perform all work required under the PROJECT NO. 211014.

**NOW, THEREFORE,** if said Principal is awarded a contract by said City and, within the time and in the manner required under the heading "Instructions to Bidders" bound with said Specifications, enters into a written contract on the form of agreement bound with said Specifications and furnishes the required bonds, one to guarantee faithful performance and the other to guarantee payment for labor and materials; then this obligations shall be null and void, otherwise it shall remain in full force and effect. In the event suit is brought upon this bond by said City and Judgment is recovered, said Surety shall pay all costs incurred by said City in such suit, including a reasonable attorney's fee to be fixed by the court.

**SIGNED AND SEALED,** this _____ day of _____, 20____.

_____**(SEAL)**
(Principal)

By:_____
(Signature)

_____**(SEAL)**
(Surety)

By:_____
(Signature)

Address:_____

_____

Telephone (___)_____

(Seal and Notarial Acknowledgment of Surety)

# STATEMENT BY BIDDER
# NON-COLLUSION AFFIDAVIT

STATE OF )
) ss
COUNTY OF )

_____, being first duly sworn, deposes and says that

he is
(Sole Owner, a Partner, President, Secretary, etc.)

of
(Contractor)

the party making the foregoing bid on PROJECT NO. 211014 that such bid is not made in the interest of or on behalf of any undisclosed person, partnership, company, association, organization, or corporation; that the bid is genuine and not collusive or sham; that the Bidder has not directly or indirectly induced or solicited any other Bidder to put in a false or sham bid, and has not directly or indirectly colluded, conspired, connived, or agreed with any Bidder or anyone else to put in a sham bid, or that anyone shall refrain from bidding; that the Bidder has not in any manner, directly or indirectly, sought by agreement, communication, or conference with anyone to fix the bid price of the Bidder or of any other Bidder or to fix any overhead, profit, or cost element of the bid price or of that of another bidder, or to secure any advantage against the public body awarding the Contract of anyone interested in the proposed contract; that all statements contained in such bid are true; and further, that the Bidder has not directly or indirectly, submitted his bid price or any breakdown thereof, or the contents thereof, or divulged information or data relative thereto, or paid, and will not pay, any fee to any corporation, partnership, company, association organization, bid depository, or to any member or agent thereof to effectuate a collusive or sham bid.

By: _____ Title: _____

Subscribed and sworn to before me this _____ day of _____, 20___.

Signature of Officer Administering Oath
*(Notary Public)*

## STATEMENT BY BIDDER
## OFFICERS OF CORPORATION (Members of Firm)

The names of all persons interested in the foregoing proposals as principals, are as follows: (IMPORTANT NOTICE - if Bidder or other interested person is a corporation, state legal name of corporation, also names of the president, secretary, treasurer and manager thereof; if a co-partnership, state true name of firm, also names of all individual co-partners composing firm; if Bidder or other interested person is an individual, state first and last names in full).

_____ _____

_____ _____

_____ _____

Licensed in accordance with an act providing for the Registration of Contractors, License

No. _____.

Signature of Bidder _____ Dated_____

**NOTE:** If Bidder is a corporation, the legal name of the corporation shall be set forth above, together with the signature of the officer(s) authorized to sign contracts on behalf of the corporation; if Bidder is a co-partnership, the true name of the firm shall be set forth above, together with the signature of the partner or partners authorized to sign contracts in behalf of the co-partnership, and if the Bidder is an individual, that signature shall be placed above.

## STATEMENT BY BIDDER
## SUB-CONTRACTORS LIST

Bidder supplies the following information for any Subcontractor who will perform work or labor or render services to the prime contractor, etc. to be used on PROJECT NO. 211014, all in accordance with Section 4104 of the California Public Contract Code.

| LICENSED SUBCONTRACTOR'S NAME AND BUSINESS ADDRESS | LICENSE # | SPECIFIC DESCRIPTION OF SUBCONTRACT & BID ITEM # | % OF BID ITEM TO BE PERFORMED |
|---|---|---|---|
| | | | |
| | | | |
| | | | |
| | | | |
| | | | |
| | | | |
| | | | |

## STATEMENT BY BIDDER
## QUALIFICATION AND EXPERIENCE STATEMENT

The following outline is a record of the undersigned Bidder's experience in construction of three (3) projects of a type similar in magnitude and character to that contemplated under PROJECT NO. 211014 within the past two years. Include the location of each project as well as the name, address, and phone number of the owner, and name of individual to contact.

Subcontractors performing in excess of one half of one percent of the prime Contractor's total bid, or in the construction of streets or highways, one half of one percent of the prime contractor's total bid or ten thousand dollars ($10,000), whichever is greater shall provide a similar outline. Additional pages outlining this portion of the Bid may be attached. Failure to provide this statement may result in rejection of the bid by the City of Redlands.

1. Owner's Name: _____

   Contact Person: _____ Phone: (  ) _____

   Address of Owner: _____

   Project Description: _____

   _____

   Amount of Contract: _____ Completion Date: _____

2. Owner's Name: _____

   Contact Person: _____ Phone: (  ) _____

   Address of Owner: _____

   Project Description: _____

   _____

   Amount of Contract: _____ Completion Date: _____

3. Owner's Name: _____

   Contact Person: _____ Phone: (  ) _____

   Address of Owner: _____

   Project Description: _____

   _____

   Amount of Contract: _____ Completion Date: _____

## STATEMENT BY BIDDER
## GENERAL INFORMATION

1. Bidder's Mailing Address _____

   _____

2. Number of years engaged in the contracting business under your present firm or trade name:

   _____

3. Have you ever failed to complete any work awarded to you? (Yes or No) _____. If yes, provide details in the space provided in Item 10.

4. Have you ever defaulted on a contract? (Yes or No) _____. If yes, provide details in the space provided in Item 10.

5. Have you ever been a party to a lawsuit or gone to arbitration during the last 5 years? (Yes or No) _____. If yes, provide details in the space provided in Item 10.

6. Has any Stop Notice been filed against you during the last 5 years? (Yes or No) ___. If yes, provide details in the space provided in Item 10.

7. Has your contractor's license ever been suspended, revoked, or subject to disciplinary action? (Yes or No) _____. If yes, provide details in the space provided in Item 10.

8. Contracts currently on hand:

| Agency Name | Amount of Contract | Start Date | Completion Date |
|---|---|---|---|
| | | | |
| | | | |
| | | | |
| | | | |
| | | | |
| | | | |

9. Enter the name of person(s) who inspected the site of the proposed work for your firm and the date of said site inspection.

   Name:_____ Date:_____

10. In the space provided, the Bidder shall provide details concerning any "Yes" answers provided in this "General Information" section. Details shall include, but not be limited to, the nature of dispute, name of the agency involved and the final outcome. If requested by the City, the Bidder shall supply additional information, sufficiently detailed, to permit evaluation of the Bidder's ability to perform the work.

| **Question Number** | Details |
| --- | --- |
| | |

# CONTRACT DOCUMENTS
# (CD)

THIS PAGE INTENTIONALLY LEFT BLANK

# PUBLIC WORKS CONSTRUCTION CONTRACT

This Public Work Construction contract ("Contract") is made and entered into this ___ day of _____, 2025, by and between the City of Redlands, a municipal corporation, organized and existing under the laws of the State of California (hereinafter "City"), and _____ (hereinafter "Contractor"). City and Contractor are sometimes individually referred to herein as a "Party" and, together, as the "Parties."

In consideration of the mutual promises contained herein, City and Contractor agree as follows:

1. **SCOPE OF WORK:** Contractor shall furnish all materials and will perform all of the work for the following: 2025 Alley Paving Improvement Project, complete all items as required by the Contract Documents (as herein defined) and Specifications for City's 2025 Alley Paving Improvement Project, Project No. 211014 (the "Work").

2. **CONTRACT SUM:** City shall pay Contractor the sum of _____ dollars ($_____) as consideration for its performance of the Work in accordance with the terms and conditions set forth in the Contract Documents. Pursuant to Public Contract Code Section 22300, Contractor has the option to deposit securities with an escrow agent as a substitute for retention of earnings required to be withheld by City pursuant to an escrow agreement as set forth in Public Contract Code section 22300.

3. **TIME FOR COMPLETION:** The Work shall be completed within forty-five (45) working day(s) as defined in Section 1-2 of the Standard Specifications for Public Works Construction "Greenbook" from and after the date of City's issuance of a Notice to Proceed to Contractor.

4. **LIQUIDATED DAMAGES:** Contractor's failure to complete the Work within the time allowed will result in damages being sustained by City. Such damages are, and will continue to be, impracticable and extremely difficult to determine. Accordingly, Contractor shall pay to City, or have withheld from monies due to Contractor, the sum of five hundred dollars ($500) for each working day as defined in Section 1-2 of the Standard Specifications for Public Works Construction "Greenbook" in excess of the specified time for completion of the Work. Execution of this Contract shall constitute agreement by City and Contractor that five hundred dollars ($500) per day is the estimated damage to City caused by the failure of Contractor to complete the work within the allowed time. Such sum is liquidated damages and shall not be construed as a penalty, and may be deducted from payments due Contractor if such delay occurs.

5. **CONTRACT DOCUMENTS:** This Contract incorporates by reference the following: Notice Inviting Bids, Instructions to Bidders, Contractor's Proposal, Bid Bond, Agreement, Performance Bond, Labor and Material Bond, Plans, General Conditions, Special Provisions and Specifications, and any addenda thereto (collectively, the "Contract Documents").

6. **ATTORNEYS' FEES:** In the event any action is commenced to enforce or interpret the terms or conditions of this Contract, or the Contract Documents, the prevailing Party in such action, in addition to any costs and other relief, shall be entitled to recover its reasonable attorneys' fees, including fees for use of in-house counsel by a Party.

7. **RESOLUTION OF CONSTRUCTION CLAIMS:** Claims by Contractor in the amount of three hundred seventy five thousand dollars ($375,000) or less shall be made by Contractor and processed by the City pursuant to the provisions of Part 3, Chapter 1, Article 1.5 of the Public Contract Code (commencing with Section 20104). All claims shall be in writing and include the documents necessary to substantiate the claim. Nothing in subdivision (a) of Public Contract Code Section 20104.2 shall extend the time limit or supersede the notice requirements provided in this case from filing claims by Contractor.

8. **ELIGIBILITY OF CONTRACTOR/SUBCONTRACTOR:** Contractor and all of its subcontractors shall abide by California Public Contract Code, Section 6109, and California Labor Code Sections 1777.1 and/or 1777.7, and certify that they are not debarred and are eligible to work on this project.

9. **ASSIGNMENT OF AGREEMENT:** No assignment by a Party of any rights or interests under this Contract shall be binding on another Party without the written consent of the Party sought to be bound.

10. **SUCCESSORS AND ASSIGNS:** City and Contractor each binds itself and their respective successors and assigns in respect to all covenants, agreements, and obligations contained in the Contract Documents.

11. **SEVERABILITY:** Any provision or part of the Contract Documents held to be void or unenforceable under any law or regulation shall be deemed stricken, and all remaining provisions shall continue to be valid and binding upon City and Contractor.

**IN WITNESS WHEREOF,** the Parties hereto have executed this Contract the day and year first written above.

CITY OF REDLANDS

**(SEAL)**

By:_____
Mario Saucedo, Mayor

ATTEST:

_____
Jeanne Donaldson, City Clerk

**(SEAL)**

_____
Name of Contractor

By:_____
Signature of Authorized Agent

_____
Title

_____
Signature of Authorized Agent (if necessary)

_____
Title

_____
Contractor's License No.

## WORKER'S COMPENSATION INSURANCE CERTIFICATION

Description of Contract: City of Redlands
Municipal Utilities and Engineering Department
2025 Alley Paving Improvement Project
Project No. 211014

Every employer, except the State, shall secure the payment of compensation in one or more of the following ways:

a. By being insured against liability to pay compensation by one or more insurers duly authorized to write compensation insurance in this State.
b. By securing from the Director of Industrial Relations, a certificate of consent to self-insure, either as an individual employer, or as one employer in a group of employers, which may be given upon furnishing proof satisfactory to the Director of Industrial Relations of ability to self-insure and to pay any compensation that may become due to his or her employees.

CHECK ONE

_____I am aware of the provisions of Section 3700 of the Labor Code which requires every employer to be insured against liability for Workers' Compensation or to undertake self-insurance in accordance with the provisions of that Code, and I will comply with such provisions before commencing the performance of the work and activities required or permitted under this Agreement. (Labor Code §1861).

_____I affirm that at all times, in performing the work and activities required or permitted under this Agreement, I shall not employ any person in any manner such that I become subject to the workers' compensation laws of California. However, at any time, if I employ any person such that I become subject to the workers' compensation laws of California, immediately I shall provide the City with a certificate of consent to self-insure, or a certification of workers' compensation insurance.

I certify under penalty of perjury under the laws of the State of California that the information and representations made in this certificate are true and correct.

Dated this _____ day of _____, 2025.

_____
(Contractor)

_____
(Signature)

_____
(Official Title)

(SEAL)

(Labor Code Section 1861 provides that the above certificate must be signed and filed by the Contractor with the Owner prior to performing the work of the contract.)

**FAITHFUL PERFORMANCE BOND**

Whereas, the City of Redlands ("City"), State of California, and _____ (hereinafter designated as "Principal") have entered into an agreement dated _____, 2025 ("Agreement") whereby Principal agrees to install and complete certain public improvements (the "Work"), which said Agreement is identified as 2025 Alley Paving Improvement Project, Project No. 211014 and is hereby referred to and made a part hereof; and

Whereas, said Principal is required under the terms of the Agreement to furnish a bond for the faithful performance of the Work, now, therefore, we, the Principal and, _____, as Surety, are held and firmly bound unto the City in the penal sum of _____ dollars ($_____) lawful money of the United States, for the payment of which sum we bind ourselves, and our heirs, successors, executors and administrators, jointly and severally, firmly by these presents.

The condition of this obligation is such that if the above bounded Principal, his or its heirs, executors, administrators, successors or assigns, shall in all things stand to and abide by, and well and truly keep and perform the covenants, conditions and provisions in the Agreement and any alteration thereof made as therein provided, on his or its part, to be kept and performed at the time and in the manner therein specified, and in all respects according to their true intent and meaning, and shall faithfully fulfill the one-year guarantee of all materials and workmanship, and shall defend, indemnify and save harmless the City and its elected officials, officers, agents and employees, as therein stipulated, then this obligation shall become null and void; otherwise it shall be and remain in full force and effect.

As a part of the obligation secured hereby and in addition to the face amount specified therefor, there shall be included costs and reasonable expenses and fees, including reasonable attorneys' fees, incurred by the City in successfully enforcing such obligations, all to be taxed as costs and included in the judgment rendered.

As a condition precedent to the satisfactory completion of the Work, the above obligation shall hold good for a period of one (1) year or longer if required by the Agreement after the acceptance of the work by the City, during which time if the Principal shall fail to make full, complete, and satisfactory repair and replacements and totally protect the City from loss or damage made evident during this period from the date of completion of the Work, and resulting from or caused by defective materials or faulty workmanship, the above obligation in penal sum thereof shall remain in full force and effect. The obligations of Surety hereunder shall continue so long as any obligation of the Principal remains.

Whenever the Principal shall be, and is declared by the City to be, in default under the Agreement, the City having performed the City obligations thereunder, the Surety shall promptly remedy the default, or shall promptly, at the City's option:

1. Complete the Work in accordance with its terms and conditions; or

2. Obtain a bid or bids for completing the Work in accordance with its terms and

conditions, and upon determination by Surety of the lowest responsive and responsible bidder, arrange for a contract between such bidder and the City, and make available as work progresses sufficient funds to pay the cost of completion of the Work less the balance of the Agreement price, but not exceeding, including other costs and damages for which Surety may be liable hereunder, the amount set forth above. The term "balance of the Agreement price," as used in this paragraph, shall mean the total amount payable to the Principal by the City under the Agreement and any modifications thereto, less the amount previously properly paid by the City to the Principal.

Surety expressly agrees that the City may reject any contractor or subcontractor which may be proposed by Surety in fulfillment of its obligations in the event of default by the Principal.

Surety shall not utilize the Principal in completing the Work nor shall Surety accept a bid from the Principal for completion of the Work if the City, when declaring the Principal in default, notifies Surety of the City's objection to the Principal's further participation in the completion of the Work.

No right of action shall accrue on the bond to or for the use of any person or corporation other than the City named herein or the successors or assigns of the City. Any suit under this bond must be instituted within the applicable statute of limitations period.

The said Surety, for value received, hereby stipulates and agrees that no change, extension of time, alteration or addition to the terms of the Agreement or to the work to be performed thereunder or the Specifications accompanying the same shall in any way affect its obligations on this bond, and it does hereby waive notice of any such change, extension of time, alteration or addition to the terms of the Agreement or to the work or to the specifications.

No final settlement between the City and the Principal shall abridge the right of any beneficiary hereunder whose claim may be unsatisfied.

The Principal and Surety agree that if the City is required to engage the services of any attorney in connection with the enforcement of this bond, each shall pay the City's reasonable attorneys' fees incurred, with or without suit, in addition to the above sum.

In witness whereof, this instrument has been duly executed by the Principal and Surety above named, on _____, 2025.

| | |
|---|---|
| (SEAL) | (SEAL) |
| _____ | _____ |
| (Contractor) | (Surety) |
| _____ | BY: _____ |
| (Signature) | (Signature) |
| | Address:_____ |
| | _____ |
| (Seal and Notarial Acknowledgment of Surety) | Telephone (  )_____ |

# LABOR AND MATERIAL BOND

Whereas, the City Council of the City of Redlands, State of California, and _____ (hereinafter designated as "Principal") have entered into an agreement (the "Agreement") whereby Principal agrees to install and complete certain designated public improvements (the "Work"), which said agreement, dated _____, 2025, and identified as 2025 Alley Paving Improvement Project, Project No. 211014 is hereby referred to and made a part hereof; and

Whereas, under the terms of the Agreement, Principal is required before commencing the performance of the Work, to file a good and sufficient Labor and Material bond with the City of Redlands to secure the claims to which reference is made in Title 3 (commencing with Section 9550) of Part 6 of Division 4 of the Civil Code of the State of California.

Now, therefore, said Principal and the undersigned as corporate surety, are held firmly bound unto the City and all contractors, subcontractors, laborers, material men and other persons employed in the performance of the Agreement and referred to in the aforesaid Code of Civil Procedure in the sum of _____ dollars ($_____) for materials furnished or labor thereon of any kind, or for amounts due under the Unemployment Insurance Act with respect to such work or labor, that said surety will pay the same in an amount not exceeding the amount hereinabove set forth, and also in case suit is brought upon this bond, will pay, in addition to the face amount thereof, costs and reasonable expenses and fees, including reasonable attorneys' fees, incurred by the City in successfully enforcing such obligation, to be awarded and fixed by the court, and to be taxed as costs and to be included in the judgment therein rendered.

It is hereby expressly stipulated and agreed that this bond shall insure to the benefit of any and all persons, companies and corporations entitled to file claims under Title 3 (commencing with Section 9550) of Part 6 of Division 4 of the Civil Code, so as to give a right of action to them or their assigns in any suit brought upon this bond.

Should the condition of this bond be fully performed, then this obligation shall become null and void, otherwise it shall be and remain in full force and effect.

The surety hereby stipulates and agrees that no change, extension of time, alteration or addition to the terms of the Agreement or the specifications accompanying the same shall in any manner affect its obligations on this bond, and it does hereby waive notice of any such change, extension of time, alteration or addition.

In witness whereof, this instrument has been duly executed by the Principal and surety above named, on _____, 2025.

(SEAL)

_____
(Contractor)

_____
(Signature)

(Seal and Notarial Acknowledgement of Surety)

(SEAL)

_____
(Surety)

BY: _____
(Signature)

Address:_____

_____

Telephone: (  )_____

THIS PAGE INTENTIONALLY LEFT BLANK

# GENERAL CONDITIONS
# (GC)

THIS PAGE INTENTIONALLY LEFT BLANK

# GENERAL CONDITIONS

The Standard Specifications for Public Works Constructions, 2021 Edition (Greenbook), together with supplements as published by Building News, Inc., are modified herein and comprise the Standard Specifications. For convenience, the section and subsection numbering system used in these modifications correspond to those used in the Greenbook. Unless specifically deleted or modified herein, all requirements of the Greenbook shall prevail.

## SECTION 1 – GENERAL, TERMS, DEFINITIONS, ABBREVIATIONS, UNITS OF MEASURE, AND SYMBOLS

### 1-2 TERMS AND DEFINITIONS.

**Agency** - *Amend as follows:*
"The legal entity (City) for which the Work is being performed."

**Bidder** - *Amend as follows:*
"Any individual, firm, partnership, corporation, or combination thereof, licensed in accordance with the provisions of Chapter 9, Division III of the Business and Professions Code, submitting a Bid for the Work, acting directly or through a duly authorized representative."

**City.** The City of Redlands, San Bernardino County, California, being the legal entity for which the Work is being performed. Also referred to as Agency or Owner.

**City Council.** The City Council of the City of Redlands, San Bernardino County, California, being the body authorizing entrance into legal agreements and allowing work in public right-of-way or on public property controlled by the City of Redlands. Also referred to as Board.

**Engineer** - *Amend as follows:*
"The City Engineer of the Agency, or other person designated by the City Engineer, acting either directly or through authorized agents."

**Fabricated.** An item specifically assembled or made out of selected materials to meet individual design requirements.

**Guarantee.** See Warranty.

**Laboratory.** The designated laboratory authorized by the City of Redlands to test materials and work involved in the Contract.

**Manufactured.** A standard mass-produced unit or item meeting design requirements.

**Owner.** The City of Redlands, San Bernardino County, California.

**Pavement.** The uppermost layer of material placed on the traveled way or shoulder. Also referred to as surfacing.

**Rain Day.** A scheduled working day when you cannot perform work on the controlling activity for at least 50 percent of the day with at least 50 percent of the normal labor and equipment due to adverse weather-related conditions that cause the Contractor to dismiss the crew.

**Street -** *Delete and replace with the following:*
"Any road, highway, parkway, freeway, avenue, street, lane, alley, crossing, intersection, court, place, circle, walk, way, or any public right-of-way within the jurisdiction of the Agency."

**Surety** - *Delete and replace with the following:*
"An admitted corporate surety as listed by the United States Department of Treasury and duly licensed to conduct business in the State of California and County of San Bernardino and acceptable to the City of Redlands, bound with and for the Contractor for the acceptable performance, execution, and completion of the Work, and for the satisfaction of all obligations incurred."

**Warranty.** An extended insurance by the Contractor, of any product or item of work installed as a part of this project for replacement and/or repair for the time period specified, including but not limited to, all parts, labor, materials, tools, equipment costs, etc. necessary for the product or item of work to be in proper and acceptable working condition after completion of the project. For the purposes of this Contract, the period of coverage shall begin on the date of the Notice of Completion filed by the Owner.

**Working Hours.** Unless specified otherwise, working hours shall be from 7:00 AM to 4:00 PM, Monday through Friday, inclusive. Saturdays, Sundays, and City Holidays, as shown on the current year Construction Schedule, are excluded unless authorized by the City.

**1-7.2 CONTRACT BONDS. -** *Add the following sentence to paragraph 1:*
The warranty provisions set forth in Section 7-18 shall be secured by the Contract Performance Bond required under this section and said Bond shall remain in full force and effect for a period of one year from the date of completion as specified in the Notice of Completion.

## SECTION 2 - SCOPE OF THE WORK

**2-2 PERMITS.** - *Amend the following:*

*Amend the first sentence of paragraph 1 as follows:*
"The Contractor will obtain all permits necessary to perform the work in streets, highways, railways or other rights-of-way."

*Add the following sentence between the first and second sentences of paragraph 1:*
For all work within Caltrans right-of-way, the Contractor shall obtain their own Caltrans Encroachment Permit and pay all necessary permit and inspection fees as required by Caltrans.

*Add the following paragraph:*
The Contractor shall, prior to the start of work, procure all permits and licenses, including but not limited to, a City Business License for itself, subcontractors, and all parties performing actions associated with this contract within the City of Redlands, City Truck Route Permit, City Street/Lane Closure Permit, City Encroachment Permit, USA Verification Number, DOSH Excavation Permit, other permits required by agencies and/or utilities having jurisdiction on the work, pay all charges and fees required by the City, other agencies and utilities, and give all notices necessary and incidental to the due and lawful prosecution of the work. All City permits associated with this project are no fee to the Contractor.

# SECTION 3 - CONTROL OF THE WORK

## 3-7 CONTRACT DOCUMENTS.

**3-7.1 General.** – *Add the following paragraphs:*
Contractor's working drawings or plans for any structure not included in the plans shall be approved by the Engineer before any work is performed. It is mutually agreed that approval by the Engineer of the Contractor's working plans does not relieve the Contractor of any responsibility for accuracy of dimensions and details, and that the Contractor shall be responsible for agreement and conformity of their working plans with the approved plans and specifications.

Finished surfaces in all cases shall conform with the lines, grades, cross sections, and dimensions shown on the approved plans. Deviations from the approved plans will be determined by the Engineer and approved in writing. In the event of a discrepancy between any drawing and the figures written thereon, the figures shall be taken as correct.

Should it appear that the work to be done or any matter thereto is not sufficiently detailed or explained by the plans and specification, the Contractor shall apply to the Engineer for such further explanation as may be necessary and shall conform to such explanation or interpretation as part of the Contract so far as may be consistent with the intent of the original plans and specifications.

**3-7.1.1 Preconstruction Meeting.** The Contractor to whom the contract is awarded, and all his major subcontractors, shall attend a pre-construction meeting. The time and location of said meeting will be set by the City. Contractor will be given adequate notice of such meeting. It shall be the Contractor's responsibility to notify his subcontractors of the time and location of the meeting. All submittals as required under the General Requirements shall be submitted by the Contractor at the time of the meeting.

The Contractor will be provided with an electronic (.PDF file) of the conformed plans and specifications for their use throughout the project. Contractor is responsible for all costs of reproduction.

Progress meetings will be scheduled by the City. The Contractor will be given at least five working days notice of the time and location of said meetings. The Contractor has the responsibility of notifying his subcontractors, suppliers, and fabricators of the time and location of said meetings. Meetings will be held either at the job site, at the offices of the City of Redlands, or at any other

location approved by the City. The Contractor may request, in writing, that a meeting be held. The City will schedule a meeting at the Contractor's request not more than five working days after receiving said written notice.

**3-7.2 Precedence of Contract Documents.** – *Replace paragraph 2 with the following:*
The precedence shall be (A. being highest, O. being lowest):

A. Permits from other Agencies as may be required by law.
B. Change Orders.
C. Contract.
D. Addenda.
E. Bid Schedule/Proposal.
F. General Requirements.
G. Technical Specifications.
H. Plans.
I. MUED General Permit Conditions and Trench Specifications.
J. City of Redlands Water & Sewer Systems Standard Specifications.
K. General Conditions.
L. City of Redlands Standard Specifications and Detail Drawings for Design and Construction of Public Improvements and all Supplements
M. Standard Specifications for Public Works Construction (SSPWC), 2018 Edition
N. Standard Plans for Public Works Construction, 2012 Edition
O. Reference Specifications.

**3-8.7 Record Drawings.** The Contractor shall maintain at the job site, a set of record drawings for the work showing: exact location information of all existing underground utilities encountered, final locations determined in the field, any deviations from the plans and specifications and new work performed within the work area; and all differences between the work as drawn and as installed for all concealed work as well as work added which is not shown on the drawings. Concealed work shall mean all work installed underground or in an area which cannot be readily inspected by use of access panels, inspection plates or other removable features. When vacuum excavation (potholing) services are required, contractor to provide report that identifies depth and alignment of underground utilities.

These record drawings shall be kept current and legible, and shall be available for inspection at all times by the Engineer, Architect and Contractor. All information, changes in the work or work added on these record drawings shall be marked in red. All markings shall use the same legends that are used on the drawings. Indicate locations by exact dimensions and elevations. Give dimensions and elevations from a permanent reference point and prepare all changes to scale.

At the end of construction, the contractor shall prepare one set of marked-up prints of the record drawings indicating any and all revisions and changes to the drawings reflecting As-Built conditions. The drawings shall also contain a listing of all subcontractors who worked on the construction project. The As-Built drawings will be submitted to the Municipal Utilities and Engineering Department for review and approval by the City Inspector and Engineer.
The design engineer or City staff shall prepare the final As-Built drawings for record purposes in one of the following two ways: (1) Check out the original drawings from the City and manually revise the

drawings to reflect the As-Built condition; or (2) Re-plot the original drawings electronically on 4 mil mylars and make revisions electronically to reflect the As-Built conditions. The final As-Built drawings will be reviewed and approved by the City Inspector and Engineer

The construction related bonds will not be released by the City until the As-Built drawings are accepted by the Engineer and all City stipulated conditions for the release of the bonds have been satisfied.

## 3-10 SURVEYING.

**3-10.3 Line and Grade. -** *Add the following sentences to paragraph 1:*
All distances and measurements shown are and will be made in a horizontal plane. Construction line and grade staking shall be set at maximum intervals of 25 feet when the grade is 0.50 percent or greater. Construction line and grade staking shall be set at maximum intervals of 12 feet when the grade is less than 0.50 percent.

**3-10.4 Permanent Survey Markers.**
The Registered (licensed) Land Surveyor or Registered Civil Engineer authorized to practice land surveying in accordance with all provisions of Section 8771 of the Business and Profession Code shall be hired as a subcontractor or employed by the Contractor.

**3-10.5 Survey Service.**
Contractor shall be responsible for: furnishing all surveying and staking, horizontal and vertical, as shown on the plans and in accordance with the specifications; furnishing all staking for sub-grade and base course grades per typical sections; replacing any existing monuments and ties which have been destroyed by construction; identifying, locating and tying out all monuments and ties necessary within the work area; and shall reinstall all disturbed monuments and ties, supplying the Engineer with copies of monument and tie sheets recorded with the County Surveyor in accordance with applicable State law. Monuments shall be approved by the Engineer.

Surveying and staking shall be done by a Registered (licensed) Land Surveyor or Registered Civil Engineer authorized to practice land surveying in accordance with all provisions of Section 8771 of the Business and Professions Code.

Unless otherwise specified, stakes will be set and stationed by the Contractor's surveyor for curbs, headers, sewers, storm drains, structures, rough grade and all other staking necessary for the construction of the work. A corresponding cut or fill to finished grade (or flowline) will be indicated on a grade sheet to be supplied to the Engineer. The Contractor shall dig all holes necessary for line and grade stakes.

## 3-13 COMPLETION, ACCEPTANCE, AND WARRANTY.

**3-13.2 Acceptance.** - *Add the following paragraphs:*
The Contractor shall submit written assertion that the work has been completed prior to the Engineer making final inspection. The Engineer will have 48 hours to inspect the work. If the Engineer determines that the work is not complete, written notice will be given.

Until final acceptance of work by the Engineer, the Contractor shall have charge and care thereof from damage caused by the action of the elements or from any other cause, whether arising from the execution or from the non-execution of the work. The Contractor shall rebuild, repair, restore, and make good all injuries or damage to any portion of the work occasioned by any of the above causes before final acceptance and shall bear the expense thereof.

All work which has been rejected shall be remedied or removed and replaced by the Contractor at their expense with work conforming to the plans and specifications. Any defective material or workmanship which may be discovered before final acceptance or within one year from the date of final acceptance shall be immediately corrected by the Contractor at their expense, notwithstanding that it may have been overlooked in previous inspections and estimates. Failure to inspect work at any stage shall not relieve the Contractor from any obligation to perform sound and reliable work as herein described. It is the Contractor's ultimate responsibility to deliver a complete, operational project that complies in all details with these specifications, at the time of final acceptance.

Any omission or failure on the part of the City to discover or notify the Contractor of or to condemn defective work or material at the time of construction shall not be deemed as acceptance, and the Contractor will be required to correct defective work or material prior to final acceptance.

The City will endeavor to locate any errors or defective materials or workmanship and call them to the attention of the Contractor prior to subsequent work being performed. However, the City is under no obligation to do so and shall not be held liable because errors or defective material or workmanship by the Contractor are not discovered prior to subsequent work.

Nothing in this section shall be construed to limit the rights of the City to immediately correct conditions which are unsafe or which pose a public health nuisance. Should said corrections later be found to be caused by defective material and/or workmanship, the Contractor and their surety shall reimburse the City for costs reasonably incurred while attending the situation.

In the event it is necessary for the City to file suit to enforce any liability of the Contractor pursuant to this Section, the City shall be entitled to recover from the Contractor, in addition to all other amounts found due and owing, costs of suit and reasonable expenses and fees including reasonable attorneys' fees incurred by the City in successfully enforcing the Contractor's obligation, all to be taxed as costs and included in any judgment rendered.

**3-13.3 Warranty. -** *Amend the following:*

*Amend the first sentence of the paragraph 3:*
"The warranty period for specific items covered under manufacturers' or suppliers' warranties shall commence from the date of the final acceptance, except where longer warranty periods are specified."

*Add the following paragraphs:*
All start-up and testing shall be complete, approved and accepted before final acceptance, substantial completion, or beneficial occupancy.

The warranty provided herein shall not be in lieu of, but shall be in addition to any warranties or other obligations otherwise imposed by the specifications or by law. The remedies provided herein shall not be exclusive and the City shall be entitled to any and all remedies provided by law.

**3-14 INSPECTION.**

The Contractor shall notify the Engineer at least 24 hours in advance before inspection is required. Whenever the Contractor varies the period during which work is carried on each day, due notice shall be given to the Engineer so that proper inspection may be provided. Varied working hours may be allowed only upon written authorization from the Engineer.

Work financed in whole or in part with funds from another public entity or performed within the jurisdiction of another public entity shall be subject to inspection at all times by authorized representatives of that entity.

The work shall be ready for inspection, whether by City, other public entities or independent testing laboratories, at the scheduled times arranged by the Contractor. If, in the City's sole judgment, the work is not ready and the inspection must be rescheduled, the Contractor shall be notified. The Contractor shall reschedule the inspection and provide the proper 24 hour notification for the rescheduled inspection. Any costs incurred by the City for rescheduled inspections shall be reimbursed prior to the release of Bonds.

In order to allow for inspection, the Contractor shall notify the City's inspector sufficiently in advance of the permanent concealment of any materials or work. The City's inspector shall make the appropriate notifications to other public entities and independent testing laboratories for inspections. All inspections required in the specifications for this project shall be coordinated through the City's inspector.

If any work is concealed or performed without the prior notice specified, the work shall be subject to such tests or exposure as may be necessary to prove to the City, Architect and Engineer, that the materials used and the work performed are in conformity with the drawings and specifications. All labor, tools, materials and equipment necessary for exposing and testing shall be furnished by the Contractor at their expense. The Contractor shall replace at their expense, any materials or work damaged by exposure or testing.

Overtime inspection may be requested by the Contractor. Overtime inspection includes but is not limited to, any hours worked outside of the inspector's normal working hours including weekends and holidays. Such requests shall be on a case-by-case basis as determined by the Engineer. If the Engineer so determines and approves, overtime inspection shall be paid for by the Contractor at the current City billing rate at the time of request or as billed by other public entities or independent testing laboratories. Any costs incurred by the City for overtime inspection shall be reimbursed prior to the release of Bonds.

## SECTION 4 - CONTROL OF MATERIALS

**4-1 GENERAL. -** *Delete and replace with the following:*

Should any work performed or material furnished under the Contract prove defective or not in accordance with the Plans and Specifications and in the opinion of the Engineer such defect is not of sufficient magnitude or importance to make the work dangerous or unusable, or if the removal of such work is impracticable or will create dangerous or undesirable conditions, the Engineer at his discretion shall have the right and authority to retain such work instead of requiring it to be removed and reconstructed, but he shall make such deductions therefore in the payment due the Contractor as may be just and reasonable.

**4-1.1 Warranty of Title.** No materials, supplies or equipment for the work under this Contract shall be purchased subject to any chattel mortgage or under a conditional sale contract or other agreement by which an interest therein or any part thereof is retained by the seller or supplier. The Contractor warrants clear and good title to all materials supplied and equipment installed and incorporated in the work and agrees, upon completion of all work, to deliver the premises, together with all improvements and appurtenances constructed or placed thereon by him, to the Owner free from any claims, liens, encumbrances or charges, and further agrees that neither he nor any person, firm, or corporation furnishing any material or labor for work covered by the Contract shall have any right to a lien upon the premises or any improvement or appurtenance thereon, provided that this shall not preclude the Contractor from installing metering devices or other equipment of utility companies the title of which is commonly retained by the utility company. Nothing contained in this article, however, shall defeat or impair the right of such persons furnishing materials or labor under any bond given by the Contractor for their protection, or any right under any law permitting such persons to look to funds due the Contractor, which are in the hands of the Owner.

**4-1.2 Clayton Act.** In submitting a bid to the City, if the bid is accepted the Contractor agrees it will assign to the City all causes of action it may have under Section 4 of the Clayton Act (15 U.S.C. Section 15) or under the Cartwright Act (chapter 2 [commencing with Section 16700] of Part 2 Division 7 of the Business and Professionals Code), arising from purchases of goods, materials, or services by the Bidder for sale to the City pursuant to the bid. Such assignment shall be made and become effective at the time the City tenders final payment to the Bidder.

## SECTION 5 – LEGAL RELATIONS AND RESPONSIBILITES

### 5-1.1 CONTRACTOR'S EQUIPMENT AND FACILITIES.

A noise level limit of 86 dbA at a distance of 15 m (50 feet) shall apply to all construction equipment on or related to the work whether owned by the Contractor or not. The use of excessively loud warning signals shall be avoided, except in those cases required for the protection of personnel.

**5-1.2 General.**
The enclosed toilets required by this section shall be located within an approved yard, if one is acquired by the Contractor. If a yard is not acquired by the Contractor or the project is not within a City owned property, the toilets must be installed on a trailer and removed from the jobsite each day. At no times shall toilets be stored within the public right of way outside of working hours.

**5-3 LABOR. -** *Amend the following:*

**5-3.1 General.** - *Add the following paragraphs:*
Employment of apprentices are required on projects of $30,000 or more. Provisions in Sections 1777.5 of the California Labor Code fixes responsibility of compliance with that section for all apprenticeable occupations with the Contractor. Section 1777.5 provides that the Contractor and every Subcontractor shall submit contract award information to the applicable joint apprenticeship committee. One apprentice hour for every five journeymen hours worked is the minimum State requirement applicable to each apprenticeable trade. Section 1777.7 of said Labor Code provides that the Contractor shall forfeit as a civil penalty the sum of one hundred dollars ($100.00) for each calendar day of noncompliance with provision of said Section 1777.5.

The Contractor will observe all applicable health and safety requirements, including, but not limited to the California and Federal Occupational Safety and Health Acts. The Contractor shall submit for review by the City a Site Specific Health and Safety Plan prior to the commencement of construction activities. This Plan shall meet or exceed the requirements of 29 CFR 1910.120.

**5-3.2 Prevailing Wages.** - *Add the following paragraphs:*
Contractors are hereby notified that pursuant to Section 1770 of the Labor Code of the State of California, the City Council of the City of Redlands, California, by Resolution No. 2326, has ascertained the general prevailing rate of hourly wages and rates for legal holidays and overtime work in the locality where this work is to be performed, for each craft or type of workman or mechanic needed to execute the Contract which will be awarded to the successful Bidder. The Contractor shall comply with Sections 1770 to 1780 inclusive of the Labor Code and Master Labor Agreement of Southern California.

The Contractor and each of his subcontractors shall pay each of his employees engaged in work on the project under this Contract in full less legally required deductions and also deductions made pursuant to the regulations prescribed under the so-called "Kick- Back Statute" (48 Sta. 948; U.S.C. 875; 40 U.S.C. 276c).

In accordance with Section 1775 of the California Labor code, Contractor shall forfeit to City, as a penalty, a minimum of $40 for each day, or portion thereof, and a maximum of $200 for each day, or portion thereof, for each worker paid, either by Contractor, or any subcontractor, less than the prevailing rates as determined by the Director of the California Department of Industrial Relations for the work.

Contractor further agrees to fully comply with all applicable provisions of the California Labor Code including but not limited to Sections 1771, 1775, 1776, 1777.5, 1813 and 1815. Failure to abide by prevailing wages and laws by Contractor will be enforced.

The Contractor or subcontractor shall, as a penalty, to the State or political subdivision on whose behalf the contract is made or awarded forfeit twenty-five ($25) dollars for each worker employed in the execution of the contract by the respective contractor or subcontractor for each calendar day during which the worker is required or permitted to work more than 8 hours in any calendar day and 40 hours in any calendar work in violation of Labor Code section 1813.

**5-3.3 Payroll Records.** – *Delete and replace with the following*:

The contractor and subcontractors shall submit electronic certified payroll on a weekly basis to the City of Redlands through LCPtracker. LCPtracker is a web-based labor compliance management system. The Prime Contractor and Subcontractors and lower-tier Subcontractors will receive an email from LCPtracker providing their log-on identification and temporary password. The Contractors will need to follow the instructions in the email to set-up their permanent password and activate their account. Once their account is setup, LCPtracker Inc. provides either computer based or web based training. Training can be accessed via the "Book Now" button located under the "Projects" tab. The prime contractor shall submit their certified payroll, along with any subcontractor who is performing any labor, on a weekly basis. The prime contractor is responsible for all communication with their subcontractors and shall submit their subcontractor's certified payroll as part of their weekly payroll packet. All labor compliance correspondence and submissions will be made through the LCPtracker software.

All certified payroll shall be submitted no later than 7 days from the close of the pay period. The payroll records shall set out accurately and completely the name, social security number, classification and hourly wage rate of each employee, hours worked by employee during the payroll period and a full weekly wages and the actual weekly wages paid to the employee. Such certified payroll records shall be made available at all time for inspection by the City, the Department of Industrial Relations, the Department of Labor or authorized representatives within ten days of request. The contractor and subcontractor shall preserve weekly payroll records for a period of three (3) years from the date of completion of the Contract. In case on noncompliance with said Section 1776 and after a ten-day period following receipt of written notice, the Contractor shall forfeit to the California Department of Industrial Relations one hundred dollars ($100.00) for each calendar day or portion thereof, for each worker in non-compliance, until compliance is effectuated.

In order to meet labor compliance requirements, all contractors will be required to complete eDocuments which are accessed, submitted and approved through LCPtracker. All eDocuments are required to be signed by an owner/officer or authorized signer. The Prime Contractor and each Subcontractor and every lower-tier Subcontractor and any Vendors subject to this provision shall comply with Title 8, Section 16404 of the California Code of Regulations.

A Fringe Benefit Statement shall be submitted with the first payroll and is required for both the prime contractor and any subcontractors. A new Fringe Benefit Statement will be required when general determinations are issued in February and August. Please refer to the DIR website for additional details. Any weeks where no work was performed must be represented by the submittal of a Statement of Non-Performance covering the 7 day pay period where no hours were worked on the site. Final payroll on the project should state "Final" on the certified payroll, and must be marked as such in the LCPtracker system.

Failure by the Contractor to comply with the aforementioned requirements shall result in withheld progress payments until such time certified payroll documents have been received, reviewed, and accepted by the City. The City reserves the right to seek assistance from the State Department of Industrial Relations in determining the acceptability of certified payroll submittals before release of withheld progress payments. Prior to the release of retention monies, all certified payroll must be submitted on the project and any outstanding issues that may have occurred throughout the project must be resolved.

**5-4 INSURANCE.** - *Delete Section 5-4.1, Section 5-4.2 and replace with the following:*
Before entering into a Contract, the Bidder to whom the Contract has been awarded shall furnish satisfactory evidence that they have secured all required insurance from a responsible insurance company authorized to do business in California and satisfactory to the City, and such insurance shall be maintained in full force and effect at the Contractor's own expense during the life of the Contract. Contractor shall furnish the City with the customary Certificates of Insurance for all required insurance listed below. General Liability Insurance shall name the City and the Consultant, as an additional insured and shall be primary and non-contributing to any insurance or self-insurance maintained by the City. All liability insurance policies shall bear an endorsement or shall have attached a rider whereby it is provided that, in the event of expiration or proposed cancellation of such policies for any reason whatsoever, the City shall be notified by registered mail, return receipt requested, giving sufficient time before the date thereof to comply with any applicable law or statute, but in no event less than forty five (45) days before expiration or cancellation is effective.

The coverage shall provide the following minimum limits based on the type of work proposed under this Contract. The Contractor shall determine if the proposed work requires Tier 1 or Tier 2 Designated Insurance Requirements shown below.

| CONTRACTED OPERATIONS DESIGNATED AS TIER 1 | | |
|---|---|---|
| Air Conditioning (HVAC) Systems (installation) | Electric Light or Power Line Construction | Pipeline Construction |
| Airport Runways (paving, repaving, etc.) | Elevator Work | Roofing |
| Blasting Operations | Excavation | Sandblasting |
| Bridge or Elevated Highway Construction | Fire Suppression Systems (installation) | Sewer and Water Main Construction |
| Buildings Structural Work (including elevators) | Gas Mains or Connections Construction | Sign Erection (streets) |
| Building Structure (raising or moving) | Geophysical Exploration | Solar Energy |
| Cable Installation in Conduits and Conduit Construction (streets) | Grading of Land | Street Cleaning |
| Caisson or Cofferdam Work | Hazardous Materials Contractors | Street or Road Construction |
| Dam or Reservoir Construction | Irrigation or Drainage Construction | Tank Construction, Installation, Erection or Repair |
| Demolition (structures) | Landscape Construction (street or street medians) | Telephone or Cable Line Construction |
| Drilling | Painting (exterior greater than single story) | Tree Pruning, Dusting, Spraying or Removal |

**TIER 1 DESIGNATED INSURANCE REQUIREMENTS**

a. Commercial General Liability
   - $1 Million Per Occurrence/ $2 Million Aggregate
     - City listed as an Additional Insured on the coverage
     - Coverage is primary and non-contributory

- If scope of work is within 50 feet of any railroad, endorsement citing inclusion of liability associated with this work is required
- If any policy forms of endorsements are cited to grant extension of coverage, they must be included with the Certificate of Insurance submission

b. Business Auto Liability
- $1 Million Combined Single Limit
  - City listed as an Additional Insured on the coverage
  - Must include liability arising from all owned, leased, hired, and non-owned autos
  - If any policy forms of endorsements are cited to grant extension of coverage, they must be included with the Certificate of Insurance submission
- If Contractor or its subcontractors or suppliers haul hazardous material (including, without limitation, waste), Auto Liability insurance must be applicable to all hazardous waste hauling vehicles, and include MCS 90 and CA9948 Endorsements.

c. Commercial Umbrella/ Excess Liability
- $5 Million Per Occurrence/ Aggregate
  - City listed as an Additional Insured on the coverage
  - Coverage is primary and non-contributory
  - If any policy forms of endorsements are cited to grant extension of coverage, they must be included with the Certificate of Insurance submission

d. Workers Compensation
- $1 Million Per Occurrence for Bodily Injury by Accident
- $1 Million Each Employee for Bodily Injury by Disease
- $1 Million Policy Limit for Bodily Injury by Accident
  - Waiver of Subrogation in favor of City
  - If any policy forms of endorsements are cited to grant extension of coverage, they must be included with the Certificate of Insurance submission

e. Pollution Policy (Hazardous Materials) [If Applicable]
- Required of Projects that involve Demolition and/or Excavation Activities
- $1 Million Per Occurrence/ $2 Million Aggregate
- City listed as an Additional Insured on the coverage

| CONTRACTED OPERATIONS DESIGNATED AS TIER 2 | | |
|---|---|---|
| Air Conditioning (HVAC) Systems (service and repair) | Carpentry (building interiors) | Fire Suppression Systems (service and repair) |
| Alarms and Alarm Systems | Communications Equipment Installation (interior) | Landscape Construction |
| Building Interior Work (service, repair and non-structural remodeling) | Driveway, Parking Area or Sidewalk (paving or repaving) | Painting (exterior) |
| Cable Installation in Conduits (buildings) | Fence Erection | All Other Job Types including Vendors |

## TIER 2 DESIGNATED INSURANCE REQUIREMENTS

a. Commercial General Liability
   - $1 Million Per Occurrence/ $2 Million Aggregate
     - City listed as an Additional Insured on the coverage
     - Coverage is primary and non-contributory
     - If scope of work is within 50 feet of any railroad, endorsement citing inclusion of liability associated with this work is required
     - If any policy forms of endorsements are cited to grant extension of coverage, they must be included with the Certificate of Insurance submission

b. Business Auto Liability
   - $1 Million Combined Single Limit
     - City listed as an Additional Insured on the coverage
     - Must include liability arising from all owned, leased, hired, and non-owned autos
     - If any policy forms of endorsements are cited to grant extension of coverage, they must be included with the Certificate of Insurance submission
   - If Contractor or its subcontractors or suppliers haul hazardous material (including, without limitation, waste), Auto Liability insurance must be applicable to all hazardous waste hauling vehicles, and include MCS 90 and CA9948 Endorsements.

c. Workers Compensation
   - $1 Million Per Occurrence for Bodily Injury by Accident
   - $1 Million Each Employee for Bodily Injury by Disease
   - $1 Million Policy Limit for Bodily Injury by Accident
     - Waiver of Subrogation in favor of City
     - If any policy forms of endorsements are cited to grant extension of coverage, they must be included with the Certificate of Insurance submission

d. Pollution Policy (Hazardous Materials) [If Applicable]
   - Required of Projects that involve Demolition and/or Excavation Activities
   - $1 Million Per Occurrence/ $2 Million Aggregate
   - City listed as an Additional Insured on the coverage

Contractor expressly waives all rights to subrogation against the City, its officers, employees and volunteers for losses arising from work performed by Contractor for City by expressly waiving Contractor's immunity for injuries to Contractor's employees and agrees that the obligation to indemnify, defend and hold harmless provided for in this Agreement extend to any claim brought by or on behalf of any employee of Contractor. This waiver is mutually negotiated by the parties. This shall not apply to any damage resulting from the sole negligence of City, its agents and employees. To the extent any of the damages referenced herein were caused by or resulted from the concurrent negligence of City, its agents or employees, the obligations provided herein to indemnify, defend and hold harmless are valid and enforceable only to the extent of the negligence of contractor, its officers, agents and employees.

Subcontractors. The prime contractor shall include all subcontractors as insureds under its policies or shall furnish separate certificates and endorsements from each subcontractor.

The Contractor shall not assign or sublet the contract, in whole or in part, without the written consent of the City, nor shall the contractor assign any monies due to, or to become due to, Contractor hereunder without prior written consent of the City.

The Contractor shall be fully responsible to the City for the acts and omissions of the subcontractor and persons either directly or indirectly employed by the Contractor. Consent to subcontracting part of the work shall, in no way, release the Contractor from responsibility for performance of the work, and Contractor will be held, in all respects, accountable for the same as if no consent had been given. The Contractor shall give personal attention to this work which is sublet. Nothing contained in the contract documents shall create any contractual relation between any subcontractor and the City.

Hold Harmless and Indemnification. Contractor shall indemnify, hold harmless and defend City and its elected officials, agents and employees and the Consultant from and against any and all claims, losses or liability, including attorney's fees, arising from injury or death to persons or damage to property occasioned by any act, omission or failure to act of Contractor, its subcontractors, and any officers, agents and employees in performing the work required by this Agreement. Contractor's obligations under this provision shall not be limited in any way by any terms of this Agreement, or the insurance limits.

**5-4.3 Worker's Compensation Insurance.** - *Delete and replace with the following:*

A. Contractor shall have worker's compensation and employer's liability insurance in force throughout the duration of the contract in an amount which meets the statutory requirement with an insurance carrier acceptable to the City. The insurance policy shall include a provision prohibiting cancellation of said policy except upon forty-five (45) days prior written notice to City. Certificates of Insurance shall be delivered to the City at the time of the Contractors' execution of the agreement.

B. Contractor expressly waives all rights to subrogation against the City, its officers, employees and volunteers for losses arising from work performed by Contractor for City by expressly waiving Contractor's immunity for injuries to Contractor's employees and agrees that the obligation to indemnify, defend and hold harmless provided for in this Agreement extend to any claim brought by or on behalf of any employee of Contractor. This waiver is mutually negotiated by the parties. This shall not apply to any damage resulting from the sole negligence of City, its agents and employees. To the extent any of the damages referenced herein were caused by or resulted from the concurrent negligence of City, its agents or employees, the obligations provided herein to indemnify, defend and hold harmless are valid and enforceable only to the extent of the negligence of contractor, its officers, agents and employees.

**5-6 PATENT FEES OR ROYALTIES.** *Delete and replace with the following:*
The Contractor shall include in its Bid the patent fees or royalties on any patented article or process which may be furnished or used in the Work. The Contractor shall indemnify and hold the City

harmless from any legal action that may be brought for infringement of patents. The Contractor's attention is directed to "Notice of Patents, Data, and Copyright Regulations" of the Federal Labor Standards.

The Contractor shall bear all costs arising from the use of patented goods and/or processes used on and/or incorporated into the Work. When use of these goods and/or processes is judged to be an infringement and the use is banned, the Contractor, at its own expense, shall, with concurrence of the Engineer, do one of the following:

A. Secure for the City the right to continue using goods and/or processes by suspension of the injunction or by procuring a license(s);

B. Replace said goods and/or processes with non-infringing goods and/or processes;

C. Modify said goods and/or processes so that they become non-infringing; or

D. Remove said goods and/or processes and refund the sum paid therefore without prejudice to any other rights of the City.

The preceding shall not apply to any goods manufactured to the detailed design of the City contained in the Contract Documents.

**5-7 SAFETY.**

**5-7.1 Work Site Safety.**

**5-7.1.1 General.** - *Amend the following:*

*Add the following sentences to paragraph 1:*
Should watering be the sole method utilized for roadway dust abatement purposes, the maximum time interval that shall elapse between applications thereof shall be no greater than 3 hours during normal working day, supplemented by an additional application thereof immediately prior to the conclusion of the workday and at such other times as may be required, including evenings, weekends and holidays as required by the Engineer. Should the Contractor be unable to furnish dust abatement as specified, the City may perform or cause to be performed the necessary service, the expense of which will be deducted from the payment due the Contractor.

*Add the following paragraphs:*
To insure the protection of storm drain inlets, Best Management Practices (BMPs) shall be employed during cleanup and dust control operations. Refer to Section 7-8.6.

Compliance with this section is of extreme importance to the City and its citizens. The City may fine the Contractor $1,000 per incident if there are issues with dust, mud, unused equipment or materials and rubbish within the construction area that result in citizen complaints. A 24 hour notice shall be issued to the Contractor and failure to correct the problems will result in the fine being levied. This fine will be in addition to those fines potentially charged for NPDES violations.

## 5-8 AIR POLLUTION CONTROL.

Dust control shall be performed in accordance with Subsection 7-8 of the Standard Specifications, South Coast Air Quality Management District (SCAQMD) Rule 403, the general Provisions and the following Provision.

Dust resulting from the Contractor's performance of the work, either inside or outside, the right-of-way shall be controlled by the Contractor. Dust control includes the action necessary to prevent, reduce or control dust within the work area as required to complete the work. The Contractor shall carry out proper and efficient measures to prevent his operations from producing dust in amounts damaging to property or causing a nuisance, or harm to persons living nearby or occupying buildings in the vicinity of the work. The Contractor shall control dust 24 hours a day, seven days a week. The methods to be used for controlling dust in the construction area and along haul roads shall be approved by the Engineer prior to starting any work. The Rule 403 Implementation Handbook published by the SCAQMD, contains a detailed listing of reasonably available dust control measures.

Dust control ordered by the Engineer to be applied on Saturdays, Sundays or holidays will be included in the Contract price for dust control and no additional compensation will be allowed therefore.

The full compensation for all direct and indirect costs incurred for work performed or materials used to control dust resulting from the Contractor's performance of the work and caused by public traffic, either inside or outside the right-of-way shall be considered as included in the Contract prices paid for the various items of work involved and no additional compensation will be allowed therefore.

## 5-9 STORAGE OF EQUIPMENT AND MATERIALS.

The Contractor shall be required to provide and maintain as necessary, any additional property required for storage of equipment, materials, etc., to perform work on this project. Should the additional property be located within the city limits of the City of Redlands, the Contractor shall obtain written approval from the City of Redlands Development Services Department and comply with all conditions set therein prior to use. When private property is used for a yard area, the Contractor shall also secure written authorization from the private property owner and supply a copy of such to the City before any monthly progress payment is submitted. Contractor to propose designated areas of the project site, upon approval by the Engineer, suitable for material delivery, storage, and waste collection.

The Contractor shall ensure the construction yard adheres to all local, State and Federal regulations, ordinances, codes and maintained in a neat and orderly manner throughout the duration of the project. The contractor shall include the construction yard in the Erosion Control Plan or SWPPP and shall be inspected and approved prior to use of the yard. If at any time during the project the location of the construction yard changes from the approved site, the City shall be notified prior to relocation for inspection and approval. Should the Contractor fail to comply with these conditions, the Engineer may suspend the work per SSPWC section 6-3 until the condition is corrected.

At the end of the project or as required, the Contractor shall: clean up and remove all trash and debris, including all organic trash and debris; clean up and remove all hazardous and biochemical wastes from the property to the satisfaction of the agency (City, County, State, or Federal) charged with overseeing these items; and provide to the City a written release from the private property owner that they are satisfied with all clean up and removal work.

**5-9.1 Storage in Public Streets.**
Construction materials and equipment shall not be stored within public streets or right of way without prior approval from the City. In order to seek approval, Contractor shall submit a location map with all equipment or materials identified including size, duration and any BMP's installed and provide at least 7 days for review by the City.

## 5-10 WATER POLLUTION CONTROL.

The Contractor shall follow the City's guidelines for Storm Water Pollution Prevention in providing storm water pollution control at the project site, including the implementation of approved Erosion/Sediment Control Plans during construction as well as the implementation of approved Water Quality Management Plans.

Construction activities disturbing 1 acre or more of land shall comply with the State Water Resources Control Board's NPDES General Construction Storm Water Permit. A copy of the Notice of Intent (NOI) to include the Waste Discharge Identification (WDID) number shall be submitted as part of the Storm Water Pollution Prevention Plan (SWPPP) to the Engineer for review. Call (909) 782-4130 for NOI/WDID information.

All projects requiring grading shall submit to the City for review and approval an Erosion/Sediment Control Plan and a Grading Plan. Permit(s) will not be issued until plans are approved and may be revoked if work required in these specifications are not complied with.

Construction sites shall be maintained by implementation of BMPs in such manner that pollutants are not discharged from the site to the maximum extent practicable. A few references available to help with selection and implementation of applicable BMPs are:

1. California Storm Water Best Management Practice Handbook, American Public Works Association, March 1993;
2. The Construction Site Best Management Practices Manual, November 2000;
3. Storm Water Pollution Prevention Plan and Water Pollution Control Program Preparation Manual, November 2000;
4. California Regional Water Quality Control Board's San Francisco Bay Region, Guidelines for Construction Projects; and
5. California Regional Water Quality Control Board's San Francisco Bay Region, Erosion and Sediment Control Field Manual, July 1999.

All discharges into the storm drain system are prohibited except for potable water, properly treated discharge, and those discharges specifically approved by the Engineer. The following are some of the prohibited discharges:

1. Discharges that could have an impact on human health or the environment, cause or threaten to cause pollution, contamination, or nuisance;
2. Discharges that exceed any applicable water quality standard contained in a statewide Water Quality Control Plan or local Basin Plan; and
3. Discharges containing hazardous substances equal to or in excess of a reportable quantity listed in Federal regulations 40 CFR, Parts 117 and 302.

Materials that can cause or contribute to pollution or a violation of any applicable water quality standard include, but are not limited to: sediments; solid or liquid chemical spills; wastes from paints, stains, sealants, glues, limes, pesticides or herbicides and wood preservatives or solvents; asbestos fibers, paint flakes or stucco fragments; fuels, oils, lubricants or hydraulic, radiator and battery fluids; fertilizers; vehicle and equipment wash water or concrete wash water; concrete, detergent or floatable wastes; wastes from any engine and equipment steam cleaning or chemical degreasing; and chlorinated potable water line flushings.

Unless exempted or authorized by an NPDES permit, all non-storm water discharges require prior approval by the Engineer or the State Water Resources Control Board with Engineer approval.

During construction, temporary storage of such materials as identified above, must occur in a designated area physically separated from potential storm water runoff, with ultimate disposal in accordance with local, state and federal requirements.

De-watering of contaminated groundwater or discharging contaminated soils via surface erosion is prohibited.

Unless indicated otherwise by the Engineer, all projects, regardless of size, shall submit for review and approval, a Water Quality Management Plan (WQMP). The WQMP shall consist of post construction BMPs which shall remain in effect throughout the life of the facility. Refer to WQMP guidelines.

## 5-11 TEMPORARY LIGHTS, POWER AND WATER.

Any water drawn from a City fire hydrant shall be via a City owned water meter. Said meter may be obtained from the Municipal Utilities & Engineering Department. Contractor is responsible for payment of a $1200 deposit fee. Said meter shall be returned in a condition like received, less normal wear and tear. All meters are loaned subject to the conditions of the Fire Hydrant Construction Meter Water Service Application. Contractor must provide proposed location of meter and notify Customer Service at (909) 798-7516 each time the meter is relocated during construction. Water reasonably used in connection with the construction contract will be provided at no cost to the Contractor. Water use determined to be wasteful or unreasonable will be charged for at the prevailing rate.

## 5-12 PROTECTION AND RESTORATION OF EXISTING IMPROVEMENTS.

The Contractor shall relocate, re-establish, repair or replace all existing improvements within the work limits or right-of-way which are not designated for removal (e.g., sprinkler systems, curbs, sidewalks, driveways, fences, walls, signs, utility installations, pavement, structures, etc.) which are damaged or removed as a result of its operations.

Relocations, re-establishments, repairs and replacements shall be at least equal to existing improvements and shall match them in finish and dimension.

All costs to the Contractor for protecting, removing, restoring, relocating, repairing, replacing or re-establishing existing improvements shall be included in the Bid.

The Contractor shall be responsible for the maintenance of the streets and roadways to be used by public and local traffic through and adjacent to the construction zone, from the date of "Notice to Proceed" until the date of acceptance of the completed construction improvements.

Street maintenance shall include filling of potholes, grading of subgrade and base, replacing signs, installing interim pavement striping and markers on the project streets and other side streets within the construction zone. Street maintenance shall also include sweeping and washing of streets, adjacent and connected to the construction zone on a weekly, or more frequent schedule, to prevent the accumulation of dust, dirt, gravel or other deleterious materials, all as necessary to maintain the construction roadways and adjacent streets in a safe, clean and drivable condition for use by public and local traffic.

Upon request from the City for information pertaining to a claim against the contractor, contractor shall provide a written/email response, including all requested information, within 14 calendar days of City's request. If a response with all requested information is not provided to the City within 14 calendar days, a penalty of $500 per calendar day will be assessed to the Contractor by the City.

## 5-13 PUBLIC CONVENIENCE AND SAFETY.

### 5-13.1 General.

The Contractor may be allowed to close the roadway, or a portion thereof, to traffic during normal work hours upon approval from the Engineer. During any closure, the Contractor shall allow access for residents, schools, trash service trucks, churches and businesses within the affected portion of roadway, except as required for construction for a reasonable period of time. The Contractor shall notify residents as noted within Section 5-18.

The Contractor shall provide and install barricades, delineators, warning devices and construction signs in accordance with the Work Area Traffic Control Handbook (WATCH) prepared by the Southern California Chapter of the American Public Works Association. During adverse weather or unusual traffic or working conditions additional devices shall be placed as directed by the engineer. All traffic signs and devices shall conform to the current State of California, Department of Transportation (CALTRANS), "Manual of Warning Signs, Lights, and Devices for Use in Performance of Work upon Highways", unless otherwise approved by the Engineer.

Fences, barriers, lights and signs shall be furnished, erected and maintained as necessary to give an adequate warning to the public at all times that the work is under construction and of dangerous conditions to be encountered as a result thereof, and warning and directional signs shall also be erected and maintained as may be required by the City. Should the Contractor fail to furnish a sufficient number of traffic and/or pedestrian safety devices within three (3) hours after being notified, the Owner will place such necessary items and the Contractor shall be liable to the Owner for providing such devices in accordance with the following provisions:

1. For placing of barricades - $15.00 per barricade for each day or part thereof.

   For flashers - $15.00 per flasher for each day or part thereof.

   For traffic cones - $7.50 per cone for each day or part thereof.

2. In the event that the services of the Owner are required outside the normal working hours and/or days or items not noted above are furnished by the City, all costs incurred by the City shall be the responsibility of the Contractor.

The Contractor shall relocate, preserve and maintain the visibility of all signs within the project limits which affect the flow of traffic, as directed by the engineer. Any signs that are missing or found damaged shall be replaced immediately by the Contractor at his expense.

The Contractor shall provide and maintain Class II barricades along excavation edges parallel to the flow of traffic at a spacing of twenty-five feet (25'). Class II barricades mounted with flashers shall be installed around work areas in parkways. Class II barricades shall have alternating black and reflectorized white (or yellow) stripes at an angle of 45 degrees. The stripe with shall be four to six inches.

During paving operations barricades may be supplemented with minimum size eighteen-inch (18") high traffic cones and delineators such that spacing between barricades and/or cones or delineators is no greater than twenty-five feet (25"). At all access points such as intersecting streets, alleys and driveways, barricades and/or cones shall be provided at five-foot (5') intervals so as to prevent vehicular access to the paving area. Where access from an intersecting street is prohibited, a "Road Closed" sign shall be provided. "No Left Turn" sign shall be provided wherever required by the Engineer.

Clearances from traffic lanes shall be 5 feet to the edge of any excavation and 2 feet to the face of any curb, pole, barricade, delineator or other vertical obstruction.

A 4 foot wide pedestrian walkway shall be maintained in the parkway area on each side of all streets, unless otherwise authorized by the Engineer. The minimum clearance from: the edge of pedestrian walkways to any traffic lane shall be 5 feet; the edge of pedestrian walkways to any work zone shall be 3 feet; and the surface of pedestrian walkways to any overhead obstruction shall be 7 feet.

The Contractor shall, at the end of each work day, have backfilled, compacted and placed a temporary drivable roadway surface on all work areas within traveled roadways prior to leaving the job site. Failure to comply to the satisfaction of the Engineer shall result in immediate correction by City forces, and all costs shall be borne by the Contractor.

Traffic control devices shall be marked with the Contractor's name as appropriate. At no time shall any traffic control devices marked with companies or agencies other than the Contractor or subcontractors, be utilized within the work area.

All said traffic controls and safety devices shall be maintained in clean condition, with any and all graffiti removed by the end of workday on which the graffiti was first reported to the Contractor.

If the traffic control devices are deemed unacceptable by the Engineer due to being damaged, dirty, or marked incorrectly, the Contractor shall replace the traffic control devices immediately. Should the Contractor fail to furnish traffic control devices within three (3) hours after being notified, the Owner will place such necessary items and the Contractor shall be liable to the Owner for providing such devices in accordance with the provisions above.

**5-13.1.1 Vehicular Access.**
At such times as driveways are inaccessible due to the Contractor's work they shall be blocked by two (2) Class II barricades or one (1) Class II barricades and two (2) delineators. Driveways that are ramped or planked for temporary access shall be provided with a delineator at each side.

**5-13.1.2 Signage.** The Contractor shall furnish, erect and maintain all construction traffic signage as required and specified.

All construction traffic signage shall be in place prior to commencing any work, placed as needed during construction, moved as necessary and removed only upon completion of all work.

All construction traffic signage and controls shall comply with the State of California Manual of Traffic Controls, Warning Signs, Lights and Devices for use in Performance of Work Upon Highways. All construction traffic signage used in the performance of the work shall be a minimum of the encapsulated lens (high intensity) type. All traffic controls and safety devices, equipment and materials, including but not limited to cones, channelizers, delineators, flashing warning lights, barricades, high level warning devices, telescoping flag trees, flags, signs, markers, portable barriers, flashing arrow signs, changeable message signs, markings and flagging equipment shall be provided and maintained in like new condition.

When a Traffic Signal is constructed as a part of the project, the Contractor shall place and maintain for one calendar month, a message board for each approach leg to a new traffic signal. The message board shall read "CAUTION - NEW TRAFFIC SIGNAL". The one month period shall begin from the day of activation. This requirement may be lessened or waived, on a case-by-case basis, by the Engineer.

The Contractor shall furnish and properly install, construct, erect, use and continuously inspect and maintain, twenty-four (24) hours per day, seven (7) days per week, including holidays, all said

devices, equipment and materials and all temporary and permanent pedestrian and driving surfaces as necessary to provide for the safety and convenience of, and to properly warn, guide, control, regulate, channelize and protect the vehicular traffic, pedestrian traffic, project workers, and the public throughout the entire limits of the work activity and beyond said limits as necessary to include areas affecting or affected by the work, from the date of notice to proceed to the completion and acceptance of the work. Any corrective work required to be performed by City forces shall be charged to the Contractor and paid in full before release of any bonds on the project.

All traffic cones shall be no less than 28 inches in height, except that shorter cones, 12 inches minimum height, may be permitted during striping maintenance operations where the only function of the cone is to separate traffic from the wet paint. All barricades used to delineate traffic at night or placed in or adjacent to the traveled roadway at night, shall be equipped with flashing warning lights.

Channelizers shall be required when lane restrictions, detours or other work conditions need to be maintained for periods longer than normal work hours. Channelizers shall be surface-mounted type and shall be furnished, placed and maintained at the locations shown on the plans or as approved by the Engineer and shall conform to these specifications. Channelizers shall be, at the Contractor's option, one of the following types, or approved equal: (1) Safe-Hit SH236SMA; (2) Repo "The Replaceable Post"; or (3) Carsonite, "Super Duck" SDF-436.SDF-436.

**5-13.2 Traffic Control Plan**

The Contractor shall provide a Traffic Control Plan to the agency for approval prior to the scheduled commencement of work. Comments and corrections shall be returned to the Contractor within five (5) working days.

The Contractor shall be required to maintain one lane in each direction when working on the roadway. Access to schools, businesses, etc. shall be maintained as necessary for their operations. If closures are authorized by the Engineer, all detour signage shall be installed prior to closure of specified portion of roadway(s), and shall be maintained during closure.
The Contractor shall make provision to allow pedestrians full access across work areas at existing crosswalks, while working within those areas.

Traffic controls, including but not limited to vehicular and pedestrian traffic controls, maintenance of vehicular and pedestrian access, detours, and street closures shall be in accordance with Subsection 7-1, of the current edition of the "Standard Specifications for Public Works Construction," including all its subsequent amendments, and the current edition of the "Work Area Traffic Control Handbook."

Traffic control and the Traffic Control Plan shall conform to the following:

a. All major streets shall remain open to through-traffic at all times, residential street will be closed to traffic only as long as it takes for material application and drying time.

b. The Traffic Control Plan shall indicate the traffic control requirements for the different types of work to be performed. The Contractor shall be

responsible for the preparation of Plans as necessary for specific items of work. These Plans shall be approved by the City's Engineer.

c. All traffic controls and safety devices, equipment and materials, including but not limited to cones, delineators, flashing warning lights, barricades, high level warning devices (flag trees), flags, signs, markers, portable barriers, flashing arrow signs, markings, and flagging equipment shall be provided and maintained in "like new" condition.

d. The Contractor shall furnish and properly install, construct, erect, use, and continuously inspect and maintain, twenty-four (24) hours per day, seven (7) days per week, all said devices, equipment and materials and all temporary and permanent pedestrian and driving surfaces as necessary to provide for the safety and convenience of, and to properly warn, guide, control, regulate, channelize and protect the vehicular traffic, pedestrian traffic, project workers, and the public throughout the entire limits of the work activity and beyond said limits as necessary to include area affecting or affected by the work, from the start of work to the completion of the work.

In the event the slurry and cape seal ravels, a "loose gravel" (C6) sign shall be placed to adequately warn the public.

e. High-level warning devices (flag trees) are required at all times for any work being performed within the roadway unless otherwise specifically authorized by the City's Engineer.

f. All barricades shall be equipped with flashing warning lights, and all traffic cones shall be no less than twenty-eight inches (28") in height, except that shorter cones, twelve inches (12") high or higher, may be used during striping maintenance operations where the only function of the cones is to protect the wet paint from the traffic.

g. Type III barricades, no less than six feet (6') in length and equipped with two (2) Type "N" markers each and two (2) flashing warning lights each, shall be used to close streets, except as otherwise specifically authorized in advance by the City's Engineer for minor maintenance work of no more than one (1) working days duration on weekdays, or on holidays only, and between 8:00 a.m. and 3:30 p.m. only. Said barricades shall be placed across the full roadway at each point of closure with the distance between barricades or between barricades and curbs, not exceeding three feet (3'), except that one (1) eleven-foot (11')-wide gap between barricades shall be provided at the center of the street. Barricades to the right of the street's center, facing the inbound vehicular traffic, shall also be equipped with one (1) Type C2 "Road Closed" sign each or one (1) Type C3A "Road Closed to Thru Traffic" sign each.

h. Except for residential streets, as otherwise directed and/or authorized by the City's Engineer, two-way vehicular traffic shall be maintained at all times within two (2) eleven foot (11')-wide lanes on streets, having an effective roadway width of forty-four feet (44') or more with restricted parking, and other streets of lesser widths may be reduced to one (1) twelve-foot (12') wide lane with work activity being limited to one side at a time, and with one-way vehicular traffic being maintained at all times by properly trained and experienced flaggers.

No reduction of the traveled way width shall be permitted on any City street before 8:00 a.m. nor after 3:30 p.m., on weekends or holidays, or when active work is not being done, unless prior authorization to do so is granted by the City's Engineer.

Arrow boards shall be required for all lane closures on major streets.

i. Properly trained and experienced flaggers shall be provided to traffic when said traffic is to be interrupted, when two-way traffic is to be reduced to one-way traffic, and at such other times as is necessary to safely pass the traffic through or around the work area, and when so directed by the City's Engineer.

j. Vehicular access to occupied residential property may be restricted on weekdays other than holidays between the hours of 8:00 a.m. to 3:30 p.m. while essential work activity is taking place, with specific prior written approval from the City's Engineer, providing the Contractor gives the owner and/or resident at least forty-eight (48)-hour advance written and oral notice. See Part 2, "Notification of Residents," herein.

Convenient and safe pedestrian access to occupied residential property shall be maintained at all times. Access to mailboxes must be maintained at all time, such that the postal delivery service is not interrupted.

Access to vacant and unused property may be restricted at the Engineer's discretion. Both vehicular and pedestrian access shall be maintained at all times to all other property except as otherwise specifically authorized in writing by the City's Engineer.

k. Any traffic control and safety devices and equipment being used which becomes damaged, destroyed, faded, soiled, misplaced, worn out, inoperative, lost, or stolen shall be promptly repaired refurbished and/or replaced, and any traffic control and safety devices and equipment being used which are displaced or not in an upright position from any cause, shall be promptly returned or restored to their proper position.

l. An unobstructed view of all signs and warning devices including but not limited to stop signs, stop ahead signs, street names signs, and other regulatory, warning and construction signs, markers, and warning devices shall be maintained at all times. No trucks or other equipment or materials shall be stopped, parked, or otherwise placed so as to obscure said signs, markers, and devices from the view of vehicular and/or pedestrian traffic to which it applies.

m. When entering or leaving roadways carrying public traffic, the Contractor's equipment, whether empty or loaded, shall yield to said public traffic at all times, except where the traffic is being controlled by police officers, fire officers, properly trained and experienced flaggers, or at traffic signalized intersections.

n. Stockpiling and/or storage of materials on any public right-of-way or parking areas will not be allowed without specific permission of the Engineer. Materials spilled along or on said right-of-way or parking areas shall be removed completely and promptly. All stockpile and/or storage areas shall be kept in a safe, neat, clean, and orderly fashion, and shall be restored to equal or better than original condition upon completion of the work.

o. Where vehicular access to abutting property must be restricted, the work shall be so selected, arranged, and scheduled that the person(s) requiring access to said abutting property and/or residents along said streets affected will be able to park within a reasonable distance of not more than five hundred feet (500') from their homes and/or destination. Residents must be supplied written notice of such restrictions a minimum of 48 hours in advance.

p. When work has been completed on a particular street or has been suspended or rescheduled, and said street is to be opened to vehicular traffic, all equipment, "NO PARKING" signs, other obstructions, and unnecessary traffic control devices and equipment shall be promptly removed from that street except as otherwise authorized or directed by the City's Engineer.

q. Should the Contractor be neglectful, negligent, or refuse, fail, or otherwise be unavailable to promptly, satisfactorily, and fully comply with the provisions specified and referred to hereinabove, the City reserves the right to correct and/or mitigate any situation, which in the sole opinion of the City's Engineer constitutes a serious deficiency and/or serious case of noncompliance, by any means at its disposal at the Contractor's and/or permittee's expense, and will deduct the cost therefore from the Contractor's progress and/or final payment. Such corrective action taken by the City shall not reduce or abrogate the Contractor's legal obligations and liability for proper traffic control and safety measures, and shall not serve to transfer

said obligations and liabilities from the Contractor to the City or the City's agents.

r. Violations of any of the above Provisions and/or Provisions of the referenced publications, unless promptly and completely corrected to the satisfaction of the City's Engineer, shall at the sole discretion of the City, be grounds for termination of the Contract, or shut down or partial shutdown of the work, without compensation to the Contractor and/or permittee, or liability to the City, all as prescribed by Contractual obligation or State law, whichever is applicable.

Full compensation for furnishing all labor, materials, tools, equipment, flaggers, lights, channelizers (surface mounted), temporary striping, barricades, portable flashing lights, flashing arrow signs, traffic control and detour plan, and incidentals required to comply with the provisions specified and referred to herein above, to provide all required traffic and pedestrian control for the duration of this contract, all as shown and as specified, shall be paid as specified in Section 01200 of the General Requirements and no other compensation shall be made therefore.

**5-13.3 Edison Energized Conductors.** The Contractor hereby promises and agrees that in the performance of the Work, he will employ and utilize only qualified persons, as hereinafter defined, to work in proximity to Edison's secondary, primary and transmission facilities. The term "qualified person" is defined as follows:

"Qualified Person". A person by reason of experience or instruction is familiar with the operation to be performed and hazards involved.

Contractor further promises and agrees that the provisions of this paragraph shall be and are binding upon any Subcontractor or Subcontractors that may be retained by it, and that the Contractor shall take such steps as are necessary to insure compliance by said Subcontractor or Subcontractors with the requirements of this paragraph.

## 5-14 CONTRACTOR'S RESPONSIBILITY FOR DAMAGE.

**5-14.1 Responsibility for Damage.** The Contractor agrees to and does hereby indemnify, defend and hold harmless the City, its elected officials and the Consultant and their officers, agents and employees from every claim or demand made, and every liability, loss, damage, or expense of any nature whatsoever, including attorney's fees and costs, which may be incurred by reason of:

(a) Liability for damages for (1) death or bodily injury to persons, (2) injury to loss or theft of property, (3) any other loss, damage or expense arising under either (1) or (2) above, sustained by the Contractor or any person, firm or corporation employed by the contractor upon or in connection with the work called for in this agreement, except for the liability resulting from the sole negligence or willful misconduct of the City, its elected officials and their officers, employees and agents who are directly employed by the City and the Consultant; and

(b) any injury to or death of persons or damage to property caused by any fault, neglect, default or omission of the Contractor, or any person, firm or corporation employed by the Contractor, either directly or by independent contract, including all damages due to loss or theft, sustained by any person, firm or corporation, including the City, arising out of, or in any way connected with the work covered by this agreement, whether said injury or damage occurs either on or off City property, provided that any of the foregoing (1) is attributable to personal injury, bodily injury, sickness, disease or death, or to injury to or destruction of tangible property (other than the work itself), including the loss of use resulting there from, and (2) is caused in whole or in part by any act or omission of the Contractor, any subcontractor, any supplier, anyone directly or indirectly employed by any of them or anyone for whose act or omissions any of them may be liable, regardless of whether or not caused in part by any act or omission (active, passive, or comparative negligence included, excepting the active negligence of the District) of a party indemnified hereunder.

(c) The Contractor, at its own expense, cost, and risk shall defend any and all actions, suits or other proceedings that may be brought or instituted against the City, its elected officials, officers, agents and employees and the Consultant, against any such claim, demand or liability, and shall pay or satisfy any judgment that may be rendered against the City, its elected officials, officers, agents or employees, in any such action, suit or other proceedings as a result thereof.

**5-15 NO PERSONAL LIABILITY.** Neither the City Council, the Engineer, the Consultant, nor any other officer or authorized assistant or agent shall be personally responsible for any liability arising under the contract.

**5-16 CONTRACTOR'S RESPONSIBILITY FOR WORK.** Except as provided above, until the formal acceptance of the Work by the City, the Contractor shall have the charge and care thereof and shall bear the risk of injury or damage to any part thereof by the action of the elements or from any other cause, whether arising from the execution or from the non-execution of the Work. The Contractor shall rebuild, repair, restore, and make good all injuries or damages to any portion of the work occasioned by any of the above causes before final acceptance and shall bear the expense thereof, except such injuries or damages occasioned by act of the federal government or the public enemy.

The City of Redlands shall not be held responsible for the care or protection of any material or parts of the work prior to final acceptance, except as expressly provided in these specifications.

The City shall not be responsible for security of the Contractors equipment or materials at the site. The City will not be responsible for theft or damage to any property or materials of the Contractor. Security for Contractor's property shall be the responsibility of the Contractor.

**5-17 WARRANTY OF WORK.** The Contractor shall guarantee the Work against defective materials or workmanship for a period of (1) year from the date of completion date specified in the Notice of Completion, except where longer warranty periods are specifically stated. As specified in Section 2-4 in the GENERAL CONDITIONS, the Performance Bond shall remain in full force and effect during the warranty period.

All work which has been rejected, shall be remedied, or removed and replaced, by the Contractor at his own expense, with work conforming to the Plans and Specifications. Any defective material or workmanship which may be discovered before final acceptance or within (1) one year from the completion date specified in the Notice of Completion shall be corrected immediately by the Contractor at his own expense notwithstanding that it may have been overlooked in previous inspections and estimates. Failure to inspect work at any stage shall not relieve the Contractor from any obligation to perform sound and reliable work as herein described. It is the Contractor's ultimate responsibility to deliver at the time of final acceptance a complete project that complies in all details with these Contract Documents. All items shall be ready to operate.

Any omission or failure on the part of the Owner to discover or notify the Contractor of or to condemn defective work or material at the time of construction shall not be deemed an acceptance, and the Contractor will be required to correct defective work or material prior to final acceptance.

The Owner will endeavor to locate any errors or defective materials or workmanship and call them to the attention of the Contractor prior to subsequent work being performed. However, the Owner is under no obligation to do so and shall not be held liable because errors or defective material or workmanship by the Contractor are not discovered prior to subsequent work.

During the (1) one year warranty period, should the Contractor fail to remedy defective material and/or workmanship, or to make replacements within five (5) days after written notice by the Owner, it is agreed that the Owner may make such repairs and replacement and the actual cost of the required labor and materials shall be chargeable to and payable by the Contractor or his Surety.

Nothing in this section shall be construed to limit the rights of the Owner to immediately correct conditions which may be unsafe or which may pose a public health nuisance. Should said conditions later be found to be caused by defective material and/or workmanship, the Contractor and his Surety shall reimburse the Owner for costs reasonably incurred while attending the situation.

In the event it is necessary for the Owner to file suit to enforce any liability of the Contractor pursuant to this sections WARRANTY OF WORK, the Owner shall be entitled to recover from the Contractor, in addition to all other amounts found due and owing, costs of suit and reasonable expenses and fees, including reasonable attorneys' fees, incurred by the Owner in successfully enforcing the Contractor's obligations, all to be taxed as costs and included in any judgment rendered.

The warranty provided herein shall not be in lieu of, but shall be in addition to any warranties or other obligations otherwise imposed by the Contract Document or by law. The remedies provided herein shall not be exclusive and the Owner shall be entitled to any and all remedies provided by law.

**5-18 NOTIFICATION OF RESIDENTS/BUSINESSES.** The Contractor shall notify all residents, firms, institutions, agencies, and utility companies which may be affected by the work. Notification shall be by hand delivery of an approved notice within the project limits approved by the City. The notification process shall consist of two notifications, one prior to the start of construction for all properties within the project area and a second notification at least seven days in advance of any activity which may impact each specific property. In the event of any work within the downtown

area, the distribution of the second notification shall be at least fourteen days in advance of any activity. Activities impacting said properties and, therefore, requiring the above said notices include the following: the work itself; closure or partial closure of the street; and disallowance of street parking and disallowance of vehicular ingress to or egress from the property.

Said firms, institutions, agencies, and utility companies which must be notified of proposed work shall include, but are not limited to the following: public schools, private schools, day care centers, postal service, hospitals, governmental services, police department, fire department, ambulance services, Omnitrans, solid waste collection, and City street sweeping.

The proposed notice shall be submitted to the Engineer at least seven calendar days prior to the date of distribution for review and approval. The submittal shall also include a map identifying the limits of the work and proposed limits of distribution. The printed notices shall contain a general description of the work to be done, the name of the street with limits, the day and date of the work and the name and telephone number of the Contractor. The notice shall also include a statement that there will be no disruption of trash collection schedules and that trash should be set out by 6:00 a.m. on the scheduled day of pickup. If on-street parking will be affected the notice shall include a statement that no on-street parking will be allowed between the hours of 7:00 a.m. and 5:00 p.m. on the day of work, and a statement that it will be necessary to tow away parked vehicles at the owner's expense per California Vehicle Code CVC 22651L and CVC 22654D.

The Contractor will provide City with the dates and addresses of when project notifications are delivered to affected properties. City will verify the notification process is completed in compliance with the requirements of the specifications. Work will commence when City approves Contractor's compliance with the requirements set forth in the specifications.

If on-street parking is affected, the Contractor shall also post pre-approved "NO PARKING-TOW WAY" signs on 1 x 2 wood stakes or barricades at one hundred foot (100') maximum spacing along the affected areas of the street, 48 hours prior to the start of the work. The "NO PARKING-TOW AWAY" signs shall contain the day, date, and hours that parking will be prohibited on that particular street and a statement that parked vehicles will be towed away at owner's expense per California Vehicle Code CVC 22651L and CVC 22654D. The Contractor shall maintain said signs throughout the day of work, and shall start the removal of said signs by 4:00 p.m. and complete the removal by 6:00 p.m. on said day of work or as otherwise directed by the Engineer.

The Contractor shall document the day, date, and time the signs are installed because the no parking restriction cannot be enforced until the signs have been in place 24 hours. Posting of signs on trees, utility poles, light standards and other existing parkway improvement is strictly forbidden.

In the event of street resurfacing operations, the notices to residents shall contain a statement that the street to be resurfaced will be closed to vehicular traffic, and the suggestion that if they require the use of their vehicles on the day of the resurfacing work, they should consider parking their vehicle on a nearby street which is not scheduled for a resurfacing application.

In the event scheduled work is delayed, the Contractor shall immediately remove all "NO PARKING" signs. The contractor must notify all previously notified, in person and with printed notices, that the

work will be rescheduled and that they will be re-notified 48 hours in advance. The Contractor shall have an adequate supply of approved notifications for distribution to residents.

Full compensation for conforming to these requirements shall be considered as included in the various Contract items of work involved, and no additional compensation will be allowed therefore.

Failure to comply with this section shall result in a penalty assessment imposed of up to $10,000 per violation at the City's discretion.

## SECTION 6 – PROSECUTION AND PROGRESS OF THE WORK

**6-1 CONSTRUCTION SCHEDULE AND COMMENCEMENT OF WORK. -** *Add the following paragraph:*
Contractor shall notify Underground Service Alert (USA) at 1 (800) 227-2600, two working days prior to starting work, and must submit verification number to the City prior to starting work.

**6-1.2 Commencement of the Work.** - *Amend the second sentence as follows:*
"The work shall start within 10 days thereafter, and be diligently prosecuted to completion within the Contract Time."

**6-3 TIME OF COMPLETION.**

**6-4.1 General. -** *Add the following paragraphs:*
If saturated soil is encountered during construction due to leaks in an existing utility, contractor shall remove saturated material and replace with a suitable backfill material until adequate compaction can be attained by verification from the City's Geotechnical Engineer.

Prior to any removal of saturated material, contractor shall discuss the methods of remediation with the City's representative. Approval from the City, or the City's representative, shall be obtained for any amount of saturated material removal in which the contractor anticipates to be compensated for, if approval is not obtained all costs shall be borne by the contractor.

Up to a 14 day delay in paving operations may be requested after all leaks have been resolved to provide time for excess moisture to dissipate, at no additional cost to the city, in lieu of removing and replacing the saturated soil. A no cost change order will be prepared to provide the contractor with additional contract time if such delay is requested by the City.

**6-9 LIQUIDATED DAMAGES.** The value of liquidated damages noted in this section is amended to five hundred dollars ($500) per working day.

**6-10 NOTICE AND SERVICE THEREOF.** Any notice required or given by one party to the other under the Contract shall be in writing and shall be dated and signed by the party giving such notice or by duly authorized representative of such party. Any such notice shall not be effective for any purpose whatever unless served in the following manner:

Notice shall be given to the Contractor by personal delivery thereof to said Contractor or to his authorized representative at the project site, or by deposing the same in the United States Mail enclosed in a sealed envelope addressed to said Contractor at the address established for the conduct of work under this Contract, certified and with postage prepaid.

Notice shall be given to the Surety, or any other person, by personal delivery to said Surety or other person, or by depositing the same in the United States Mail, enclosed in a sealed envelope addressed to such Surety or persons at the address of said Surety or persons last communicated by him to the party giving the notice, certified and with postage prepaid.

Notice shall be given to the Owner by personal delivery thereof or by depositing the same in the United States Mail enclosed in a sealed envelope, certified and with postage prepaid. The address of record for the owner is:

City of Redlands
Municipal Utilities & Engineering Department
P.O. Box 3005
35 Cajon Street, Suite 15A
Redlands, CA 92373

**6-11 PUBLIC RECORDS ACT.** All documents, Plans, specifications and all other information relating to the conduct of the City's business, including information submitted by the Contractor, shall become the exclusive property of the City and except as provided by law shall be deemed public records. Said information shall be subject to the provisions of the California Public Records Act (Government Code Sections 6250 et seq.).

Under no circumstances will the City be responsible or liable to the Contractor, submitter or any other party for the disclosure of any records or information submitted to the City, regardless of whether such records or information are labeled "Trade Secret", "Confidential", or "Proprietary" (or words to similar effect) and regardless of whether the disclosure is required by law or a court order or occurs through inadvertence, mistake, or negligence on the part of the City or its officers, employees, and/or Contractors.

The City will not advise as to the nature or content of documents entitled to protection from disclosure under the California Public Records Act, including interpretations of the Act or the definition of "Trade Secret". The submitting party shall be solely responsible for all determinations made under the Act, and where appropriate for clearly and prominently marking each and every page or sheet of information with "Trade Secret", "Confidential", or "Proprietary". Each submitting party is advised to contact its own legal counsel concerning the California Public Records Act and its applicability to the submitting party's own circumstances.

In the event of litigation concerning the disclosure of any information submitted by the submitting party, the City's sole involvement will be as a stakeholder, retaining the information until otherwise ordered by a court. The submitting party, at its sole expense and risk, shall be responsible for any and all fees and costs for prosecuting or defending any action concerning the information, and shall

indemnify and hold the City harmless from all costs and expenses including attorneys' fees, in connection with such action.

# SECTION 7 - MEASUREMENT AND PAYMENT

## 7-3 PAYMENT.

**7-3.2 Partial and Final Payment.** - *Delete and replace with the following:*
The closure date for the purpose of making monthly progress payments shall be assigned by the Engineer during the pre-construction meeting. Payment, less deductions, unearned work and retention, will be made within 30 days of the closure date. If a dispute exists between the City and the Contractor regarding an item included in the Contractor's Monthly Progress Payment Request, progress payments will be withheld until said dispute is resolved, in which case longer period of time will be required to make such payment. No such payment shall be required to be made, when in the judgment of the Engineer, the total value of the work since the last estimate amounts to less than $500. If, in the opinion of the Engineer, work is not progressing according to the approved schedule, payments may be withheld until the Contractor returns to the approved schedule.

Deductions will be made for: (1) amounts due the Owner for equipment or material furnished or services rendered; (2) amounts due the Owner under the terms of the Contract; (3) amounts of any claims of lien filed with the Owner; (4) accrued amounts of liquidated damages; (5) amounts required to be deducted by Federal, State or local governmental authorities. From the balance thus determined will be deducted the amounts of all previous payments, and the remainder shall constitute the monthly payment due the Contractor.

A retention of five percent (5%) will be withheld from each and every progress payment to the Contractor. This percentage will remain constant throughout the duration of the Contract. The City shall make a progress payment within thirty (30) days after receipt of an undisputed and properly submitted payment request from Contractor pursuant to Public Contract Code section 20104.50.

After completion of the work to the satisfaction of the Engineer, the Engineer shall make a final estimate of the amount of work done. The City shall pay the entire sum so found to be due after deducting there from all previous payments and all amounts to be retained under the provisions of the Contract. All prior partial estimates and payments shall be subject to correction in the final estimate and payment. The final payment shall not be due and payable until the expiration of thirty-five (35) days from and after the recordation of the Notice of Completion filed by the City.

As provided by paragraph 22300 of the California Public Contract Code, the Contractor may substitute securities for any monies withheld by the City to ensure performance under the Contract. Substitute securities shall be deposited in a financial institution in a form acceptable to the City of Redlands. The financial institution shall be located within the City limits of the City of Redlands. The Escrow Agreement to be used is set forth in Public Contract Code section 22300.

**7-3.3 Delivered Materials.** - *Delete and replace with the following:*
No payment will be made for materials or equipment delivered but not yet incorporated in the work.

**7-4.2.6 Extras.** Without invalidating the Contract, the City may order extra work or make changes by altering, adding or deducting from the work, the Contract sum being adjusted accordingly and the consent of the Surety being first obtained where necessary or desirable. All the Work of the kind bid upon shall be paid for at the price stipulated on the proposal, and no claims for any extra work or material shall be allowed unless the work is ordered in writing by the engineer and the price is stated in such order.

**7-4.2.7 Claims for Extra Costs.** No claim for extra work or cost shall be allowed unless the same was done in pursuance of a written order by the Engineer, as aforesaid, and the claim presented with the first estimate after the changed or extra work is done. When work is performed under the terms of the General Conditions, the Contractor shall furnish satisfactory bills, payrolls, and vouchers covering all items of cost and when requested by the City, give the City access to accounts relating thereto.

After completion of the work to the satisfaction of the Engineer, the Engineer shall make a final estimate of the amount of work done. The City shall pay the entire sum so found to be due after deducting there from all previous payments and all amounts to be retained under the provisions of the Contract. All prior partial estimates and payments shall be subject to correction in the final estimate and payment. The final payment shall not be due and payable until the expiration of the thirty-five (35) days from and after the recordation of the Notice of Completion filed by the City.

## SECTION 8 - FACILITIES FOR AGENCY PERSONNEL

This section is deleted in its entirety.

## SECTION 9 - ASSIGNMENT OF UNFAIR BUSINESS PRACTICES CLAIMS

**9-1.** In entering into a public works contract or a subcontract to supply goods, services, or materials pursuant to a public works contract, the Contractor or subcontractor offers and agrees to assign to the City all rights, title and interest and to all causes of action it may have under Section 4 of the Clayton Act (15 U.S.C. Sec. 15) or under the Cartwright Act (Chapter 2, commencing with section 16700 of part 2 of division 7 of the Business and Professions Code), arising from the purchase of goods, services, or materials pursuant to this public works agreement. This assignment shall be made and become effective at the time the City tenders final payment to the Contractor, without further acknowledgment by the Parties.

## SECTION 10 - TRENCHING AND EXCAVATION

**10-1.** If this contract involves digging trenches or other excavations that extend deeper than (4) feet below the surface, the following shall be done pursuant to California Public Contract Code Section 7104:

A. That the Contractor shall promptly and before the following conditions are disturbed, notify the City in writing, of any:

(1) Material that the Contractor believes may be material that is hazardous waste, as defined in Section 25117 of the Health and Safety Code, that is required to be removed to a Class I, Class II or Class III disposal site in accordance with provisions of existing law.

(2) Subsurface or latent physical conditions differing from those indicated.

(3) Unknown physical conditions at the site of any unusual nature, different materially from those ordinarily encountered and generally recognized as inherent in work of the character provided for in the contract.

B. That the City shall promptly investigate the conditions, and if it finds that the conditions do materially so differ, or do involve hazardous waste, and cause a decrease or increase in the Contractor's cost of, or the time required for, performance of any part of work shall issue a change order under the procedures described in the contract.

C. That, in the event that a dispute arises between the City and the Contractor whether the conditions materially differ, or involve hazardous waste, or cause a decrease or increase in the Contractor cost of, or time required for, performance of any part of the work, the Contractor shall not be excused from any scheduled completion date provided for by the contract, but shall proceed with all work to be performed under the contract. The Contractor shall retain any and all rights provided either by contract or by law which pertains to the resolution of disputes and protests between the contracting parties.

## SECTION 11 - REMOVAL, RELOCATION OR PROTECTION OF EXISTING UTILITIES

**11-1.** Pursuant to Government Code Section 4215 et seq, the City shall assume the responsibility between the parties to this contract, for the timely removal, relocation, or protection of existing main or trunk line utility facilities located on the site of the construction project for this contract, if such utilities are not identified by the public agency in the plans and specifications made a part of the invitation for bids.

**11-2.** The Contractor shall be compensated for the costs of locating, repairing damage not due to the failure of the Contractor to exercise reasonable care, and removing or relocating such utility facilities not identified in the plans and specifications with reasonable accuracy and for equipment on the project necessarily identified during such work.

**11-3.** The Contractor shall not be assessed liquidated damages for delay in completion of the project, when such delay was caused by the failure of the City, or the owner of the utility to provide for removal or relocation of such utility facilities.

**11.4.** The City shall not be required to indicate the presence of existing service laterals or appurtenances whenever the presence of such utilities on the site of the construction project can be inferred from the presence of other visible facilities, such as buildings, meter and junction boxes, on adjacent to the site of construction, provided, however, nothing herein shall relieve the City from identifying main or trunk lines in the plans and specifications.

**11.5.** Nothing herein shall preclude the City from pursuing appropriate remedy against the utility for delays which are the responsibility of the utility.

**11.6.** If the Contractor, while performing the contract, discovers utility facilities not identified by the City in the contract plans or specifications, Contractor shall immediately notify the City and the utility in writing.

**11.7.** The public utility, when it is the owner, shall have the sole discretion to perform repairs or relocation work or permit the Contractor to do such repairs or relocation work at a reasonable price.

**11.8.** Contractor shall comply with Government Code Section 4216 through 4216.9.

**11.9.** Conduits from existing street light and traffic signal systems may be encountered during construction of this project. All removals, relocations, and/or replacements of existing conduit systems shall be performed in accordance with these specifications and City standards, by a qualified electrical contractor. All costs for said work shall be borne by the Contractor and paid as a part of the various items of work requiring such removals, relocations, and/or replacements, and no other compensation shall be made therefore.

## SECTION 200 - ROCK MATERIALS

### 200-2 UNTREATED BASE MATERIALS.

**200-2.1 General.** - *Amend the first paragraph as follows:*
"Materials for use as untreated base or subbase shall be classified in the order of preference as follows:
Crushed Aggregate Base
Crushed Miscellaneous Base
Pulverized Miscellaneous Base."

**200-2.4.1 General.** - *Delete the second sentence and replace with the following:*
"The material shall be free of deleterious material as defined in 200-1.1."

**200-2.4.2 Grading.** - *Amend the first sentence of paragraph 1 as follows:*
"The material shall be uniformly graded and shall conform to the 'fine' gradations:"

**200-2.5.1 General.** - *Delete the third sentence and replace with the following:*
"The material shall be free of deleterious material as defined in 200-1.1."

**200-2.8.1 General.** - *Amend as follows:*
*Delete the second sentence of paragraph 1 and replace with the following:*
"Pulverized miscellaneous base may contain underlying base material."

*Delete the third sentence of paragraph 1 and replace with the following:*
"The material shall be free of deleterious material as defined in 200-1.1."

# SECTION 201 - CONCRETE, MORTAR AND RELATED MATERIALS

## 201-1 PORTLAND CEMENT CONCRETE.

**201-1.1.1 General** - *Add the following paragraph:*
The Contractor shall furnish the Engineer in the field with a copy of the mix design to be used, and with a legible certified weighmaster's certificate for each load of PCC delivered to the project. PCC delivered to the project site having a water content and/or slump greater than that specified in the mix design, shall be rejected and removed from the project site.

**201-1.1.2 Concrete Specified by Class and Alternate Class -** *Amend Table 201-1.1.2.(A) as follows:*

**Street Surface Improvements section -**
All concrete in this section shall have a minimum compressive strength at 28 days of 22,410 kPa (3,250 pounds per square inch), and meet the requirements of class 330-C-23 (560-C-3250) concrete.

**Sewer & Storm Drain Facilities** section, Sidehill Surface Drainage Facilities subsection -
All concrete in this subsection shall have a minimum compressive strength at 28 days of 22,410 kPa (3,250 pounds per square inch), and meet the requirements of class 330-C-23 (560-C-3250) concrete.

**201-1.4.3 Transit Mixers.** - *Replace the first sentence in paragraph 6 with the following:*
The total elapsed time between addition of water at the batch plant and the completion of the discharge of the PCC from the mixer, shall not exceed ninety (90) minutes. All PCC remaining in the mixer, after said ninety (90) minutes time limit, shall be rejected and removed from the project site.

# SECTION 203 - BITUMINOUS MATERIALS

## 203-3 EMULSIFIED ASPHALT.

**203-3.1 General. -** *Modify the section by adding the following:*
Asphalt emulsion shall be a <u>QUICKSET ANIONIC OR CATIONIC EMULSIFIED ASPHALT</u> conforming to the requirements of Subsection 203-1.3, "Test Reports and Certification", and Subsection 203-1.2, "Testing Requirements" of the Standard Specifications.

The latex additive shall be Ultra Pave 70 (for anionic) or Ultra Pave 65 K (for cationic) or an approved equal. The latex shall be added at the emulsion plant after weighing the asphalt and before the addition of mixing water. The latex shall be added at a rate of two to two-and-one-half (2 to 2.5) parts to one-hundred (100) parts of emulsion by volume.

## 203-5 SLURRY SEAL.

**203-5.1 General. -** *Delete the sentence and replace with the following:*
Slurry seal shall be emulsion-aggregate slurry (EAS) conforming to 203-5.4.

**203-5.2 Mix Design. -** *Modify the section by adding the following:*

(f) Admixtures, such as Portland Cement or aluminum sulfate may be mixed into the slurry material to adjust curing time such that the applied slurry can support vehicular traffic within 60 minutes.

(g) Use of slag shall not be permitted.

(h) Deliveries of aggregate and emulsion shall not be made without the engineer present. Emulsion is not to be transferred to an on-site storage tanker without the sieve test performed by the City.

**203-5.3.2 Grading. -** *Delete the sentence and replace with the following:*
The combined aggregate gradation shall be determined in accordance with ASTM C136 and conform to Type II requirements shown in Table 203-5.3.2 (A).

**203-5.4.1 General. –** *Modify the paragraph and replace with the following:*
EAS shall be a stable mixture of emulsified asphalt, aggregate, water, a set control agent, and latex. EAS shall be Type II-CQS-1h-EAS.

**203-5.4.2.1 Aggregate. –** *Delete the sentence and replace with the following:*
Aggregate shall be Type II conforming to 203-5.3.

**203-5.4.2.2 Emulsified Asphalt. –** *Modify the first paragraph and replace with the following:*
Emulsified asphalt shall be quick-set, and contain latex. Quick-set emulsified asphalt shall be CQS-1h conforming to 203-3.

**203-6 ASPHALT CONCRETE.**

**203-6.1 General. -** *Add the following paragraph:*
Unless otherwise approved by the Engineer, asphalt concrete for paving shall be C2-PG 64-10 (1/2") for finish paving or B-PG 64-10 (3/4") for base paving. Asphalt concrete for Type D1 or Type D2 curb shall be D2 –PG 70-10.

## SECTION 206 - MISCELLANEOUS METAL ITEMS

**206-7 TRAFFIC SIGNS.**

**206-7.1 General.** The Contractor shall furnish or relocate and erect all traffic signage as required and specified.

All new traffic signage shall be a minimum of the encapsulated lens (high intensity) type, have an anti-graffiti protective covering and be installed on new posts. All traffic signage to be relocated shall be installed on new posts.

**206-7.2 Protective Covering.** Anti-graffiti protective covering shall be Type 1150-POF, manufactured by 3M Company, or approved equal.

**206-7.3 Post and Base.** New posts and bases shall be Ultimate Sign Support System as manufactured by Western Highway, or approved equal.

## SECTION 207 – GRAVITY PIPE

### 207-2 REINFORCED CONCRETE PIPE (RCP).

**207-2.1 General.** - *Add the following sentences to paragraph 2:*
The minimum D-load for any RCP shall be 1,350. The minimum size for RCP shall be 18 inches (457 mm) unless otherwise approved by the Engineer.

## SECTION 211 - MATERIAL TESTS

### 211-1 COMPACTION TESTS.

**211-1.4 General.** The Contractor shall be responsible for all quality control for all work. The Contractor shall complete all necessary testing to ensure the quality requirements within the specifications are achieved. The Contractor shall conduct the compaction testing by a geotechnical engineering firm and the results of the testing shall be made available to the Engineer.

The City will complete assurance testing throughout the project by an independent testing firm. The City will perform the first compaction test required at any location. If such test does not meet the required specifications, the City will make additional tests until the required compaction is obtained and withhold from the final payment due the Contractor, the cost of all such additional tests. To be acceptable, tests must be ordered and witnessed by the City. Tests will be ordered by the City and performed at a location and depth as directed by the City. The Contractor shall assist the City in performing these tests as necessary. The Contractor shall provide to the City the maximum dry density and the optimum moisture content results of backfill and bedding material when requested by the City.

## SECTION 214 - TRAFFIC STRIPING, CURB AND PAVEMENT MARKINGS, AND PAVEMENT MARKERS

### 214-4 PAINT FOR STRIPING AND MARKINGS.

**214-4.1 General.** - *Amend the first sentence in paragraph 4 as follows:*
"Glass beads conforming to 214-3 shall be mechanically applied at a rate of 0.6 to 0.8 kg of beads per liter (5 to 7 pounds of beads per gallon)."

# SECTION 300 - EARTHWORK

## 300-1 CLEARING AND GRUBBING.

**300-1.1 General.** - *Amend as follows:*

*Amend paragraph 3 as follows:*
"The natural ground surface shall be cleared of all vegetable growth, such as trees, logs, upturned stumps, roots of downed trees, brush, grass, weeds, shrubs, ground cover, tree stumps, decorative landscape rocks, edging, railroad ties, other decorative landscape treatments, boulders, rock, portland cement concrete, and all other objectionable materials, within the limits of construction."

*Add the following paragraphs:*
Grubbing and removal of organic debris shall include the repair and/or replacement of all parkway irrigation piping and systems necessary to perform work on this Contract and capping pipelines until such time that permanent repairs and/or replacements have been made.

All debris removed from the project site under this item shall be disposed of at an approved dump site. All transportation costs and dump fees shall be borne by the Contractor.

Clearing and Grubbing shall include, but is not limited to, the following:

1. Removal of existing AC berms.

2. Removal of all curb and gutter, cross gutters, and spandrels shall be replaced within three (3) calendar days. The Asphalt Concrete patch for areas with curbs and gutters removed and replaced shall be placed within two (2) working days after the curb and gutter, cross gutters, and spandrels are replaced. Removal of all sidewalks shall be replaced within three (3) calendar days.

3. Saw cut and removal of poles, posts, PCC pavements, curb, gutter, and sidewalk. Holes resulting from removal of existing poles and posts from existing PCC, AC pavements and curbs and gutters, shall be filled or patched with like materials. Self-propelled drop hammers will not be allowed for removals.

4. Removal of all raised pavement markers not conforming to the approved plan or conflicting with the proposed striping as shown on the plans in accordance with Subsection 312-3, Removal, of the Standard Specifications.

5. Removal and disposal of boulders, rock or PCC.

6. All trees and shrubs less than 3m (9 ft) directly above the entire sidewalk surface shall be trimmed and removed by the contractor to allow a clear path of travel for pedestrians.

7. Irrigation system relocation:

Any irrigation systems in conflict with the proposed improvements that are removed, damaged, disturbed, or broken shall be modified, repaired, and/or replaced to be operable and provide full irrigation coverage to the areas requiring irrigation using new materials, equal or better than the original materials, with 20 mm (3/4 in) Schedule 40 PVC being the minimum acceptable for underground lines and 13 mm (1/2 in) Schedule 80 being minimum acceptable for risers and with the systems not being out of operation for more than two (2) days. No payment for work associated with the irrigation repair will be released, until all irrigation is complete, operable and accepted by the City.

All trees, shrubbery and lawns deprived of normal irrigation watering due to a disruption of service caused by the Contractor's operations shall be regularly and thoroughly irrigated by the Contractor so that said plantings will not be damaged. If any trees, shrubbery or lawns die or suffer unacceptable damage as a result of or precipitated by the Contractor's operations the Contractor shall replace same with the same plant species and size. Existing grass lawns within areas that must be excavated and/or re-graded shall be cut into approximate 305 mm (1 ft) squares, removed, protected, cared for and replaced as soon as possible. Dead, dying, and unacceptably damaged grass shall be replaced with new grass sod.

8. Existing inlets, slotted drains, drainage pipes, concrete gutters, drainage pipes, where any portion of such structure is within 1m of the grading plane in the excavation areas, or within 300 mm (1 ft) of original ground in embankment areas, or where shown on the plans to be removed, shall be completely removed and disposed of accordingly.

9. Removal and disposal of existing drainage inlet structure and PCC or AC apron.

10. The Contractor shall dispose all materials not being salvaged outside of the right-of-way and shall pay for all costs for disposal.

11. Removal and disposal of any abandoned utilities that may interfere with the improvements.

12. Self-propelled drop hammers will not be allowed for removals.

**300-1.3.1 General.** - *Add the following paragraphs:*
The Contractor shall dispose portland cement concrete, stone rubble, and brick at an approved dump site.

All reprocessed asphaltic cement concrete may be placed as the lower course of crushed aggregate base material. If the Contractor chooses not to reprocess the material, disposal at an approved dump site shall be required. All costs for disposal shall be borne by the Contractor. If the Contractor chooses to reprocess material, it shall be protected and remain contaminate-free, otherwise disposal at an approved dump site will be required with all costs borne by the Contractor.

All reprocessed asphaltic cement concrete to be used as crushed aggregate base shall be ground to conform to Section 200-2.2.

**300-1.3.2 (a) Bituminous Pavement.** - *Amend the following:*

*Amend the second sentence as follows:*
"Saw cutting of edges to be joined shall be with a power-driven saw. The groove shall be cut to a minimum depth of 4 inches (102 mm)."

*Amend the third sentence as follows:*
"Where bituminous pavement is to be removed, a cold mill header cut of maximum 6 feet (1.8 m) in width perpendicular to the join line shall be made, and a minimum laying depth of 1 inch (25mm) of new pavement material shall be provided at the join line."

*Amend the fourth sentence as follows:*
"The edges of existing concrete pavement adjacent to the trench shall be saw cut to neat straight lines for the purpose of removing the damaged pavement areas."

*Add the following sentence:*
Work under this item shall include asphalt concrete berms.

**300-1.3.2 (b) Concrete Pavement.** - *Amend the following:*

*Amend the second sentence as follows:*
"Saw cuts shall be made to a minimum depth of 4 inches (102 mm)."

*Amend the third sentence as follows:*
"If a saw cut in concrete pavement falls within 5 feet (1.5 m) of a construction joint, cold joint, expansion joint, or edge, the concrete shall be removed to the joint or edge."

**300-1.3.2 (c) Concrete Curb, Walk, Gutters, Cross Gutters, Driveways and Alley Intersections.** - *Amend the following:*
*Amend the first sentence as follows:*
"Concrete shall be removed to neatly sawed edges with saw cuts made to a minimum depth of 4 inches (102 mm)."

*Amend the third sentence as follows:*
"No section to be replaced shall be smaller than 36 inches (1 m) in either length or width."

*Amend the fourth sentence as follows:*
"If the saw cut in sidewalk or driveway would fall within 36 inches (914 mm) of a construction joint, expansion joint, or edge, the concrete shall be removed to the joint or edge, except that where the saw cut would fall within 12 inches (300mm) of a score mark, the saw cut shall be made in and along the score mark."

*Amend the fifth sentence as follows:*
"curb and gutter shall be sawed to a depth of 4 inches (102 mm) on a neat line at right angles to the curb face."

**300-1.3.2 (d) Striping and Markings.** All existing striping, markings and raised pavement markers shown to be removed or necessary to be removed from paving areas. This item includes removal in compliance with applicable laws and cleanup of residue from the operation.

All striping, markings and raised pavement markers removed beyond the limits shown on the plans for and/or at the convenience of the Contractor shall be replaced at the Contractor's expense.

**300-1.3.2 (e) Structures.** All existing concrete structures (reinforced or non-reinforced) as shown on the plans to be removed or abandoned, including but not limited to, undersidewalk drains, manholes, headwalls, bulkheads, drop inlet structures, energy dissipaters, catch basins, vaults and pipelines. Abandonment shall include all cuts and concrete plugs necessary to seal ends or openings of abandoned pipes or structures.

**300-1.3.2 (f) Rock Curbs.** All rock from rock curb removals, as shown on the plans or required for construction of the project, shall be transported, delivered and unloaded at a storage site as directed by the Engineer.

**300-1.3.2 (g) Miscellaneous Removals.** All other removals of facilities, as shown on the plans but not covered under separate bid items, and any underground facilities found during the work and not shown on the plans shall be performed. The City has endeavored to show all known underground facilities but is not responsible for unknown or abandoned facilities. Unknown underground facilities shall be paid as extra work.

**300-1.3.2 (h) Miscellaneous Relocations.** All relocation work as shown on the plans or required for construction of the project, but not covered under separate bid items, shall be included as a part of Subsection 300-1 Clearing and Grubbing. All relocation work performed as a part of clearing and grubbing work shall conform to the requirements and specifications of the agency or utility having jurisdiction over the item to be relocated.

**300-1.4 Payment.** - *Add the following sentence to paragraph 1:*
Payment for work on this item shall be made as a percentage of the work completed at each monthly payment.

**300-2 UNCLASSIFIED EXCAVATION.**

**300-2.2.2 Wet Material.** - *Amend the second sentence of the paragraph:*
"If such high moisture content is not the result of any action on the part of the Contractor, or inaction in protecting the work during the course of the contract, the work involved will be paid for in the following manner: Over-excavation and disposal work shall be considered "extra work," with backfill and compaction of crushed aggregate base paid under the appropriate bid item in these specifications."

**300-12 MISCELLAENOUS GRADING.** The parkway, whether landscaping exists or not, shall be graded and compacted to achieve drainage towards the street at a slope of 2%. Grading shall be coordinated such that it is the last item of work to be completed, prior to site clean-up. Loose material and dirt shall be raked, compacted and distributed throughout the parkway area. Areas

adjacent to installed improvements must be graded to a level within one inch from the finished surface. Extra dirt/fill shall be removed from the project in accordance with Specifications.

The Contractor, at his expense shall photo-document pre-construction conditions prior to starting excavating. After construction is completed, the Contractor shall photo-document the finished grade. The Contractor shall provide the City with said photos with addresses identifying each property location, the direction the photograph was taken (facing North, South etc). The Contractor shall keep a copy of the photos (either electronically or hard copy) and provide the City with electronic copies of the photos.

## SECTION 301 - TREATED SOIL, SUBGRADE PREPARATION AND PLACEMENT OF BASE MATERIALS

### 301-1 SUBGRADE PREPARATION.

**301-1.3 Relative Compaction.** - *Amend the second sentence of paragraph 1 as follows:*
"When base material, curb, gutter, alley pavement, driveways, or sidewalks are to be placed on the subgrade material, the top 6 inches (150mm) of such subgrade material shall be compacted to a relative compaction of 95 percent."

**301-2.1 General. –** *Add the following paragraphs:*
The contractor shall use 'crushed aggregate base' or 'crushed miscellaneous base, fine graded' as the base material. The use of 'processed miscellaneous base,' 'select subbase,' or 'disintegrated granite' shall not be used as base material.

The contractor may use 'pulverized miscellaneous base' (grindings) as part of the crushed base material. Said grindings shall be uncontaminated and placed in an even thickness as the lower course of crushed base material. Spreading and compacting shall comply with Sections 301-2.2 and 301-2.3.

**301-2.3 Compacting. –** *Amend the second sentence of paragraph 3 as follows:*
"Compaction in the excepted areas shall be as specified in 211-1 with each layer of compacted base material having a minimum relative compaction of 95 percent."

**301-2.4 Measurement and Payment. –** *Add the following paragraph:*
Payment shall be made for cold-planing, storing, placing, and compacting reprocessed asphalt concrete pavement (grindings) as part of the crushed aggregate base (CAB) material. The volume of grindings placed shall be figured and a tonnage figure computed using 9.35 kg/m^3 (150 pounds per cubic foot). This tonnage figure shall be paid as part of the crushed aggregate base tonnage for this project.

### 301-7 FULL DEPTH RECLAMATION WITH MECHANICAL STABILIZATION (FDR-25)

**301-7.1 Description.** This rehabilitation alternative consists of pulverizing the existing asphalt concrete (AC) layer along with the underlying unbound material to a depth of 6, 9 or 12 inches per

plan and specifications. The properties of this layer are considered to be similar to an Aggregate Subbase material with a modulus of at least 25 ksi.

The manufacture of the recycled base course shall be done in-place by pulverizing and blending the existing AC layer and base materials, if present. The process shall be accomplished in accordance with these specifications and conform to the lines and grades shown in the plans or as established by the engineer.

**301-7.2 Construction**. The asphalt concrete surfacing and underlying base materials shall be pulverized such that 100 percent of the material will pass a two-inch sieve and a minimum of 90 percent will pass a one and one-half inch sieve. All materials other than rock and pulverized asphalt concrete shall be broken up such that these materials will pass a one inch sieve. The pulverized materials shall be free of roots, weeds, wood, and construction debris. All grass and other vegetation shall be removed from the edge of the exiting pavement or lip of gutter pan to prevent contamination of the pulverized bituminous material during the milling operation.

Trimming and disposal of excess material, if required, will be performed on the intimate mixture of pulverized asphalt concrete, base materials and subgrade soil. Excess pulverized material is the surplus that results after trimming and grading the pulverized pavement section to the lines and grades matching existing and/or per plans and specifications.

Do not start pulverized roadbed activities if the ambient air temperature is below 40F. If the ambient air temperature falls below 40F, you may only compact and finish pulverized roadbed. Before starting daily pulverized roadbed activities, sweep the pulverized roadbed area constructed the previous day to remove loose material.

**301-7.3 Surface Preparation.** Before pulverized roadbed activities start, prepare the existing roadway surface by:

1. Clearing foreign matter including vegetation
2. Removing standing water
3. Referencing the profile and cross slope
4. Marking the proposed longitudinal cut lines on the existing pavement as follows:
   - 4.1. Cut lines must coincide with points where the existing cross slope changes, approximately at the centerline and edge of traveled way
   - 4.2. Cut lines must indicate the sequence of the cuts
5. Referencing existing lane lines and striping layout

Final subgrade surface shall slope away from the street centerline to a maximum of 3% grade. Pulverized asphalt material must be used as base material to meet new cross slope requirements. Native sub-grade material may need to be hauled off to allow for the use of all pulverized base material. No additional compensation will be allowed for any sub-grade removal and haul-off if required. Any contaminated material will be removed and disposed of by the contractor off site at his expense. Any shortage of material, caused by premature disposal of the indicated surplus material by the contractor, shall be replaced by it and no additional compensation will be allowed for such replacement.

**301-7.4 Spreading, Mixing, and Compacting.** Do not use a heating device to soften the pavement. Remove any visible oversized materials in the pulverized roadbed mixture prior to shaping and compacting. If you encounter unstable subgrade or rocks greater than 4 inches in the roadway section, notify the Engineer. The Engineer determines the extent of the unsuitable material and the corrective measures to be taken.

According to the Section 301-2.3, the compaction shall always be commenced along the edge of the area to be compacted and the roller shall gradually advance toward the center of the area to be compacted. Rollers shall be operated along lines parallel or concentric with the centerline of the road being constructed, and no material variation therefrom will be permitted. All rollers must be maintained in good mechanical and working condition.

The relative compaction of each layer of compacted base material shall not be less than 95 percent. ASTM D2922, Methods of Density of Soil and Soil Aggregate in Place by Nuclear Methods, (or ASTM D1556). After compaction, the sub-grade shall be firm, and unyielding.

**301-7.5 Finishing**. The finished pulverized roadbed surface must not vary more than 0.05 foot from the lower edge of a 12-foot straight edge laid in directions parallel and perpendicular to the centerline. Variations within the above specified tolerances shall be compensating so that the average grade and cross section specified are met. The finished surface must be free from segregation, tearing, and scarring, and have a uniform surface texture throughout the work limits.

## 301-8 FULL DEPTH RECLAMATION WITH CEMENT STABILIZATION (FDR-200)

**301-8.1 Description.** This rehabilitation alternative consists of pulverizing the existing asphalt concrete (AC) layer along with the underlying unbound material to a depth of 6, 9 or 12 inches per plan and specifications. The properties of this layer are considered to be similar to an Aggregate Subbase material with a modulus of at least 200 ksi.

The manufacture of the recycled base course shall be done in-place by pulverizing and blending the existing AC layer and base materials, if present, and adding cement. Micro-cracking of the completed cement stabilized surface is required before HMA is to be placed directly on top of the cement treated surface, regardless of the AC thickness. The process shall be accomplished in accordance with these specifications and conform to the lines and grades shown in the plans or as established by the engineer.

The cement content must be 2% by dry weight of FDR with cement with a dry unit weight of 130 lb/cu ft for 6” FDR section. The cement content must be 3% by dry weight of FDR with cement with a dry unit weight of 130 lb/cu ft for 9” FDR section. The cement content must be 4% by dry weight of FDR with cement with a dry unit weight of 130 lb/cu ft for 12” FDR section. Cement must be Type II or Type V Portland cement specified in ASTM C 150/150M.

**301-8.2 Construction**. The asphalt concrete surfacing and underlying base materials shall be pulverized such that 100 percent of the material will pass a two-inch sieve and a minimum of 90 percent will pass a one and one-half inch sieve. All materials other than rock and pulverized asphalt

concrete shall be broken up such that these materials will pass a one inch sieve. The pulverized materials shall be free of grass and vegetation, and construction debris to prevent contamination of the pulverized materials. Mixing shall continue until, and at the speed of the recycling unit adjusted to ensure, a homogenous mixture of the above materials and pulverized materials are achieved.

Trimming and disposal of excess material, if required, will be performed on the intimate mixture of pulverized asphalt concrete, base materials and subgrade soil. Excess pulverized material is the surplus that results after trimming and grading the pulverized pavement section to the lines and grades matching existing and/or per plans and specifications. Excess pulverized material shall consist of non-treated well mixed pulverized AC pavement and subgrade.

Do not start pulverized roadbed activities if the ambient air temperature is below 40F. If the ambient air temperature falls below 40F, you may only compact and finish pulverized roadbed. Before starting daily pulverized roadbed activities, sweep the pulverized roadbed area constructed the previous day to remove loose material.

**301-8.3 Surface Preparation.** Before pulverized roadbed activities start, prepare the existing roadway surface by:

1. Clearing foreign matter including vegetation
2. Removing standing water
3. Referencing the profile and cross slope
4. Marking the proposed longitudinal cut lines on the existing pavement as follows:
   4.1. Cut lines must coincide with points where the existing cross slope changes, approximately at the centerline and edge of traveled way
   4.2. Cut lines must indicate the sequence of the cuts
5. Referencing existing lane lines and striping layout

Final pavement surface shall slope away from the street centerline to a maximum of 3% grade. Pulverized material must be used as base material to meet new cross slope requirements. Native sub-grade material may need to be hauled off to allow for the use of all the pulverized base material. No additional compensation will be allowed for any sub-grade removal and haul-off if required. Any contaminated material will be removed and disposed of by the contractor off site at his expense. Any shortage of material, caused by premature disposal of the indicated surplus material by the contractor, shall be replaced by it and no additional compensation will be allowed for such replacement.

**301-8.4 Spreading, Mixing, and Compacting.** Do not use a heating device to soften the pavement. Remove any visible oversized materials in the pulverized roadbed mixture before shaping and compacting. If you encounter unstable subgrade or rocks greater than 4 inches in the roadway section, notify the Engineer. The Engineer determines the extent of the unsuitable material and the corrective measures to be taken.

Recycling shall be performed to the depth provided in the plans, while incorporating stabilizing agents, mineral filler, additional aggregate and water. Mixing shall continue until, and the speed

of the recycling unit adjusted to ensure, a homogenous mixture of the above materials and pulverized materials is achieved. Pre-cutting, grading and light compacting of the recycled material shall be performed prior to incorporation of the stabilizing. Spread cement uniformly over the full roadway surface width. Do not spread cement more than 30 minutes before mixing. Do not apply dry cement in windy conditions that will result in dust outside the FDR with cement area. The application rate must be the mix design rate or the ordered application rate in lb/sq yd ± 0.5 percent. The application rate of all stabilizing agents shall be continuously monitored. If the measured application rate falls outside the above tolerance, then the recycling operations shall be stopped and corrected before proceeding. Do not spread cement and aggregate before pulverizing.

Water must be injected through the pulverizing machine. The injection rate of mixing water must be sufficient to produce the FDR with cement material mixing moisture content. The water content of the stabilized material shall be monitored closely to ensure proper compaction. Mark where the center of the pulverizing drum stops. Start the following cut on this alignment at least 2 feet behind the mark. Before compacting, remove solids larger than 3 inches in any dimension by hand.

Immediately after pulverizing and mixing, compact FDR with cement to the minimum relative compaction. Do not allow more than 2 hours between final mixing of the pulverized material with cement and completion of initial compaction before trimming. During grading and final compaction add water to maintain the mixing moisture content as described in the mix design. Do not allow more than 2 hours to elapse from the time water is added to the aggregate and cement to completion of final compaction after trimming.

Longitudinal joints between adjacent stabilization passes shall be overlapped at least 4 inches. Transverse joints between the recycling process shall be saw-cut, if necessary, to provide a vertical clean face to ensure proper compaction. Compaction of cementitious stabilizer begins within 20 minutes after mixing and achieving gradation and moisture requirements.

According to the Section 301-2.3, the compaction shall always be commenced along the edge of the area to be compacted and the roller shall gradually advance toward the center of the area to be compacted. Rollers shall be operated along lines parallel or concentric with the centerline of the road being constructed, and no material variation therefrom will be permitted. All rollers must be maintained in good mechanical and working condition.

The relative compaction of each layer of compacted base material shall not be less than 95 percent. ASTM D2922, Methods of Density of Soil and Soil Aggregate in Place by Nuclear Methods, (or ASTM D1556). After compaction, the sub-grade shall be firm, and unyielding.

Construction joints shall have vertical faces and shall be made in thoroughly compacted material. Additional mixture shall not be placed against the construction joint until the joint has been approved by the Engineer. The face of the cut joint shall be lean and free of deleterious material and shall be kept moist until the placing of the adjacent FDR with cement.

**301-8.5 Finishing.** Once the entire working width (full lane width plus effected shoulder width) has been stabilized, and only after primary compaction has been completed, the entire working

width shall be graded to the required profile and cross-slope. Disturbance to the stabilized and primary compacted material shall be kept to a minimum during this grading and shaping operation.

The finished pulverized roadbed surface must not vary more than 0.05 foot from the lower edge of a 12-foot straight edge laid in directions parallel and perpendicular to the centerline. Variations within the above specified tolerances shall be compensating so that the average grade and cross section specified are met. The finished surface must be free from segregation, tearing, and scarring, and have a uniform surface texture throughout the work limits.

Immediately after compaction, apply water and roll with no vibration. The finished surface must be free of ruts, bump, indentations, segregation, raveling, and any loose material.

The completed cement treated subgrade shall be moist cured continuously until it is in a firm and unyielding condition. The cement treated subgrade shall be kept free from heavy traffic during the curing period or until the asphalt concrete surfacing is placed whichever is less, unless otherwise directed by the Engineer. Moisture curing shall be the only method of curing prior to micro-cracking.

Micro-cracking shall be performed with several vibratory roller passes 48 to 72 hours after finish grading to prevent severe, wide cracks from forming thus reduces the potential for reflective cracking through the HMA layer. Micro-cracking shall be performed before the application of asphaltic emulsion curing seal. After micro-cracking is complete additional moisture curing may be used. Any additional water required to achieve maximum density shall be applied by spraying the surface of the stabilized material with light applications. Care shall be taken so as not to over-apply additional water to any areas of the stabilized material.

While open to traffic and before placing HMA, maintain the FDR with cement surface free of ruts, bumps, indentations, raveling, and segregation. If FDR with cement material is damaged, it shall be repaired by removing and replacing the entire depth of affected layers in the damaged area. Feathering will not be permitted for repair of low areas.

Asphaltic emulsion curing seal must be applied on the completed cement treated base immediately before placing HMA. Asphaltic emulsion curing seal must comply with Caltrans Standard Section 94, Grade SS1 or CSS1. Dilute and thoroughly mix asphaltic emulsion for curing seal at a ratio of 1 part water to 1 part asphaltic emulsion. The water must no cause premature separation of the emulsion. Uniformly apply the diluted curing seal at a rate of 0.1 gal/yd2 of cement treated base surface.

## SECTION 302 - ROADWAY SURFACING

### 302-4 SLURRY SEAL SURFACING.

**302-4.3.1 General.** – *Add the following paragraphs:*
All slurry mixing machines shall be equipped with a Fines Feeder for the adding of cement or granular Aluminum Sulfate.

Prior to the beginning of slurry operations, the Contractor shall furnish, at no cost to the City, current licensed weigh master's certificates indicating the net weight capacity of the aggregate bin. The Contractor shall provide a drive upon scale at the project site or an alternate site approved by the City. The drive on scale shall show the net weight of the aggregate bin on each slurry machine before the machine and product will be approved for applying slurry on the project.

All slurry machines are to carry, at all times, a calibrated emulsion measuring stick. The emulsion measuring stick is to be calibrated in 10-gallon increments to the slurry machine it is used on. Emulsion measuring sticks from other slurry machines will not be allowed to measure the gallons of emulsions on the slurry machines they were not calibrated to. The emulsion measuring stick is to have the slurry machine number or identification permanently marked on the stick. The gallons of emulsion are to be measured with a calibrated emulsion measuring stick and recorded before leaving and after returning to materials site. Use of a slurry machine will not be allowed if it does not have a calibrated emulsion measuring stick.

The Contractor shall furnish prior commencing work, a calibrated stick in 10-gallon increments to measure the oil in the trailer storage tanks in gallons. The measuring stick shall be calibrated to the trailer storage tank it is used on. The inspector shall check the oil in each load "in and out" and in the storage tanks at the beginning and end of each day to determine the amount of emulsion used for that day. Emulsion is not to be transferred from delivery tank to on-site storage tank before the City performs the sieve analysis on the emulsion. Aggregate used in the slurry shall not exceed a moisture content of four percent (4%) by weight of dry aggregate.

Contractor may not schedule more than 150 tons of slurry to be placed per day. Slurry may not be applied at more than 150 feet per minute.

The Contractor shall provide a self-propelled 10 ton pneumatic roller with a tire pressure of 50 PSI and equipped with a water spray system. The Contractor shall roll the required streets the same day they are slurried. The Contractor will be responsible for proper scheduling of the work such that the rolling can be properly done within the given time constraint. Failure to comply shall result in a $250.00/calendar day liquidated damage being assessed per incident. The cost of furnishing the roller and operator shall be included in the price paid for slurry seal.

The Contractor is hereby advised that City streets, parking lots, or other City-approved property will not be allowed as a site for stockpiling and batching. Arrangements for an acceptable site shall be the sole responsibility of the Contractor.

The Contractor shall sweep any raveled material on the street one (1) week after the initial placement. If the Engineer determines the raveling is excessive, the frequency of sweeping shall be adjusted to the field conditions of the raveling. If raveling continues within two (2) weeks of the initial placement, the street shall be swept and reslurried with a Type I mixtures (Local Streets) or a Type II (Arterial/Collector Streets) at no cost to the City. Raveling can be identified by the presence of "black pebbles" in the gutter.

The Contractor shall remove any and all weeds that are growing through cracks from the project street located within the pavement or growing between the concrete gutter and the pavement and spray a herbicide mixture of either Hyvar mixed with Roundup or Pramatol mixed with Roundup, or approved equal, at least fourteen (14) calendar days prior to slurrying. The herbicide mixture

shall contain Blazon, or approved equal, a purple dye to easily confirm the herbicide has been applied. The work shall be approved by the Engineer or his representative prior to slurrying. Full compensation for plant removal and herbicide treatment shall be considered as included in the unit cost for slurry seal.

Longitudinal joints must correspond with lane lines. You may request other longitudinal joint patterns if they do not adversely affect the slurry seal. Spread slurry seal in full lane widths. Do not overlap slurry seal between adjacent lanes more than 3 inches. Use a material, such as building paper at transverse joints and over previously placed slurry seal to prevent double placement. Remove the material after use. Use hand tools to remove spillage.

Full compensation for developing a water supply, for furnishing and placing all water required for work done in the Contract, including extra work shall be included in the prices paid for the various items of work requiring water; and no separate payment will be made therefore. The Contractor shall supply the City with licensed weighmaster's certificates of weight for all delivered aggregates to the job during the course of each day. Aggregate shall be delivered to the project only in the presence of a City representative. The Contractor shall also present weighmaster certificates for the amount of such aggregate remaining at the completion of the project at no cost to the City. Payment shall be determined by the amount that is physically placed, which cannot exceed the amount that is delivered to the job site with the certified weighmaster tickets. There shall be not outside work done utilizing materials from the tanks or stockpiles stored for the City's Contract.

Prior to storing aggregate on private property, the Contractor shall submit to the Engineer written permission from the property owner for such stockpiling.

Precautions shall be taken to ensure that stockpiles do not become contaminated with oversized rock, clay, silt, or excessive amounts of moisture. The stockpiles shall be kept in areas that drain readily. Segregation of the aggregate will not be permitted.

The Contactor shall protect the wet slurry from traffic at all times and if damaged or defaced, the Contractor shall repair said damage at no additional cost to the City.

The placement of slurry seal may be suspended with the concurrence of the Engineer due to unsuitable weather, temperature conditions, or other conditions that are considered unfavorable for the prosecution of the work. The Contractor shall immediately comply with the order of suspension by the Engineer, and work shall not be resumed until authorized by the Engineer.

**302-4.8 Spreading and Application. -** *Add the following paragraphs:*
Prior to applying slurry seal, the Contractor shall clean, to the satisfaction of the Engineer, the street surface with a power sweeper, remove all R.P.M.'s, abrasive grind or sandblast completely all lane lines, street legends, crosswalks or other painted or thermoplastic surfaces. This is necessary to provide a good bonding surface for the slurry seal, as well as eliminate "ghosting" of the old striping and markings as the new slurry wears off over time.

It is anticipated that nuisance water, such as storm water runoff and irrigation water, will run in and across the right-of-way at various time throughout the period of construction. It shall be the responsibility of the Contractor, at their own expense, to provide for and protect the work from such water. In addition, the Contactor's responsibility shall include handling nuisance waters such that their operations do not cause them to damage existing improvements or properties adjacent to or near the site of work.

Slurry shall not be applied when the atmospheric temperature is less than 65ºF (18ºC).

The application of slurry shall not commence until after 8:00 a.m., and shall conclude at 1:30 p.m. unless other authorized by the Engineer. The slurry shall be sufficiently cured to be open to traffic by 4:00 p.m. The portions of streets to be slurried shall be closed from the time the application begins until the mixture as achieved sufficient set to be opened to traffic.

The slurry shall be applied in such a manner that no ripples or waves exist. If ripples or waves occur in the slurry during the application, the work shall cease and the Contractor shall correct the situation. The Contractor may use a drag to knock down ridges. If ripples or waves are not corrected to the Engineer's satisfaction, the street shall be reslurried at the Contractor's expense.

The Contractor shall, at the direction of the Engineer, repair the reseal to the entire street, or complete section thereof, as determined by the Engineer, which have not been sealed properly (includes areas that have failed to meet yield and mix design specifications) and completely. No compensation will be provided for slurry seal used in repair and reseal work.

Each slurry crew shall be composed, at a minimum, of a coordinator at the project site at all times, a competent quick-set mixing man, a competent driver, two squeegee men, and sufficient laborers for any handiwork and cleanup.

Surface oil and grease shall be removed or sealed with shellac or an equivalent material approved by the City before the application of the slurry seal. Full compensation for surface oil and grease removal shall be considered as included in the unit cost for slurry seal.

The Contractor shall roll all cul-de-sacs (the last 250' minimum), the last 250' of dead-end streets and knuckle curves. Full compensation for rolling the slurry shall be considered as include in the unit cost for slurry seal.

During slurry seal operations, it shall be the Contractor's responsibility to place protective covering over, or to otherwise avoid slurry seal coating of manholes, utility covers, pavement markers (reflective and non-reflective), concrete gutters, concrete cross gutters, and drainage facilities, survey monuments and remove said covering and/for slurry seal coating after slurry sealing has been completed.

The start and finish of slurry application shall be a straight line which, unless otherwise approved by the Engineer, shall be obtained by laying a strip of building paper or other material approved by the Engineer on the pavement surface. After application of slurry, the paper is to be removed leaving a straight edge. The entire street surface area shall be sealed the same day.

**302-4.8.1 Crack Sealing and Filling.** Crack sealing shall be performed prior to the Slurry Seal application. Pavement cracks 1/4" wide and larger shall be sealed. Pavement cracks 1/8" to 1" wide shall be cleared of all loose particles of dust, dirt and laitance with oil-free compressed air immediately preceding the sealing operation. Cracks shall be routed out as necessary to provide a reservoir for the sealer that will have a depth of l" to 1 1/2".

The crack sealing material shall be a hot-applied asphalt (Crafco Polyflex or approved equivalent). The crack sealing material must not be modified or diluted in any way. Pavement cracks larger than 1" wide shall be filled with the mixtures per Specification Section 203-6.4 Type E (Extra Fine).

A wand and nozzle type application shall be used to fill all cracks with crack sealing material. Crack sealing material shall be applied in two applications with the possibility of additional applications to fill the crack within the allowable tolerance. The cracks must be filled to the surface and not overfilled or applied to the top of adjoining pavement or concrete surfaces. The cracks shall be squeegee immediately after the sealant has been applied to insure conformity with the pavement surface.

The crack sealing material shall then be allowed to penetrate and sink into the crack area for a minimum of one hour. Each crack must then have a second application of crack sealer material applied in the crack area only to within + 0.01' of the adjoining pavement surface. If the material is a cold-applied, polymer modified petroleum emulsion, sand will be applied over the crack sealing material after the second application, covering a minimum of 1 1/2 inches each side of the crack and not more than 3/4 inch higher than the top of the pavement. The contractor shall be responsible for the removal of all excess sand which shall be removed within three hours after being applied.

## 302-5 ASPHALT CONCRETE PAVEMENT.

**302-5.1 General. -** *Add the following paragraphs:*
Asphalt concrete pavement structural sections equal to or greater than 3 inches (76 mm) in thickness shall be installed in two lifts. Base course aggregate material size shall be ¾ inch (19 mm) and cap course aggregate material size shall be ½ inch (13 mm). All pavement shall be placed over 4 inches of crushed aggregate base, unless compacted to 95% relative compaction.

All valves within project limits in the public right-of-way shall be raised to finish grade as a part of this work. The Contractor shall furnish and install new can or slip can materials as necessary. If new water valve lids are necessary, they shall be supplied by the Municipal Utilities and Engineering Department. All valve can lids within the project limits in the public right-of-way shall be painted the appropriate color for the utility they represent (ie. Water - Blue, Gas - Yellow, Fire – Red, etc.).

**302-5.2 Timeline of Paving Operations.**
All paving operations shall follow the timeline and requirements shown below unless otherwise approved by the City:

| PAVING TIMELINE | | | | |
|---|---|---|---|---|
| DESCRIPTION OF WORK | TIME PERIOD | | | |
| | WEEK 1 (DAY 1-7) | WEEK 2 (DAY 8-14) | WEEK 3 (DAY 15-21) | WEEK 4 (DAY 22-28) |
| PAVING (START TO FINISH) (1) | | | | |
| CURE PERIOD (2) | | | | |
| MANHOLE ADJUST TO GRADE (3) | | | | |
| STRIPING & PAVEMENT MARKINGS (4) | | | | |
| TRAFFIC LOOPS (5) | | | | |
| NO PARKING SIGNS ALLOWED (6) | | | | |

Note: All time periods shown above are the maximum amount of allowable time for each activity. This timeline does not apply to the installation or repair of curb and gutter, ac dikes, sidewalks, cross gutters, curb ramps, driveway approaches or truncated domes.

(1) In no case shall any street segment remain unpaved longer than three calendar days if no other work activity is being performed on that street segment. Any deviation from the timeline shall result in a penalty assessment of $1,000 per calendar day.
(2) No work except cat tracking of proposed striping is allowed during this period; therefore "No Parking Signs" shall not be installed during this activity.
(3) Once each manhole is exposed, all associated work to adjust it to grade must be completed within 48 hours. This shall include all adjustments of manholes, vaults, valve cans, etc. as required by the Contract.
(4) All cat tracking and approval of proposed striping shall occur during the cure period.
(5) Traffic loops must be installed after the approval of striping layout and prior to the installation of thermoplastic striping and pavement markings.
(6) "No Parking Signs" shall be installed per Section 7-19 of these specifications.

**302-5.4 Tack Coat. –** *Delete and replace with the following:*
If the asphalt concrete pavement is being constructed directly upon an existing hard-surfaced pavement, a tack coat of High Performance Seal (HPS) No-Track Tack at an approximate rate of 0.05 gallon per square yard shall be uniformly applied upon the existing pavement preceding the placement of asphalt concrete. The surface shall be free of water, foreign material, or dust when the tack coat is applied. To minimize public inconvenience, no greater area shall be treated in any one day than is planned to be covered by asphalt concrete during the same day, unless otherwise approved by the Engineer.

**302-5.5 Distribution and Spreading.** – *Add the following:*
Unless otherwise permitted by the Engineer, the top layer of asphalt concrete for shoulders, tapers, transitions, road connections, private drives, curve widening, turnouts, left-turn pockets, and other such areas, shall not be spread before the top layer of asphalt concrete for the adjoining through lane has been spread and compacted. At locations where the number of lanes are changed, the top layer for the through lanes shall be paved first. Tracks or wheels of spreading equipment shall not be operated on the top layer of asphalt concrete in any area until final compaction has been completed or unless directed by the Engineer.

All screed extensions for paving machines shall be provided with a tamper, roller, or other suitable compacting devices.

Asphalt pavers shall be equipped with automatic screed controls and a sensing device or devices. Automatic grade and slope control shall be used for overlays.

All joints shall be sealed after rolling.

When placing asphalt concrete to the lines and grades noted in the plans or as approved by the Engineer, the automatic screed controls shall control the longitudinal grade and transverse slope of the screed. Grade and slope references shall be furnished, installed, and maintained by the Contractor. The Contractor shall use a ski device, the minimum length of the ski device shall be 30 ft. The ski device shall be a rigid one-piece unit and the entire length shall be utilized in activating the sensor. The Contractor may use a laser to control the screed.

When placing the initial mat of asphalt concrete on existing pavement, the end of the screed nearest the center line shall be controlled by a sensor activated by a ski device not less than 30 ft long. The end of the screed farthest from center line shall be controlled by an automatic transverse slope device set to reproduce the cross slope approved by the Engineer.

When paving contiguously with previously placed mats, the end of the screed adjacent to the previously placed mat shall be controlled by a sensor that responds to the grade of the previously placed mat and will reproduce the grade in the new mat within a 0.01 ft. tolerance. The end of the screed farthest from the previously placed mat shall be controlled in the same manner as when placing the initial mat.

Should the automatic screed controls fail to operate properly during any day's work, the Contractor may use manual control of the spreading equipment for the remainder of that day; however, the equipment shall be corrected or replaced with alternative automatically controlled equipment conforming to the requirements in this section before starting the next day's work.

Should the methods and equipment furnished by the Contractor fail to produce a layer of asphalt concrete conforming to the requirements, including straightedge tolerance, of Subsection 302-5.6.2 - Density and Smoothness, of the Standard Specifications, the paving operation shall be discontinued and the Contractor shall modify his equipment or furnish substitute equipment. A

drop-off of more than 0.15 ft will not be allowed at anytime between adjacent lanes open to public traffic.

The Contractor shall schedule his paving operations such that each layer of asphalt concrete is placed on all contiguous lanes of a traveled way each work shift. At the end of each work shift, the distance between the ends of the layers of asphalt concrete on adjacent lanes shall not be greater than 10 ft. nor less than 5 ft. Additional asphalt concrete shall be placed along the transverse edge at the end of each lane and along the exposed longitudinal edges between adjacent lanes, hand raked, and compacted to form temporary conforms. Kraft paper, or other approved bond breaker, may be placed under the conform tapers to facilitate the removal of the taper when paving operations resume.

**302-5.6.1 General. -** *Add the following paragraph:*
All asphalt concrete pavement abutting portland cement concrete gutters shall match and be flush with the gutter lip when finish rolling is complete.

**302-5.6.2 – Density and Smoothness.** – *Delete and replace with the following:*
The completed surfacing shall be thoroughly compacted, smooth and free from ruts, humps, depressions or irregularities. Any ridges, indentations or other objectionable marks left in the surface of the asphalt concrete shall be eliminated by rolling or other means. The use of any equipment that leaves humps, ridges, irregularities or other objectionable marks in the asphalt concrete shall be discontinued, and acceptable equipment shall be furnished by the Contractor.

The finished surface shall meet the following smoothness criteria:

- When a 12 foot long straightedge is laid on the finished surface parallel to the centerline of the roadway, the finished surface shall not vary from the edge of the straightedge more than 0.05 feet, except at changes in grade,
- When a 12 foot long straightedge is laid on the finished surface perpendicular to the centerline of the roadway and extends from edge to edge of a traffic lane, the finished surface shall not vary from the edge of the straightedge more than 0.05 feet, except at changes in grade.

If the top layer of pavement does not comply with the smoothness specifications shown, remove and replace the entire section or complete a grind and overlay of 1.5 inches or 3 times the aggregate size, whichever is greater. Grind and overlay will be considered as a repair method only when the thickness of the asphalt pavement section is greater than 1.5 inches following the required grinding. Corrected section shall be rectangular to the nearest pavement edge or lane line and to a crosswalk, concrete spandrel or other limits approved by the City. Do not begin corrective actions until the method and limit of correction is authorized by the City. If the tolerances cannot be achieved by the methods described above, the contractor must re-pave the street section, in kind, at their own expenses.

The compaction after rolling shall be a minimum of 91 percent and a maximum of 97 percent of the density obtained on samples compacted with the California Kneading Compactor per California Test 304. Cores will be taken randomly by the City for laboratory testing per California Test 308, Method A at a frequency of three per lot. A lot shall consist of a maximum of 3,000 square yards of asphalt concrete and will be identified in the field by the City. The cores will be

averaged to determine the percent of maximum theoretical density, as determined by ASTM D-2041, per lot to the nearest tenth of a percent.

Reduced payment factors for percent of maximum theoretical density will be per the following table, and will be applied to the entire lot sampled.

**Reduced Payment Factors for Percent of Maximum Theoretical Density**

| Asphalt Concrete percent of maximum theoretical density | Reduced payment factor | Asphalt Concrete percent of maximum theoretical density | Reduced payment factor |
|---|---|---|---|
| 91.0 | 0.0000 | 97.0 | 0.0000 |
| 90.9 | 0.0125 | 97.1 | 0.0125 |
| 90.8 | 0.0250 | 97.2 | 0.0250 |
| 90.7 | 0.0375 | 97.3 | 0.0375 |
| 90.6 | 0.0500 | 97.4 | 0.0500 |
| 90.5 | 0.0625 | 97.5 | 0.0625 |
| 90.4 | 0.0750 | 97.6 | 0.0750 |
| 90.3 | 0.0875 | 97.7 | 0.0875 |
| 90.2 | 0.1000 | 97.8 | 0.1000 |
| 90.1 | 0.1125 | 97.9 | 0.1125 |
| 90.0 | 0.1250 | 98.0 | 0.1250 |
| 89.9 | 0.1375 | 98.1 | 0.1375 |
| 89.8 | 0.1500 | 98.2 | 0.1500 |
| 89.7 | 0.1625 | 98.3 | 0.1625 |
| 89.6 | 0.1750 | 98.4 | 0.1750 |
| 89.5 | 0.1875 | 98.5 | 0.1875 |
| 89.4 | 0.2000 | 98.6 | 0.2000 |
| 89.3 | 0.2125 | 98.7 | 0.2125 |
| 89.2 | 0.2250 | 98.8 | 0.2250 |
| 89.1 | 0.2375 | 98.9 | 0.2375 |
| 89.0 | 0.2500 | 99.0 | 0.2500 |
| < 89.0 | Remove and replace | > 99.0 | Remove and replace |

In addition to the reduced payment factors below, all costs associated with the testing of the lot which resulted in values outside of the 91-97 percent range, will be withheld from the final payment due to the Contractor.

Following completion of the testing by the City, the core locations within the asphalt pavement shall be repaired by the Contractor.

**302-5.6.3 Tracking.** All areas receiving asphalt pavement shall be protected from tracking onto adjacent areas. Do not allow traffic on new asphalt pavement until its mid-depth temperature is below 140º Fahrenheit to minimize the tracking.

A rock dust blotter coat per Section 302-9.7 or a sand coat at a rate of 1-2 pounds per square yard shall be applied to the compacted surface for all areas where tracking is a concern. The application of tracking prevention measures shall be determined by the Contractor.

A haul route for all paving operations shall be reviewed and approved by the City prior to the start of any construction activity. No deviations from the approved haul route shall occur unless approved in writing from the City.

All tracking onto adjacent streets, striping or pavement markings shall be the responsibility of the Contractor. All striping and pavement markings shall be removed and replaced in kind by sandblasting. All tracking onto roadway surfaces may require the use of a street sweeper to the satisfaction of the City.

**302-5.7 Joints. –** *Add the following:*
Longitudinal joints shall be trimmed to a vertical face and to a neat line if the edges of the previously laid surfacing are, in the opinion of the Engineer, in such condition that the quality of the completed joint will be affected. Longitudinal and transverse joints shall be tested with a 12' straightedge and shall be cut back as required to conform to the provisions in Subsection 302-5.6.2 Density and Smoothness for surface smoothness. Connections to existing surfacing shall be feathered to conform to the provisions for smoothness.

Longitudinal joints in the top layer shall correspond with the edges of proposed lane striping. Longitudinal joints in all other layers shall be offset not less than 0.5' alternately each side of the edges of traffic lanes.

All feathered joints shall be sealed after rolling.

**302-5.9 Measurement and Payment. –** *Add the following:*
Reduced payment factors per 302-5.6.2 will be applied to the Contract Unit Price for lots with a Maximum Theoretical Density less than 91.0 and greater than 97.0 percent.

**302-5.10 Hot Asphalt Leveling Course.** Areas to receive the Hot Asphalt Concrete Leveling Course shall be determined and defined by the project manager and inspector, and identified to the Contractor in the field. Mix for hot Asphalt Concrete Leveling Course shall be 1/2 inch aggregate, C2, as defined in Section 203-6.4.3.

Areas to receive hot asphalt concrete leveling course shall be areas located near or adjacent to existing curbs and/or gutters that are potholed, or have the lip of gutter higher than the adjacent roadway. Potholes, large cracks, or ruts shall be filled to the surrounding grade elevation and compacted. Hot Asphalt Concrete Leveling Course shall be completed prior to the placement of Type II Slurry Seal, ARAM or resurfacing.

Prior to placement of asphalt concrete, the surface shall be cleaned and all debris and deleterious materials shall be removed. A tack coat meeting the material and application requirements of Section 302-5.4 Tack Coat, shall be applied prior to placement of hot mix asphalt concrete.

**302-5.11 Asphalt Pavement Crack Sealing and Filling.** Crack sealing shall only be performed as a repair method for conventional hot mix asphalt pavement (HMA) and not installed at project locations which will have asphalt rubber hot mix (ARHM) used as the overlay material. Crack

sealing shall be performed after milling of existing asphalt surface and prior to any leveling course, if necessary.

Right after milling of existing asphalt and before crack sealing or filling, Contractor shall remove any and all weeds that are growing through cracks from the project street located within the pavement or growing between the concrete gutter and the pavement and spray a herbicide mixture of either Hyvar mixed with Roundup or Pramatol mixed with Roundup, or approved equal, at least seven (7) calendar days prior to paving. The herbicide mixture shall contain Blazon, or approved equal, a purple dye to easily confirm the herbicide has been applied. The work shall be approved by the Engineer or his representative prior to paving. Full compensation for plant removal and herbicide treatment shall be considered as included in the unit cost for paving.

The crack sealing material shall be a hot-applied asphalt (Crafco Polyflex or approved equivalent). The crack sealing material must not be modified or diluted in any way. Pavement cracks larger than 1" wide shall be filled with the mixtures per Specification Section 203-6.4 Type E (Extra Fine).

A wand and nozzle type application shall be used to fill all cracks with crack sealing material. Crack sealing material shall be applied in two applications with the possibility of additional applications to fill the crack within the allowable tolerance. The cracks must be filled to the surface and not overfilled or applied to the top of adjoining pavement or concrete surfaces. The cracks shall be squeegee immediately after the sealant has been applied to insure conformity with the pavement surface.

The crack sealing material shall then be allowed to penetrate and sink into the crack area for a minimum of one hour. Each crack must then have a second application of crack sealer material applied in the crack area only to within + 0.01' of the adjoining pavement surface. If the material is a cold-applied, polymer modified petroleum emulsion, sand will be applied over the crack sealing material after the second application, covering a minimum of 1 1/2 inches each side of the crack and not more than 3/4 inch higher than the top of the pavement. The contractor shall be responsible for the removal of all excess sand which shall be removed within three hours after being applied.

## SECTION 303 - CONCRETE AND MASONRY CONSTRUCTION

### 303-1 CONCRETE STRUCTURES.

**303-1.1 General. -** *Delete the first sentence of paragraph 1 and replace with the following:*
"Concrete bridges, culverts, catch basins, retaining walls, abutments, piers, footings, foundations, drainage inlets, head walls, end walls, wing walls, junction structures, transition structures, manholes, and other similar types of portland cement concrete structures shall be constructed to the lines and grades in conformity with the Plans and Specifications.

### 303-5 CONCRETE CURBS, WALKS, GUTTERS, CROSS GUTTERS, ALLEY INTERSECTIONS, ACCESS RAMPS, AND DRIVEWAYS.

**303-5.1.1 General.** - *Replace the last paragraph with the following:*

No PCC shall be ordered and/or placed until the forms and subgrade have been inspected and approved by the Engineer in the field.

All pull boxes, water meter boxes, and water valve covers shall be adjusted to proposed finish grade and approved by the Engineer in the field prior to placement of the PCC.

The Contractor shall barricade and protect placed PCC from all damage, marks, mars, and/or graffiti. Any PCC damaged, defaced, discolored, or defective shall be replaced at the Contractor's expense.

When removals of curb and/or sidewalk are located at curb return, the Contractor shall install access ramps. The Contractor is to construct all access ramps in accordance with American Disability Act (ADA) Standards/California Code of Regulations Title 24 – Accessibility Regulations. If the ramps constructed by the Contractor are found to be in non-compliance with ADA Standards, the Contractor will be required to remove and replace the ramps to ADA Standards at the Contractor's expense.

**303-5.1.2 Drainage Outlets Through Curb.** - *Add the following paragraph*:
Coring shall be required for all drains through existing curbs.

**303-5.1.3 Driveway Entrances.** – *Replace the last paragraph with the following:*
Driveway approaches where required, shall be 150 mm (6") thick for single-family residential area, and 200 mm (8") thick for commercial driveway approaches.

**303-5.1.4 Walk.** The back of sidewalk shall be 2 inches from the street Right-of-Way line unless otherwise specified by the Engineer.

Included in the price of sidewalk construction are retaining curbs. Retaining curbs are needed to retain soils from sloughing and eroding onto the finished sidewalk surface, as a result of grade differentials from existing ground surface to proposed sidewalk surface. Retaining curbs shall be installed when the finished surface is lower than the surrounding grade by 3 inches vertically within 6 inches horizontally. If the vertical difference in elevation is less than 3 inches, the surrounding grade shall be sloped, maximum 2:1 slope, to match the finished elevation. The height of the retaining curb shall be to the height of the existing grade it is retaining. Retaining curbs shall be located within the City's right-of-way at all times.

**303-5.1.5 Access Ramps.** Construction of curb ramps shall conform to the Type and Case appropriate for the condition, as specified on the plans and as shown within the 2012 Standard Plans for Public Works Construction, Plan 111-5. The Contractor shall be responsible to layout the proposed access ramp to comply with the maximum slope indicated on the plans or Standard Plan 111-5. The maximum slope for the ramp shall not be exceeded unless otherwise approved in writing by the Engineer. The Contractor shall remove and replace access ramps deemed non-compliant with the plans or Standard Plan 111-5.

For proposed locations adjacent to a cross gutter spandrel, sawcuts along the radius of the curb will not be allowed. The spandrel shall be replaced from expansion joint to expansion joint to the extents of the curb removal. For proposed locations adjacent to curb and gutter, sawcuts along the flowline of the curb will not be allowed. The entire curb and gutter shall be replaced from expansion joint to expansion joint as required. Sawcuts at locations other than the expansion joint

will not be allowed unless approved by the Engineer. Curb cuts of the existing curb will not be permitted for installation of proposed ramp. Any deviation from these requirements will result in rejection of all work at this location and shall not be included in progress payment requests until corrected, per direction from the Engineer.

The Contractor shall verify the extents of sawcut and removal for each access ramp taking into account the maximum slope and transition area required. It shall be the Contractor's responsibility to identify required removal limits, set concrete forms and verify maximum slopes are not exceeded. The Engineer shall be present to verify the concrete forms prior to the placement of the concrete at each location, however this does not alleviate the responsibility of the accuracy of forms or slopes of the access ramp from the Contractor.

Included in the price of access ramps are retaining curbs. Retaining curbs are needed to retain soils from sloughing and eroding onto the finished ramp surface, as a result of grade differentials from existing ground surface to proposed ramp surface. Retaining curbs shall be installed when the finished surface is lower than the surrounding grade by 3 inches vertically within 6 inches horizontally. If the vertical difference in elevation is less than 3 inches, the surrounding grade shall be sloped, maximum 2:1 slope, to match the finished elevation. The height of the retaining curb shall be to the height of the existing grade it is retaining. Retaining curbs shall be located within the City's right-of-way at all times.

Access Ramps shall have truncated domes installed in accordance with standard plans and specifications. Truncated domes on new access ramps shall be Armor-Tile, Cast in Place System, Equal Tile, or approved equal. Truncated domes installed on existing surfaces shall be Safety Sted TD, or approved equal. Truncated dome panels shall be 36"x48", inline configuration, with a spacing of 2.35" on center, and Federal Yellow in color.

The access ramp work shall include all related adjustments of pull boxes, pull box covers, signs, and protection of any underground utilities within the work area. The removal and replacement of up to 5 linear feet of sidewalk on each side of the access ramp shall be included within the cost of the access ramp. The removal and replacement of the sidewalk will allow for transition from the top of ramp to adjacent sidewalk and will be utilized as necessary.

**303-5.4.3 Weakened Plane Joints, (a) General.** - *Add the following paragraph:*
All weakened plane joints shall be spaced at a maximum of 3.05 m (10') feet for curbs, gutters, and sidewalks. Scoring lines shall conform to those prevailing in the area and be uniform in spacing.

**303-5.5.2 Curb.** - *Replace the first paragraph with the following:*
PCC for curb and gutter shall be placed within three working days from removal of the existing PCC curb and gutter. The curb and gutter surface shall not vary more than 3 mm (0.01') from a 3 m (10') straightedge except at the grade changes. Prior to the removal of the forms, the surface shall be finished true to grade by means of a straightedge float of not less than 3 m (10') in length, and operated longitudinally over the surface of the concrete. Form clamps shall be constructed so as not to interfere with the operation of the float. The form on the front of the curbs shall not be removed less than one (1) hour, nor more than six (6) hours after the concrete has been placed. In no event shall forms be removed while the concrete is sufficiently plastic to slump. The top and

face of the finished curb shall be true and straight, and top surface of curbs shall be of uniform width, free from humps, sags, blemishes, or other irregularities.

**303-5.5.3 Walk.** - *Add the following paragraphs:*
The sidewalk surface shall not vary more than 5 mm (0.02') from the 3m (10') straightedge except at grade changes, and the finished surface shall be free from humps, sags, blemishes or other irregularities. All sidewalks shall be a minimum of 100 mm (4") thick, except at driveways where the sidewalks shall be a minimum of 150 mm (6") thick for single family residential areas and 200 mm (8") thick for all other areas.

**303-5.6 Curing.** - *Add the following paragraph:*
Curing compound shall be translucent with red fugitive dye, Type 1, in accordance with Section 201-4 Concrete Curing Compound, of the Standard Specifications.

**303-5.7 Repairs and Replacements.** - *Add the following paragraphs:*
In order to minimize vandalism damage to the finished PCC surfaces, the Contractor shall plan his work so that no PCC is poured after 1:00 p.m., unless otherwise authorized by the Engineer in the field.

The Contractor shall barricade and protect placed Portland Cement Concrete from all damages, marks, mars, and/or graffiti. Any Portland Cement Concrete damaged, defaced, discolored, or defective shall be replaced to the satisfaction of the Engineer at the Contractor's expense, and no additional time will be allowed.

Grading, patching, or other remedies to correct the situation will not be accepted unless in the opinion of the Engineer the vandalized area is so small that it does not warrant replacement. Concrete replacement areas shall be from score mark or control joint to score mark or control joint, and full width of the sidewalk. All replacement areas shall be saw cut.

**303-5.8 Backfilling and Cleanup.** - *Add the following paragraph:*
A minimum of 300mm (12”) wide full depth asphalt concrete pavement repair patch and an 450mm (18”) wide 1-1/2” deep grind outside of the trench width is required when cross gutter, spandrel, driveways, curb and gutter is placed adjacent to existing asphalt concrete pavement. The asphalt concrete pavement repair patch shall be placed within two (2) working days after the cross gutters, spandrels, driveways, curb and gutter are replaced. The asphalt concrete pavement shall be sawcut. All work shall be in accordance with the General Permit Conditions and Trench Specifications, latest edition.

## SECTION 304 - METAL FABRICATION AND CONSTRUCTION

### 304-3 CHAIN LINK FENCE.

**304-3.4 Measurement and Payment. -** *Delete paragraph 1 and replace with:*
Chain link fence will be measured along the horizontal projection line of the completed fence, deducting the widths of gates and openings.

# SECTION 314 - TRAFFIC STRIPING, CURB AND PAVEMENT MARKINGS, AND PAVEMENT MARKERS

**314-1 GENERAL. -** *Add the following paragraphs:*
To insure the protection of storm drain inlets, Best Management Practices (BMPs) shall be employed during all striping operations. Refer to Section 7-8.6.

Each storm drain catch basin or storm drain inlet box shall be marked "NO DUMPING - FLOWS TO CREEK." Two coats of paint are required. Stencil shall match City's stencil. Paint and painting shall comply with the specifications.

All street resurfacing work shall include installing fire hydrant pavement markers at all fire hydrant location, whether the pavement markers were existing or not. The pavement markers shall be Type I – Two-Way Blue Retroreflective per Section 214-6 of the Specifications and installed per City's detail drawing No. 102-0. All work associated with the installation of all new, or replacement of existing, fire hydrant pavement markers shall be included as noted within the specifications.

**314-4 APPLICATION OF TRAFFIC STRIPING AND CURB AND PAVEMENT MARKINGS.**

**314-4.1 General.** – *Add the following paragraphs:*
During construction, if traffic legends or lane striping are removed or paved-over for any reason, they shall be replaced immediately with temporary traffic legends or lane striping as directed by the City, and the Contractor shall place permanent traffic legends or lane striping at the end of the job or on completion of final paving. When permanent items are placed, they shall be complete markings, legends, or striping i.e.: if limit lines are disturbed, they shall be replaced to centerline or from curb to curb, whichever was existing; if a letter in a word is removed or covered, the entire word shall be replaced; and lane striping shall extend 75 feet beyond construction limits. All replacement markings, legends, or striping required to be replaced beyond the contract limits shown shall be at the cost of the Contractor and shall meet City standards. If existing striping or legends are to be removed on existing surfaces, they shall be sandblasted. Painting over striping or legends in lieu of removal will not be permitted. Pavement striping shall comply with the applicable provisions of Sections 214 and 314 of the Standard Specifications.

Where side streets with existing striping, markings and markers are encountered, striping, markings and markers shall be repainted and replaced for a minimum distance of 15 m (50 feet) from the crosswalk, stop bar or limit line.

**314-4.2 Control of Alignment and Layout.**

**314-4.2.1 General. -** Delete and replace with t*he following:*
The Contractor will be responsible for all layout of all striping. All striping, markings and markers shall be reinstalled in their existing locations unless otherwise shown on the plans. The Contractor shall be responsible to take appropriate measures and record the existing locations.

The Contractor shall verify all dimensions in the field prior to installation of pavement striping/marking layout (Cat-Track). Should field measurements differ from the plan, the Contractor shall immediately notify City staff. No Cat-Track marks shall be placed until discrepancies are resolved.

Cat-Track must be approved by City staff prior to the installation of permanent pavement striping/marking. Contractor shall notify City staff a minimum of 24 hours prior to installation of permanent pavement striping/marking to allow for inspection and approval. If approval of Cat-Track is not obtained by the Contractor, all work required to correct the striping/marking will be at the expense of the Contractor

Cat-Track marks shall be made in chalk. Paint for the purpose of Cat-Track is prohibited. If paint is used, the Contractor must remove the paint without damaging or visually deforming the pavement surface. If damage or visual deformity within the removal area occurs, in the opinion of City staff, the Contractor shall grind and overlay the entire segment with no additional compensation. The area of the grind and overlay shall be as required by City staff and shall be a minimum of 0.10' thickness.

All visible Cat-Track markings after the installation of the permanent striping/marking shall be removed without damage or visual deformity to the pavement surface. Any damage or visual deformity to the pavement shall be remedied as noted above.

**314-4.3.5 Application.** - *Amend the first sentence in paragraph 8 as follows:*
"Glass beads shall be applied at a rate of 0.6 to 0.8 kg of beads per liter (5 to 7 pounds of beads per gallon)."

**314-6 GREEN BIKE LANE.** Green bike lanes shall be installed per plan and conform to the technical specifications included within the contract documents and shall be Streetbond CL or approved equal.

THIS PAGE INTENTIONALLY LEFT BLANK

# GENERAL REQUIREMENTS

THIS PAGE INTENTIONALLY LEFT BLANK

# SECTION 01110 COORDINATION OF WORK

## PART ONE – GENERAL

### 1.1 SEQUENCING OF WORK

The Contractor shall submit the construction schedule in accordance with Section 01321 of these specifications. The Contractor shall determine the order of work based upon the Areas identified on the plan set and incorporate these into the schedule.

The Contractor shall arrange the schedule of work, but it must adhere to the following restrictions:

1. Vehicular access to the alleys may be restricted for up to two weeks to complete all clearing, earthwork, concrete, and paving operations, with specific prior written approval from the City's Engineer. The Contractor must provide both written and verbal notice to affected property owners and/or residents at least forty-eight (48) hours in advance of any access limitations. Stockpiling of materials or equipment within the alleys will not be permitted at any time. Alleys shall remain accessible during non-working hours to utility company vehicles at all times within two weeks duration.

2. Paving and related work must follow the timeline per Section 302-5.2 of the specifications.

3. Citywide events calendar shall be considered with the schedule for construction.

4. Construction around school zone shall be taken into consideration to avoid interference with the drop-off and pick-up times for each specific school.

5. All non-paving construction activities may be scheduled by the Contractor in any sequence; however, each activity must receive prior approval from the City.

6. Utilities projects (sewer & water) and paving project may be under construction concurrently. Detailed construction activities and construction schedule will be provided during weekly construction meetings.

### 1.2 UTILITY COORDINATION

During construction, if City owned utility facilities are damaged, contractor shall inform the City. City crew will respond within two hours and assess the condition, and perform any necessary remedial work as quickly as possible. No additional compensation will be granted to the contractor for any delay due to the damage and repair of the utility facility. Other utilities not owned by the City, contractor should notify and coordinate with the utility owner.

END OF SECTION

THIS PAGE INTENTIONALLY LEFT BLANK

# SECTION 01112 DESCRIPTION OF WORK

## PART ONE -- GENERAL

### 1.1 SUMMARY

A. The work to be done under this Contract includes the furnishing of project management, labor, materials, tools and equipment for the construction of the 2025 Alley Paving Improvement Project for the City of Redlands, all in accordance with the Contract Documents.

B. The following contract drawings are made a part of these Contract Documents:

| Title | Sheet No. |
|---|---|
| Title Sheet & Vicinity Map | 1 |
| General Notes, Construction Notes, Symbol Legend and Details | 2 |
| Alley 1 – North of San Bernardino Ave, from Alta St to Glover St | 3 |
| Alley 2 – North of Vine St, from Eureka Street to 4th Street | 4 |
| Alley 3 – North of Citrus Ave, from Redlands Blvd to Church St | 4 |
| Alley 4 – Northeast of Normandie Ct, from Clark St to Fern Ave | 5 |
| Alley adjacent to 1711 Washington Street | 5 |

### 1.2 GENERAL SCOPE OF WORK

A. Work In This Contract: Work in this Contract includes all labor, materials and equipment necessary for construction of the 2025 Alley Paving Improvement Project as noted on the Contract Drawings and all other Contract Documents and is summarized as follows:

1. The Work shall consist of paving various alleys throughout the City. The scope of work also includes removal and replacement of driveways and sidewalks where necessary; protecting in place all existing utilities, trees, power poles, and public and private improvements; replacing destroyed survey monuments; constructing concrete v-gutters; disposing of excess soil and rock material and restoring all areas and improvements to pre-construction conditions.

2. The Contractor shall, upon completion of the Alley Paving Improvements and appurtenances required herein, initially operate all components of the Contract Work furnished and installed by Contractor, and make any additional adjustments, corrections, repairs, replacements, and reconstructions necessary to provide the City with complete Alleys and appurtenances, including restoring all areas to pre-construction conditions.

END OF SECTION

THIS PAGE INTENTIONALLY LEFT BLANK

# SECTION 01200 MEASUREMENT AND PAYMENT

A. Work Listed in the Schedule of Work Items

**1.** The application for payment will be for a specific item based on the percentage completed or quantity installed. The percentage complete will be based on the value of the partially completed work relative to the value of the item when entirely completed and ready for service.

**2.** A retention of five percent (5%) of the value of work completed will be withheld from progress payments. This retention amount will remain constant throughout the contract period, and will not be payable until the expiration of thirty-five (35) days after the recordation of the Notice of Completion.

B. Work Not Listed in the Schedule of Work Items

The General Conditions and items in the General Requirements, and Specifications which are not listed in the schedule of work items of the bid form are, in general, applicable to more than one listed work item, and no separate work item is provided therefore. Include the cost of work not listed but necessary to complete the project designated in the contract documents in the various listed work items of the bid form.

The bids for the work are intended to establish a total cost for the work in its entirety. Should the Contractor feel that the cost for the work has not been established by specific items in the bid form, include the cost for that work in some related bid item so that the proposal for the project reflects the total cost for completing the work in its entirety.

The Contractor may experience difficulty in excavation due to rock or unsuitable backfill material throughout the project locations. It shall be the Contractor's responsibility to identify these areas and account for difficulty in excavation, the need to export rock or unsuitable backfill material and the need to import suitable backfill material. There will not be additional contract time or additional compensation for any project locations where any of these circumstances occur.

C. Bid Items

**1. Mobilization, Bid Item 1:**

Payment for Mobilization shall be made at the contract lump sum price and shall constitute full compensation for all labor, material, equipment, and incidentals required within Section 01721. The bid price shall include, but not limited to, preliminary construction schedule, bonds, insurance, installation and relocation of information signs, shop drawings, catalog submittals and shall constitute full compensation for all labor,

material, equipment and incidentals required. The bid price for mobilization shall not exceed 5 percent of the Bid Schedule Price.

**2. Erosion Control, Bid Item 2:**

Payment for Erosion Control Plan shall be made at the contract lump sum price and shall constitute full compensation for preparation, approval, NPDES Permit and shall include all labor and incidentals noted within Section 01571.

Payment for the Erosion Control Plan shall be made based on the percentage of project completion to ensure compliance with all requirements. The completeness shall be determined by the Engineer and updated on progress payments.

**3. Survey, Bid Item 3:**

Payment for Survey shall be made at the contract lump sum price and shall constitute full compensation for research, construction surveying, construction staking, preparation and submittal of surveying cut sheets, tying existing control monuments that may be damaged or disturbed prior to construction, verifications of horizontal and vertical position of existing control monuments, recovery and reestablishment of damaged or disturbed control monuments after construction, preparation and submittal of corner records to applicable government agencies, and shall include all labor and incidentals noted within Section 01722.

Payment for the Survey shall be made based on the percentage of project completion to ensure compliance with all requirements throughout the duration of the contract. The completeness shall be determined by the Engineer and updated on progress payments.

**4. Removal of all trash and debris, shrubs, bushes, tree stumps, existing pavement, concrete, v-gutter and pavement grindings from right of way, Bid Item 4:**

Item includes but is not limited to removal of all: trash, debris, shrubs, bushes, tree stumps, existing pavement (AC and/or PCC), concrete, v-gutter and pavement grindings from right of way. Dust control and export to allow for installation of proposed improvements per the plans. This item includes asphalt grindings spread throughout the alley surface and shall only be paid when removal of all items have occurred, and the site is ready for installation of proposed improvements.

Payment for this item shall be made at the contract lump sum and shall constitute full compensation for all labor, material, equipment and incidentals required. No partial payment for this item will be released. All must be complete and operable before any compensation will be released.

**5. Construct 2.5” AC over 4” Aggregate Base, Bid Item 5:**

Item includes but is not limited to 2.5” AC over 4” aggregate base as specified on the project plans and specifications; construction surveying, potholing existing utilities, construction staking, traffic control, dust control, grading, removal of all trash, organics and asphalt grindings to prepare the surface for proposed improvements, compaction and export. Item shall also include all clearing and grubbing per Section 300-1 of the General

Conditions. Grading and shaping shall conform to Section 300, 301 and 302 of the General Conditions. Integrate new asphalt concrete pavement with existing residential driveways to create seamless transitional driveways.

Payment for this item shall be made at the contract unit price and shall constitute full compensation for all labor, material, equipment and incidentals required. No partial payment for Construct 2.5" AC over 4" Aggregate Base will be released. All must be complete and operable before any compensation will be released.

**6. Construct 2' Wide V-Gutter, Bid Item 6:**

Item includes but is not limited to V-Gutter transition as specified on the project plans and specifications, construction surveying, construction staking, dust control, traffic control, grading, removal of all trash, organics and asphalt grindings to prepare the surface for proposed improvements, compaction and export. Item shall also include all clearing and grubbing per Section 300-1 of the General Conditions. Grinding and shaping shall conform to Section 300, 301, and 302 of the General Conditions.

Payment for this item shall be made at the contract unit price and shall constitute full compensation for all labor, material, equipment and incidents required. No partial payment for Construct 2' Wide V-Gutter will be released. All must be complete and operable before any compensation will be released.

**7. Construct V-Gutter Transition, Bid Item 7:**

Item includes but is not limited to V-gutter transition as specified on the project plans and specifications, construction surveying, construction staking, dust control, traffic control, grading, removal of all trash, organics and asphalt grindings to prepare the surface for proposed improvements, compaction and export. Item shall also include all clearing and grubbing per Section 300-1 of the General Conditions. Grading and shaping shall conform to Section 300, 301 and 302 of the General Conditions.

Payment for this item shall be made at the contract unit price and shall constitute full compensation for all labor, material, equipment and incidentals required. No partial payment for V-Gutter transition will be released. All must be complete and operable before any compensation will be released.

**8. Remove and Replace Driveway, 6" Thick PCC (560-C-3250), Compact top 6" to 95% compaction, Bid Item 8:**

Item includes but is not limited to the removal and replacement driveway 6" think PCC including adjacent curb and/or gutter as specified on the project plans and specifications; construction surveying, potholing existing utilities, construction staking, traffic control, dust control, grading, removal of all trash, organics and asphalt grindings to prepare the surface for proposed improvements, compaction and export. Item shall also include all clearing and grubbing per Section 300-1 of the General Conditions. Grading and shaping shall conform to Section 300, 301 and 302 of the General Conditions.

Payment for this item shall be made at the contract unit price and shall constitute full compensation for all labor, material, equipment and incidentals required. No partial

payment for this item will be released. All must be complete and operable before any compensation will be released.

**9. Remove and Replace 6” Thick PCC Sidewalk (560-C-3250), Compact Top 6” to 95% Compaction, Bid Item 9:**

Item includes but is not limited to the removal and replacement of 6” thick PCC (560-C-3250) sidewalk, compact top 6” to 95% compaction as specified on the project plans and specifications. Item includes but is not limited to erosion control, sawcutting, removal of varying thickness sidewalk, earthwork and compaction as required for the construction of new 6” thick concrete sidewalk. Sidewalk shall match the existing width and appearance of adjacent areas, as score lines and finish. Item also includes all necessary dust control, clearing, grubbing, grading, irrigation repair, information signs, survey monument preservation, and removals such as removal of vegetation, rubbish, and utilities as required for the construction of the proposed improvements under this bid item.

Payment for this item shall be made at the contract unit price and shall constitute full compensation for all labor, material, equipment and incidentals required, with no additional compensation or work allowed. No partial payment for sidewalk removal and replacement will be released.

**10. Washington Street – Sawcut 12" Wide AC at Property Line, Gravel Backfill, and Redwood Header Installation, Bid Item 10:**

Item includes but is not limited to all labor, materials, equipment, and incidentals necessary to perform a 12-inch wide sawcut of existing AC along the property line on Washington Street, as shown on the plans or directed by the Engineer. The contractor shall sawcut the AC cleanly and remove all debris and loose material from the area. Where AC exists beneath any fence line, it shall also be fully removed to provide an open trench down to native soil or base material. The backfill shall be placed in lifts and compacted to provide a stable and level surface. The height of the gravel backfill shall be field-verified and adjusted as necessary to match the existing pavement elevation.

Following removal of the AC, the trench shall be backfilled with clean, Class 2 aggregate base or Crushed Miscellaneous Base (CMB) gravel per City standards compacted to 95% relative compaction. Redwood headers shall be installed flush at the edge of the trench perimeter to define the boundary and contain the gravel. Headers shall be securely anchored to resist movement, all joints shall be tight and level, and corners mitered or butted as appropriate to maintain alignment and containment.

Work shall include clearing and disposal of all debris, proper site preparation, and restoration of adjacent surfaces as needed. All work shall conform to applicable city standards and be completed in a neat and workmanlike manner.

Payment for this item shall be made at the contract lump sum price and shall constitute full compensation for all labor, material, equipment and incidentals required.

**11. Demobilization, Bid Item 11:**

Payment for demobilization shall be made at the contract lump sum price and shall constitute full compensation for all labor, material, equipment and incidentals required.

**12. Unforeseen work <u>not</u> covered within all other bid items, Bid Item 12:**

Payment for the unforeseen work not covered within all other bid items shall be made at the contract price per lump sum (LS) and shall constitute full compensation for all labor, materials, equipment, and incidentals required. Unforeseen work must be approved by the City staff before doing any work and pay estimate shall be negotiated based on unit price already established with the bid proposal for this project. Any required work that is outside of the proposed bid unit cost, shall be performed based on the Time and Material (T&M) basis and T&M cost shall be negotiated and approved by the City staff prior to performing the work. Unforeseen work will be paid in each billing cycle with a percentage of the lump sum cost included in the bid. This item may not be spent entirely.

END OF SECTION

THIS PAGE INTENTIONALLY LEFT BLANK

# SECTION 01251 CHANGE ORDER REQUESTS

## 1.1 GENERAL

A. All quotations for preliminary change orders for extras, changes, additions, or deletions to the Work as described in EXTRA WORK of the GENERAL CONDITIONS shall be submitted to the ENGINEER, in writing, on the Change Order Request (COR) Cover Sheet and the Change Order Cost Summary Form, both attached, and in conformance with the requirements of Section 01254 CHANGE ORDERS. The quotation shall be firm for a period of not less than sixty (60) calendar days from the date of receipt of the quotation by the ENGINEER. The CONTRACTOR shall submit its written cost quotation and Time Impact Analysis not later than fifteen (15) days after being requested to provide such quotation, unless the ENGINEER allows more time. Delays in submitting quotations beyond the fifteen (15) days set forth herein, which cause a delay in the issuance of a Change Order or a delay to the completion date of the project, shall not be cause for a claim or a time extension under the Contract.

B. The ENGINEER'S request for quotation on a preliminary change shall not be considered authorization to proceed with the changed work prior to the issuance of a final Lump Sum or Time & Material Change Order, unless directed otherwise, in writing, by the ENGINEER, nor shall such request constitute justification for a delay to the existing Work or a time extension under the Contract.

END OF SECTION

# THE CITY OF REDLANDS
## MUNICIPAL UTILITIES AND ENGINEERING DEPARTMENT

## CHANGE ORDER REQUEST (COR)

| | | | |
|---|---|---|---|
| **Project Name:** | | **COR Number:** | |
| **Project Number:** | | **Date of Request:** | |
| **Requested By:** | | | |

| | |
|---|---|
| **Change Name:** | |

| **Description of Change (Required):** |
|---|
| |
| |
| |
| |
| |
| |

| **Reason for Change (Required):** |
|---|
| |
| |
| |
| |
| |

| **Location of Change (Required):** List all locations if various locations are included in this Request |
|---|
| |
| |
| |
| |

| **Additional Days Requested Due to Change (If Applicable):** |
|---|
| |

| | |
|---|---|
| **Total Net Change in Cost:**<br>**Note:** Attach all supporting documents for cost justification | $ 0.00 |

**Requestor:**

**Signature:** _____

**Title:** _____ **Date:** _____

# Change Order Cost Summary

Project Name :

Change Order Request No. :

Date :

| | | Direct Labor | Direct Materials | Direct Equipment | | Totals |
|---|---|---|---|---|---|---|
| (1): | Lump Sum Work by Prime Contractor | $0.00 | $0.00 | $0.00 | | |
| (2): | "T&M" Work by Prime Contractor | $0.00 | $0.00 | $0.00 | | |
| (3): | Subtotal - Direct Work (Prime Contractor) | $0.00 | $0.00 | $0.00 | | |
| | | | | | | |
| (4): | All Lump Sum Work by subcontractors (any tier) | $0.00 | $0.00 | $0.00 | | |
| (5): | All "T&M" Work by subcontractors (any tier) | $0.00 | $0.00 | $0.00 | | |
| (6): | Subtotal - Direct Work (all subcontractors) | $0.00 | $0.00 | $0.00 | | $0.00 |
| | | | | | **Add each of the three columns across and enter to the right.** | |
| (3)+(6)=(7): | Total - Direct Costs | $0.00 | $0.00 | $0.00 | | $0.00 |
| | | | | | | |
| (8): | Markup | (20% of direct labor) $0.00 | (15% of direct mat'l) $0.00 | (15% of direct equip) $0.00 | | $0.00 |
| | | | | | | |
| (9): | Prime Contractor Markup for subcontractors | | | | 10% of line (6) direct sub work up to $5,000 plus 5% of line (6) direct sub work over $5,000 | |
| | | | | | | |
| (10): | Bonds & Insurance | | | | 1% of line (7) all direct work | $0.00 |
| | | | | | | |
| (11): | Additional amount permitted by Contract | | | | | |
| | | | | | | |
| (12): | **GRAND TOTAL** | | | | Add sums of lines) (7), (8), (9), (10) and (11) | **$0.00** |

THIS PAGE INTENTIONALLY LEFT BLANK

# SECTION 01254 CHANGE ORDERS

## PART ONE -- GENERAL

### 1.1 REQUIREMENTS

Payment to the Contractor, or credit to the City, for any change, addition, deletion or extra to the Work, or settlement of any Claim, covered by any Change Order, shall be determined by the methods set forth herein. The Engineer may change the Plans and Specifications, character of the Work, or quantity of Work provided the total arithmetic dollar value of all such changes, both additive and deductive, does not exceed twenty-five percent (25%) of the Contract Price. Should it become necessary to exceed this limitation, the change shall be by written Supplemental Agreement between the Contractor and the City, which shall be executed by a Change Order.

Unless otherwise stipulated, "Unit Prices" include all costs necessary to furnish, install and complete the Work. The "Unit Prices" include all direct costs for labor, equipment and materials, all insurance and bond costs, all field and office supervisors and assistants, all onsite project administration, security costs, the cost of small tools and consumables, incidental job burdens, and all general home office expenses and no separate allowance will be made therefor. Assistants to field and office supervisors include all clerical, stenographic, and general office help. Incidental job burdens include, but is not limited to, office equipment and supplies, temporary toilets, telephone, utilities, safety equipment, warning devices, personal protective equipment, and conformance to OSHA requirements. Project administration includes, but is not limited to, review and coordination, estimating, engineering, scheduling, and expediting relative to Change Orders, and updating and furnishing Record Drawings to incorporate changes, schedule update, supervision not applied solely to the Work of the Change Order, home office salaries and expenses, and City of Redlands Business Tax.

A. Unit Prices

Unit prices stipulated in the Bid or itemized in the approved Schedule of Values shall be utilized, where they are applicable and determined reasonable by the Engineer. In the event that the Change Order results in a change in the original quantity of more than twenty-five percent (25%), either increase or decrease, then either the Engineer or the Contractor may request a review of the unit price to determine if a new unit price shall be mutually determined by negotiation. Any new unit price mutually determined under this Subsection shall only apply to the units in excess of one hundred twenty five percent (125%) of the original quantity for overruns. In case of underruns, the unit price stipulated in the Bid shall be applied to the first twenty-five percent (25%) of the actual quantity of work performed and the new mutually determined price shall be applied to the quantity between twenty-five percent (25%) and seventy-five percent (75%) of the original quantity.

Renegotiated unit prices or unit prices for new items added to the Contract by Change Order shall be determined in accordance with Subsections B through G. Whether stipulated in the Bid, itemized in the approved Schedule of Values or renegotiated, the unit prices used for payment constitute the total adjustment with no further costs owed for overhead, impact, profit, delay or impact to unchanged portions of the Contract, or any other reason. The unit price shall be full and final compensation as described in Subsection D.

The cost proposals for renegotiated unit prices shall be presented in accordance with the provisions of Subsections B through G. Should any Bid Item be deleted in its entirety, the amount bid for that bid item shall be subtracted from the total Contract amount. The Contractor shall be paid only for the actual cost incurred prior to the notification of such deletion for that Bid Item.

B. Lump Sum

The Engineer and the Contractor may mutually determine a total sum for the Extra Work. The Contractor shall summarize the total cost and furnish a breakdown of the proposed lump sum costs satisfactory to the Engineer in accordance with Subsections B through G. Such lump sum costs shall be full and final compensation as described in Subsection D. The Contractor's quotation shall conform to the requirements of Section 01251- Change Order Requests, and be submitted in the Change Order Cost Summary Form provided (see Attachment 01251-A1). The Change Order Cost Summary Form cannot be used to nullify or supercede any specification or contractual provision.

If the method or amount of payment cannot be agreed prior to performing the Extra Work, the Engineer may unilaterally issue a Change Order in the amount determined reasonable by the Engineer for the Extra Work and direct the Contractor to proceed immediately. The Engineer also has the option to issue a Change Order directing the Work be done on a Time and Materials basis with the Contractor providing all labor, equipment, and materials necessary to complete the Work in a satisfactory manner and within a reasonable period of time. Estimates for lump sum quotations and accounting for Time and Materials work shall be limited to direct expenditures necessitated specifically by the subject Extra Work, and shall be segregated as follows:

1. Labor, up to and including working general foremen, who are directly assigned to the Extra Work. Employees identified as superintendents or non-working general foremen shall not be charged as labor on Extra Work. The labor costs shall include actual documented payroll costs including wages, payroll taxes as established by law (i.e., FICA, Federal and State Unemployment Taxes), fringe benefits as established by negotiated labor agreements, and any insurance costs (such as Worker's Compensation and General Liability Insurance but shall not include Automobile Liability Insurance or any other insurance costs). A detailed

breakdown of those subcomponents of labor costs, by all crafts shall be submitted to the Engineer, by the Contractor and all Subcontractors, for approval, as part of the documentation of labor costs, within ten (10) working days after issuance of the Notice to Proceed. No other subcomponents of labor costs shall be considered, unless approved in writing by the Engineer.

The labor cost is not allowed to be increased by using labor classifications with paygrades higher than necessary to accomplish the Work.

2. Materials: The cost of materials used in performing the Extra Work will be the cost, including sales tax and freight, to the purchaser, whether Contractor, Subcontractor or other forces, from the supplier thereof, except as follows:

   a. Cash or trade discounts available to the purchaser shall be credited to the City notwithstanding the fact that such discounts may not have been taken by the Contractor.

   b. For materials secured by other than a direct purchase and direct billing to the purchaser, the cost shall be deemed to be the price paid to the actual supplier as determined by the Engineer. Supplier markup, except for actual costs incurred in the handling of such materials, will not be allowed.

   c. Payment for materials from sources owned wholly or in part by the purchaser shall not exceed the price paid by the purchaser for similar materials from said sources on contract items or the current wholesale price for such materials delivered to the Jobsite, whichever price is lower.

   d. If, in the opinion of the Engineer, the cost of materials is excessive, or the Contractor does not furnish satisfactory evidence of the cost of such materials, then the cost shall be deemed to be the lowest current wholesale price for the quantity concerned, delivered to the Jobsite less cash or trade discount. The City reserves the right to furnish materials for the Work and no claim shall be made by the Contractor for costs and profit on such materials.

   e. For the purposes of this Section, a "Supplier" is defined as any person or persons, firm or business, who supplies materials of construction and/or permanent equipment, but who does not perform any portion of the Work of the Contract on site, for the Contractor, except that labor or labor supervision which may be required by some manufacturers as part of their equipment installation for warranty or other purposes.

3. Equipment Costs, including ownership, lease or rental costs, as well as operating costs, for individual equipment units whose replacement value is in excess of $500. Transportation and set up costs shall be included, but only if the equipment is imported to the worksite solely to perform work on the Extra Work described in the Change Order and the Contractor can demonstrate that the changed work cannot or could not be performed economically with equipment already at the site. Equipment costs shall be determined in accordance with the requirements set forth in Subsection G.

4. Small tools, equipment, consumables and incidental costs: No separate payment will be made for the use of small tools or equipment with a replacement value of $500 or less. This applies to tools and equipment owned by the Contractor or its subcontractors of any tier. Also, no separate payment will be made for fuel, lubricants, tool or equipment repairs, tool or equipment maintenance, consumables, drinking water, sanitary facilities or other incidentals. These costs are already included as a part of Markup.

5. Subcontractor Costs, including their overhead and profit, provided that such costs are direct costs to the Contractor for performing the Extra Work as set forth in Subsections B through G.

C. Time and Materials Work

The costs of all Changed/Extra Work submitted under the Time and Materials (T&M) method shall be formulated in accordance with the provisions of Subsections B through I.

Unless otherwise stipulated on the Change Order, the "Not-to-Exceed" amount for all T&M Change Orders is $10000. The Contractor is responsible for tracking costs and for notifying the Engineer in writing when costs approach 50% and 75% of the "Not-to-Exceed" amount. In addition, if the Changed/Extra Work cannot be completed within the "Not-to-Exceed" limit, the Contractor shall notify the Engineer in writing, and in a timely manner, that the limit requires an increase. The City will only reimburse eligible costs up to the "Not-to-Exceed" amount.

The Contractor shall notify the Inspector at the beginning of each day when Changed/Extra Work is being performed. The Contractor shall notify the Inspector of the Changed/Extra Work being performed and describe the personnel involved, whether by Contractor forces or by its subcontractors at any tier. Failure to notify the Inspector prior to the start of Changed/Extra Work serves as the Contractor's waiver to claim for compensation on that day.

For each working day, the Contractor shall submit a "Daily Extra Work Report" (DEWR) to the Inspector. The "Daily Extra Work Report" shall summarize labor,

equipment and materials supplied. The Inspector will only consider Forms that are properly completed as described below.

1. Separate forms must be used for labor and for equipment/materials.

2. Labor, equipment, material or expenditures that are not included on The DEWR are ineligible for payment. There will be no exceptions to this requirement. It is the responsibility of the Contractor to include any and all items of labor, equipment, or material for which it requests compensation for each day's work completed.

3. Information required on the Labor form shall include name of personnel, personnel classification, and only the number of hours worked on Changed/Extra work for the day being reported. Since the overhead allowance already includes all necessary supervision, any hours for additional supervision or non-working foremen are ineligible for additional payment. The premium pay for a general foreman is eligible for payment only if the general foreman is a working foreman and a general foreman was required by a Union Labor Agreement or otherwise approved by the Inspector. The general foreman rate is eligible for payment only during the time that a general foreman was required for the Changed/Extra Work.

4. Information required on the Equipment/Material shall include Contractor-owned equipment and/or tools, and rented equipment or tools for which compensation is requested. Information shall include the type of equipment, size of equipment, equipment identification number, appurtenances, and only the number of hours worked on the Changed/Extra work.

5. The only allowable materials are materials delivered to the job site and/or incorporated only into the Changed/Extra work. The allowable materials shall be listed on the T&M sheet for the day that they are delivered to the job site and/or incorporated into the Changed/Extra work.

6. Delivery ticket(s) and/or bill(s) of lading for rental equipment and/or tools delivered to the site and/or material incorporated into the work for the day being reported must be attached with the T&M sheet for that day. No payment will be allowed for materials and/or rented equipment unless receipt(s) or bill(s) of lading is attached. If the request for payment is not substantiated by original vendor/supplier invoices, acceptable copies of original invoices, or other documentation acceptable to the Inspector, the City may establish the cost of the item(s) at the lowest possible wholesale price or rental rate applicable while the work was being performed.

7. Failure to submit the required "Daily Extra Work Report of Time and Material Work" by the close of the next working day shall waive all rights for that day unless otherwise approved by the Inspector. Work that cannot be substantiated by a "Daily Report", approved and signed by the Inspector, is ineligible for payment.

8. The Contractor is responsible for preparing the "Daily Extra Work Report" for work by its Subcontractors and submitting the Forms to the Inspector on time.

9. The Contractor must have each "Daily Extra Work Report" verified by the Inspector. After the "Daily Extra Work Report" is approved by the Inspector, both the Contractor and Inspector sign the report. The original "Daily Extra Work Report" is retained by the Inspector with a copy provided to the Contractor.

10. When the "Daily Extra Work Report" is signed by the Inspector and the Contractor, it is binding on the Contractor and its Subcontractors.

11. When agreed to by the Inspector, the Contractor may submit a supplemental "Daily Extra Work Report" for labor, materials, or equipment for which the Contractor requests compensation but failed to list on the original daily report.

    a. These supplemental forms shall be marked "SUPPLEMENTAL".

    b. Unless otherwise approved by the Inspector, the supplemental forms may only be submitted for approval up to two (2) working days following the date when the work was performed.

No payment will be allowed for labor, materials, or equipment included on T&M sheets not signed by the Contractor and the Inspector. Payment will not be allowed for labor, materials, or equipment included on T&M sheets signed by anyone other than the Inspector or the Inspector's immediate supervisor.

D. General

It is the intent of the City to settle all Change Orders full and final at the time the Change Order is issued. Therefore, the following paragraph shall be made a part of all Change Orders, whether included or not on the actual change order:

> "The compensation (time and cost) set forth in a Change Order comprises the total compensation due the Contractor, all Subcontractors, and all Suppliers, for the Work or change defined in the Change Order, including impact on unchanged work. By signing the Change Order, the Contractor acknowledges and agrees on behalf of himself, all Subcontractors, and all

Suppliers, that the stipulated compensation includes payment for all work contained in the Change Order, plus all payment for the interruption of schedules, extended field overhead costs, delay, and all impact, ripple effect or cumulative impact on all other work under this Contract. The signing of the Change Order indicates that the Change Order constitutes full mutual accord and satisfaction for the change, and that the time and/or cost under the Change Order constitutes the total equitable adjustment owed the Contractor, all Subcontractors, and all Suppliers as a result of the change. The Contractor, on behalf of himself, all subcontractors, and all Suppliers, agrees to waive all rights, without exception or reservation of any kind whatsoever, to file any further claim related to this Change Order. No further claim or request for equitable adjustment of any type for any reasonably foreseeable cause shall arise out of or as a result of this Change Order or the impact of this Change Order on the remainder of the Work under this Contract."

Costs which shall not be paid in Change Orders under this Contract include, but are not limited to, interest costs of any type; claim preparation or filing costs; legal expenses; the costs of preparing or reviewing proposed Change Orders or Change Order proposals; lost revenue; lost profits; lost income or earnings; rescheduling costs; costs of idled equipment when such equipment is not at the site or has not yet been employed on the Work; lost earnings or interest on unpaid retainage; claims consulting costs; and the costs of corporate officer or staff visiting the site; any compensation due to the fluctuation of foreign currency conversion or exchange rates; loss of other business; changes in taxes or increased tax rates of any kind or any costs identified as unallowable under the provisions of the Federal Acquisition Regulations.

Extensions of time shall be based solely upon the effect of delays to the Work as a whole. Extensions of time shall not be granted for delays to the Work, unless the Contractor can clearly demonstrate, through analysis of the current updated schedule, that the delay to the Work as a whole arose or will arise from causes other than normal weather, beyond the control and without fault or negligence of the Contractor, or any Subcontractor, at any tier, and that such delays did or will, in fact, delay the progress of the Work as a whole. The Contractor shall not be entitled to a time extension unless it submits a Time Impact Analysis which is a calculation of the extent of the delay to the end date of the Work and which shows that the Work has been or will be extended beyond the current Contract completion date. A Time Impact Analysis is a scheduling procedure which utilizes the networking techniques (fragnets) and a written analysis of the facts associated with the alleged delay to demonstrate the effect of the alleged delay on the critical path of the schedule. A "fragnet" is defined as a sequence of new activities and/or activity revisions that are proposed to be added to the existing current updated schedule to demonstrate (mathematically and graphically) the influence of the alleged delay on the end date of the Work and shall be the sole method for incorporating delays and impacts into the schedule. The objective of a

Time Impact Analysis is to pinpoint, isolate, and quantify all time impact associated with a specific issue and determine its time relationship to past or current delays. Time extensions shall not be allowed for delays to parts of the Work that are not on the critical path of the currently approved monthly updated project schedule. Time extensions shall not be granted, nor delay damages of any kind whatsoever paid to the Contractor, until all available float, slack, or contingency time on the project is used and the end date of the Work is moved beyond the current, adjusted Contract completion date.

The cost summary, cost breakdowns and requests for cost reimbursement submitted by the Contractor (for delay, disruption, hindrance and interference associated with the changes, additions, deletions or extras) shall be itemized in a manner that, with mathematical certainty and without reliance upon probabilities or inferences, segregates the direct, actual reimbursable costs associated with each individual, change, addition, deletion, extra and (on an event-by-event basis) each individual delay or disruption event. Such cost summaries, breakdowns or requests shall not be based, in whole or in part, upon any methodology (such as "total cost" or "modified total cost" methodologies) that purports to calculate the Contractor's additional costs of performance of the extra, change, addition or deletion (including without limitation the additional costs of delay, disruption or other impact) based on the difference between Contractor's total actual Project or line item costs (with or without fee) and its original bid estimate for the Project or any original bid estimate line item. In connection with the foregoing, Contractor represents and warrants that it has the ability to generate and maintain complete and accurate cost accounting records that will reflect (i) the actual costs incurred or saved for each individual item of Extra Work, change, addition, deletion (including without limitation any costs of associated delay, disruption, interference, hindrance and the cumulative impact of each extra, change, addition, deletion on other parts of the Work); and, (ii) on an event-by-event basis, the effect of each delay or disruption that forms the basis of each request for extension of time, regardless of their scope, number, complexity, cumulative effect, or time of issuance or occurrence.

Except as provided in Section 6-6 of the General Conditions, Contractor shall have no right to recovery of any compensation, costs, expenses or damages resulting from delay, disruption, interference, or hindrance in the performance of the Work (including without limitation interruption of schedules, excess or extraordinary extended field and indirect overhead costs, loss of productivity and the impact, ripple or cumulative effect on other Work).

Contractor waives any claim or rights and remedies based on abandonment, quantum merit, rescission or other similar legal theory by reason of any of the following circumstances, which the Contractor acknowledges and agrees are within the reasonable contemplation of the parties: (i) changes, additions, deletions and extras to the Work after execution of the Contract and issued from time to time throughout the period of construction, regardless of their scope,

number, cumulative value, or complexity, to correct errors, omissions, conflicts, and ambiguities in the Contract Documents, or to implement discretionary changes to the scope of Work requested by the City; (ii) the issuance and performance of changes, additions, deletions and extras in a manner that is not in sequence with the as-built or as-planned progress of the Work; (iii) changes due to Differing Site Conditions; (iv) suspensions of the Work or parts thereof, or limitations on access to portions or all of the Work, for the convenience of City or in the interests of the Project; (v) delay or disruption to the Work due to failure of the City, Engineer or Inspector to timely perform any contractual obligation.

E. Markups – Overhead and Profit

1. In addition to the direct expenditures specified for labor, materials and equipment in Subsection B, a lump sum will be paid for all overhead and profit, including: All insurance costs other than specifically mentioned in this Section, all field and office supervisors and assistants, all onsite project administration, security costs, the cost of small tools and consumables, incidental job burdens, and all general home office expenses and no separate allowance will be made therefor. Assistants to field and office supervisors include all clerical, stenographic, and general office help. Incidental job burdens include, but is not limited to, office equipment and supplies, temporary toilets, telephone, utilities, safety equipment, warning devices, personal protective equipment, and conformance to OSHA requirements. Project administration includes, but are not limited to, review and coordination, estimating, engineering, scheduling, and expediting relative to Change Orders, and updating and furnishing Record Drawings to incorporate changes, schedule update, supervision not applied solely to the Work of the Change Order, home office salaries and expenses, and City of Redlands Business Tax. Such lump sum shall conform to the following schedule of percentages of the total amount of direct expenditures of the Contractor and subcontractors.

(a) Work by Contractor. The following percentages shall be added to the Contractor's costs and shall constitute the markup for all overhead and profits:

| | |
|---|---|
| 1) Direct Labor | 20% |
| 2) Direct Materials | 15% |
| 3) Direct Equipment | 15% |

(b) Work by Subcontractor. When all or any part of the extra work is performed by a Subcontractor, the markup established in (a) shall be applied to the Subcontractor's actual cost of such work. A markup of 10 percent on the first $5,000 of the subcontracted portion of the extra work and a markup of 5 percent on work added in excess of $5,000 of the subcontracted portion of the extra work may be added by the Contractor.

2. Bonds and Insurance

An additional allowance of one percent (1%) of all direct costs (less markup) is allowed.

3. Add/ Deduct Changes

The overhead rates determined above shall be applied to all additive Change Orders, except those utilizing as-bid Unit Prices listed in the Bid Proposal.

Any change in the Work involving both extras and credits shall show a net total cost, including subcontracts. Allowances for overhead and profit to the net total cost, as specified herein above, shall be applied if the net total cost is an extra; overhead and profit allowances shall not be applied if the net total cost is a credit. The estimated cost of deductions shall be based on labor and material prices on the date the Contract was signed.

4. When all or any part of the extra work is performed by a Subcontractor, the markup established in subsection 1.1.E.1 shall be applied to the Subcontractor's actual cost of such work. A markup of 10 percent on the first $5,000 of the subcontracted portion of the extra work and a markup of 5 percent on work added in excess of $5,000 of the subcontracted portion of the extra work may be added by the Contractor.

F. City Furnished Materials, Equipment and Services

The Engineer reserves the right to furnish materials, equipment and services deemed expedient for use on the Changed/Extra Work. The Contractor shall have no claim for profit or overhead on the cost of such materials, equipment and services.

G. Equipment Costs

The rates for rental or leased equipment shall not exceed the rates listed in the Caltrans Labor Surcharge and Equipment Rental Rates (Caltrans LS&ERR). For T&M Change Orders, the rates are established by the actual paid invoice(s) that comply with the requirements of Subsections G.1 and G.3. Owned equipment costs shall not exceed the rates established by Subsection G.2. The most recent published edition in effect at the commencement of actual equipment use shall be used.

The rates paid for any rented or leased equipment or tools shall include the cost of fuel, oil, lubrication, supplies, small tools, necessary attachments, repairs and maintenance of any kind, depreciation, storage, insurance and all incidental costs associated with the operation of the equipment or tools.

It is the responsibility of the Contractor to include any appurtenances added to equipment which would increase the basic rate for said equipment (i.e., hoe-ram, oversize bucket, and etcetera) as established in the acceptable rental rate guide. All equipment and/ or tools shall be acceptable to the Inspector, in good working condition, suitable for the purpose for which it is to be used, and necessary to complete the Changed/Extra Work. Payment will be based on the manner in which the equipment was actually powered, operated and modified per the equipment manufacturer's recommendations.

1. Rented or Leased Equipment

For equipment rented or leased (including lease with purchase option) in arm's length transactions from outside vendors, the Contractor shall be paid the actual invoiced, rented or leased rates provided that the invoiced lease or rental rates do not exceed the rates set forth in the Caltrans LS&ERR. Arm's length rental or lease transactions are those in which the firm involved in rental or lease of such equipment is not associated with, owned by, have common management, directorship, facilities, or stockholders with the firm renting the equipment. Submittal by a Contractor of a rental or leased invoice from the lessor will be prima facie proof of compliance with the above. However, such invoices are not conclusive proof; if questioned, the burden of proof remains with the Contractor. In no event shall the leased equipment rate billed to the City be at rates exceeding those prescribed in the following table:

| Actual Usage (Change Order & Contract Work Combined) | Payment Category |
|---|---|
| Less than 8 hours | Hourly Rate |
| 8 or more hours but less than 7 days | Daily Rate |
| 7 or more days but less than 30 days | Weekly Rate |
| 30 calendar days or more | Monthly Rate |

a. When in Use:

Actual equipment use time documented by the Inspector shall be the basis that the equipment was utilized on the changed work and paid for under the Change Order. In addition to the lease or rental rate, equipment-operating costs shall not exceed the estimated hourly operating rate as set forth in the Caltrans LS&ERR. The hours of operation shall be based upon actual equipment usage on the changed work as recorded by the Inspector. For multiple shift work sequences, the allowable equipment rate shall not exceed fifty percent (50%) of the base rate, for second or third shifts.

b. When Idle:

Idle equipment is equipment on site and necessary to perform the Work under the change but not in actual use due solely to the impact of the changed work. Equipment operating costs due to idle time, documented by the Inspector, shall be paid at the rate determined in "G" (1) above. Idle time shall include a reasonable time allowance to and from the project site.

Payment for equipment or tools shall be limited to hours actually worked on the Changed/Extra Work if the equipment or tool is already on site for Work under the original Contract. No "standby" time will be paid for equipment already on site for Work under the original Contract.

If equipment or tools are used intermittently and, when not in use, could be returned to the rental source at less expense than holding it at the work site, it shall be returned, unless the Contractor elects to keep it at the work site at no expense to the City.

2. Owned and Other Equipment

Equipment rates for owned equipment or equipment provided in other than arm's length transactions shall not exceed the total hourly costs as set forth in the Caltrans "Labor Surcharge and Equipment Rental Rates" effective at the time the work is performed. (The Caltrans equipment rental rates are available on the internet at http://www.dot.ca.gov/hq/construc/equipmnt.html.) If the equipment is not listed in Caltrans LS&ERR, then the Rental Rate Blue Book shall be used. When using the Blue Book, the hourly rate for any period less than 7 days shall be the weekly rate divided by 40, plus the Operating Cost. Except as noted herein below, this equipment hourly rate plus the estimated operating cost per hour from the Blue Book will be paid for each hour the equipment actually performs the Extra Work. Daily records listing the equipment units and their respective operators, identification code, and actual usage on the Work under the Change Order, as certified at the end of each work day (or work shift if the Work is being performed in multiple work shift sequence) by the Inspector shall be the record upon which actual equipment use shall be based. For multiple shift work sequences, the Caltrans overtime factor shall be applied (When using the Blue Book one-half the Non-Operating Cost will be deducted for second and third shifts. The Non-Operating Costs are the Blue Book monthly or weekly/40 rates, as applicable.). It is agreed that this rate shall represent payment in full for all the Contractor's direct costs.

a. When Idle:

Payment for equipment necessary to be on the site to complete the Work, but not in actual use due solely to the impact of the changed work, shall be paid per the table in Caltrans Standard Specifications Section 9-1.03A(3b), provided that its presence and necessity on the site has been documented by the Inspector, and further provided that the equipment was idled solely by actions of the City. Idle equipment time will only be paid as a function of delays specifically directed or caused by the City's actions. In no event shall the idle time claimed in a day for a particular piece of equipment exceed the normal work schedule established for the project - usually eight (8) hours per day or forty (40) hours per week, and excluding Saturdays, Sundays, and holidays. For multiple shift work sequence, the allowable idle equipment rate shall not be allowed, for second or third shifts. It is agreed that this rate shall represent payment in full for all the Contractor's direct costs.

3. Equipment Haulage and Set Up Costs

Documented and actual equipment haulage and set up costs shall be paid for, if applicable as set forth in Subsection B.3.

4. Other Equipment Cost Guides

In the event that a piece of equipment used on a Change Order is not listed in Caltrans or the Blue Book, costs may be derived from the Associated General Contractor's of America Equipment Ownership Guide, the Associated Equipment Dealers Guide, or the Equipment Rate Guide published by the U.S. Army Corps of Engineers as adjusted appropriately for the type of work and use and the regional area of the Work under this Contract.

H. Records

At any time should the Contractor deviate substantially from the schedule, method and sequence of operation, equipment, cost or pricing data furnished by the Contractor and agreed to by the City in connection with the Change Order or should the City determine that any price negotiated in connection with the Change Order is defective due to such deviation or the fault of the Contractor, the City reserves the right to reduce the Change Order cost and reissue the Change Order at the amount in which the City determines to be the actual costs to complete the change.

Whenever any material or process is indicated or specified by patent or a proprietary name, or by name of a manufacturer in the Change Order, such direction shall not relieve the Contractor's responsibility or obligation to perform

work in accordance with the contract requirements. The Contractor shall be solely responsible for, and have control over construction means, methods, techniques, sequences and procedures, coordination of all portions of the contract and Change Order work.

The Contractor shall on a weekly basis submit an approximate accounting of the amount expended on the Time and Materials work to date and an estimate of the Impact to the time of performance of work.

I. Partial Payments for Time and Materials Work.

Progress payments for Time and Materials work shall only be made if the anticipated cost of the changed work is in excess of $50,000 and/or the time to perform the changed work will exceed two (2) months duration. To receive payments for Time and Materials work, the Contractor shall submit to the Engineer an invoice of the daily reports which were verified by the Inspector, with details and documents, verifying the Contractor's and Subcontractor's actual costs incurred for the Time and Materials work as set forth in Subsections B through H. Costs shall be submitted within thirty (30) calendar days after the T&M work has been satisfactorily completed unless an extension of time for submittal is authorized in writing by the Inspector.

END OF SECTION

# SECTION 01298 SCHEDULE OF VALUES

## 1.1 GENERAL

A. The Schedule of Values shall be used as a basis for determining progress payments on a lump sum contract or any designated lump sum bid item. The Schedule of Values shall be a schedule of cost loaded construction activities equal, in total, to the lump sum bid and shall be in such form and sufficient detail to correctly represent a reasonable apportionment of the lump sum. Prior to submitting an invoice for payment, the CONTRACTOR shall have submitted a detailed Schedule of Values and obtained approval from the ENGINEER.

B. Each lump sum bid item on the Schedule of Work and Prices, as set forth in the Bid must be broken down separately. The breakdown of each lump sum bid item must cover the cost of construction required by the contract documents for that item. The sum of the values for the construction activities, within a bid item, must equal the total bid amount for that item. The breakdown shall include subcontract amounts which shall not deviate from the amounts submitted in the Bid Proposal. The CONTRACTOR shall provide certification from the Subcontractors certifying the subcontract amounts.

C. Each activity in the Schedule of Values shall delineate one construction activity. For example, the placement of concrete between construction joints, the construction of an electrical duct bank or pipeline between points A & B. The costing for each activity should include all costs for the labor and materials or equipment required to complete the activity. For example, concrete construction activities should include all costs for the forming, placing of reinforcement, placing concrete and curing. The cost for pipeline construction activities should include materials, equipment and installation including pipeline supports or thrust blocks. The excavation and backfill for a pipeline or structure may be separate activities. The Contract Price breakdown shall include the itemized costs for the plant establishment and any maintenance services to be performed before the final project acceptance is made. No non-construction activity shall be cost loaded.

D. The CONTRACTOR shall use cost loaded construction activities from the Construction Schedule as a Schedule of Values. Each construction activity shall be encoded to its bid item and a sort provided for each bid item totaling the cost loaded amount. The total of the Cost Loaded amounts for each bid item shall equal the amount bid for that item. The total of the Schedule of Values shall equal the current Contract value at all times. At any time during the progress of the Work of the Contract the INSPECTOR reserves the right to review the cost loading of the Schedules of Values and direct necessary revisions. When requested by the INSPECTOR, the CONTRACTOR shall provide all information necessary to substantiate the cost loading.

E. Attached are samples of the Schedule of Values. The City will provide project specific Schedule of Values for the CONTRACTOR to use throughout the project at the Preconstruction Meeting. The Schedule of Values must be used by the CONTRATRACTOR at the time of each progress payment.

END OF SECTION

**Project Name**

**Contractor Name**
**Address**
**Address**
**Phone:**

**PROJECT NUMBER:**

**FOR BILLING PERIOD ENDING:**
**INVOICE DATE:**
**INVOICE NO.**

| | BID ITEM/DESCRIPTION OF WORK FOR BID ITEM | QUANT. | UNIT | UNIT BID PRICE | ITEM BID PRICE | WORK PREVIOUSLY COMPLETED | | WORK COMPLETED THIS MONTH | | TOTAL QTY TO DATE | VALUE OF WORK COMPL TO DATE |
|---|---|---|---|---|---|---|---|---|---|---|---|
| | | | | | | QTY | $ VALUE | QTY | $VALUE | | |
| | | | | | $0.00 | | $0.00 | | | 0.0 | $0.00 |
| | | | | | $0.00 | | $0.00 | | | 0.0 | $0.00 |
| | | | | | $0.00 | | $0.00 | | | 0.0 | $0.00 |
| | | | | | $0.00 | | $0.00 | | | 0.0 | $0.00 |
| | | | | | $0.00 | | $0.00 | | | 0.0 | $0.00 |
| | | | | | $0.00 | | $0.00 | | | 0.0 | $0.00 |
| | | | | | $0.00 | | $0.00 | | $0.00 | 0.0 | $0.00 |
| | | | | | $0.00 | | $0.00 | | $0.00 | 0.0 | $0.00 |
| | | | | | $0.00 | | $0.00 | | | 0.0 | $0.00 |
| | | | | | $0.00 | | $0.00 | | $0.00 | 0.0 | $0.00 |
| | | | | | $0.00 | | $0.00 | | $0.00 | 0.0 | $0.00 |
| | | | | | $0.00 | | $0.00 | | | 0.0 | $0.00 |
| | | | | | $0.00 | | $0.00 | | $0.00 | 0.0 | $0.00 |
| | | | | | $0.00 | | $0.00 | | $0.00 | 0.0 | $0.00 |
| | | | | | $0.00 | | $0.00 | | $0.00 | 0.0 | $0.00 |
| | | | | | $0.00 | | $0.00 | | $0.00 | 0.0 | $0.00 |
| | | | | | $0.00 | | $0.00 | | | 0.0 | $0.00 |
| | | | | | $0.00 | | $0.00 | | $0.00 | 0.0 | $0.00 |

**Project Name**

**Contractor Name**
**Address**
**Address**
**Phone:**

**PROJECT NUMBER:**

**FOR BILLING PERIOD ENDING:**
**INVOICE DATE:**
**INVOICE NO.**

| BID ITEM/DESCRIPTION OF WORK FOR BID ITEM | QUANT. | UNIT | UNIT BID PRICE | ITEM BID PRICE | WORK PREVIOUSLY COMPLETED | | WORK COMPLETED THIS MONTH | | TOTAL QTY TO DATE | VALUE OF WORK COMPL TO DATE |
|---|---|---|---|---|---|---|---|---|---|---|
| | | | | | QTY | $ VALUE | QTY | $VALUE | | |
| | | | | $0.00 | | $0.00 | | | 0.0 | $0.00 |
| | | | | $0.00 | | $0.00 | | $0.00 | 0.0 | $0.00 |
| | | | | $0.00 | | $0.00 | | | 0.0 | $0.00 |
| | | | | $0.00 | | $0.00 | | $0.00 | 0.0 | $0.00 |
| | | | | $0.00 | | $0.00 | | $0.00 | 0.0 | $0.00 |
| | | | | $0.00 | | $0.00 | | $0.00 | 0.0 | $0.00 |
| | | | | $0.00 | | $0.00 | | $0.00 | 0.0 | $0.00 |
| | | | | $0.00 | | $0.00 | | $0.00 | 0.0 | $0.00 |
| | | | | $0.00 | | $0.00 | | $0.00 | 0.0 | $0.00 |
| | | | | $0.00 | | $0.00 | | | 0.0 | $0.00 |
| **TOTALS** | | | | $0.00 | | $0.00 | | $0.00 | | $0.00 |

| SUMMARY OF CHANGE ORDERS | QTY | UNIT | UNIT BID PRICE | QTY | $ VALUE | QTY | $ VALUE | TOTAL QTY TO DATE | VALUE OF WORK COMPL TO DATE |
|---|---|---|---|---|---|---|---|---|---|
| CHANGE ORDER NO. 1 | 1 | LS | | | | | | 0.0 | $0.00 |
| CHANGE ORDER NO. 2 | 1 | LS | | | | | | 0.0 | $0.00 |
| CHANGE ORDER NO. 3 | 1 | LS | | | | | | 0.0 | $0.00 |
| CHANGE ORDER NO. 4 | 1 | LS | | | | | | 0.0 | $0.00 |
| CHANGE ORDER NO. 5 | 1 | LS | | | | | | 0.0 | $0.00 |
| CHANGE ORDER NO. 6 | 1 | LS | | | | | | 0.0 | $0.00 |
| CHANGE ORDER NO. 7 | 1 | LS | | | | | | 0.0 | $0.00 |
| CHANGE ORDER NO. 8 | 1 | LS | | | | | | 0.0 | $0.00 |
| CHANGE ORDER NO. 9 | 1 | LS | | | | | | 0.0 | $0.00 |
| CHANGE ORDER NO. 10 | 1 | LS | | | | | | 0.0 | $0.00 |
| | | | | | | | | 0.0 | $0.00 |
| | | | | | | | | 0.0 | $0.00 |
| | | | | | | | | 0.0 | $0.00 |
| | | | | | | | | 0.0 | $0.00 |
| | | | | | | | | 0.0 | $0.00 |
| **CHANGE ORDERS TOTAL** | | | $0.00 | | | | $0.00 | | $0.00 |

| | | | | |
|---|---|---|---|---|
| | | | VALUE OF WORK COMPLETED TO DATE | $0.00 |
| | | | | |
| ORIGINAL CONTRACT PRICE | $0.00 | | AMOUNT DUE THIS PERIOD INCL RETENTION | $0.00 |
| TOTAL AMOUNT OF CHANGE ORDERS | $0.00 | | LESS 5% RETENTION | $0.00 |
| **ESTIMATED TOTAL CONTRACT PRICE TO DATE** | $0.00 | | **AMOUNT DUE THIS PERIOD** | **$0.00** |

THIS PAGE INTENTIONALLY LEFT BLANK

# SECTION 01321 CONSTRUCTION SCHEDULE

1. THE REQUIREMENT

A. It is expressly understood and agreed that the time of beginning, the rate of progress, and the time of completion of the Work are of the essence of this Contract.

B. The CONTRACTOR'S representative in charge of scheduling is required to attend all meetings pertaining to scheduling and progress of the Work.

C. The CONTRACTOR shall submit to the ENGINEER 3 hard copies and the electronic file of the CONTRACTOR'S Construction Schedule (the schedule) at the time of the preconstruction meeting. The schedule shall be either a Critical Path Method (CPM) Network or a detailed Bar Chart with the critical path clearly shown. If the CPM network option is used, then Primavera Project Management or Microsoft Project shall be the scheduling software. If a detail Bar Chart is used, Microsoft Excel shall be the software utilized. The schedule shall include the following:

1. Activity ID,
2. Activity Description,
3. Start date for each activity,
4. Finish date for each activity,
5. Original duration,
6. Predecessor,
7. Successor,
8. Percent Complete,
9. Remaining Days.

A minimum of seven (7) calendar days for review of each schedule. Schedule activities shall be of sufficient detail to assure adequate planning has been done for proper execution of the Work and such that, in the sole judgement of the ENGINEER, it provides an appropriate basis for monitoring progress. The schedule shall begin with the date of issuance of the Notice to Proceed and conclude with the date of Final Completion shown in the Contract. Submittal and approval of the schedule in accordance with the requirements of this Section is a condition precedent to the issuance of any payments under this Contract. Once the schedule is approved it will become the baseline schedule and must be shown and compared on all subsequent schedule submittals.

D. Float, slack time, or contingency within the schedule (i.e., the difference in time between the project's early completion date and the required Contract Completion date), and total float within the schedule, is not for the exclusive use of either the CITY or the CONTRACTOR, but is a jointly owned expiring resource available to and shared by both parties. Pursuant to this float sharing requirement, use of

float suppression techniques shall be cause for rejection of the schedule and any revisions or updates.

E. Time extensions shall not be granted nor delay damages paid until a delay occurs which is beyond the control and without the fault or negligence of the CONTRACTOR and its Subcontractors or Suppliers, at any tier, and which extends actual performance of the Work beyond the current Contract completion date and the completion date projected by the current, approved, updated schedule. If the delay occurs along a path, which the current approved Construction Schedule update projects late completion prior to addition of any CITY caused delay, then the time extension allowed will be only for the additional delay demonstrated by the approved Time Impact Analysis. Time extensions shall be granted only if they are clearly demonstrated by the CONTRACTOR through the submittal, within seven (7) calendar days after the delay occurs, of a Time Impact Analysis which demonstrates the estimated impact on the end date of the Work; is based upon the updated Construction Schedule current as of the month the delay occurred; and demonstrates that the delay cannot be mitigated, offset, or eliminated through such actions as revising the intended sequence of Work or other means.

If a time extension if granted by the CITY, the updated schedule reflecting the change shall become the baseline and be reflected schedule and must be shown and compared on all subsequent schedule submittals.

Since float time within the Construction Schedule is jointly owned, it is acknowledged that CITY caused delays on the project may be offset by CITY caused time savings (e.g. critical path submittals returned in less time than allowed by the Contract or approval of substitution requests which result in a savings of time to the CONTRACTOR). In such an event, the CONTRACTOR shall not be entitled to receive a time extension or delay damages until all CITY caused time savings are exceeded and the Contract completion date is also exceeded.

F. If the initial schedule submitted shows completion of Work more than thirty (30) calendar days in advance of the Contract completion date, the ENGINEER may, at no cost to the CITY, decrease the Contract duration by issuance of a Change Order which changes appropriate Milestone Date(s) and the Contract completion date to the completion date reflected on the schedule. Any approved schedule, revision, or update having an early completion date shall show the time between the early completion date and the Contract completion date as "project float".

G. Comments made by the ENGINEER on the schedule during review will not relieve the CONTRACTOR from compliance with all requirements of the Contract. The ENGINEER may request that the CONTRACTOR and all major Subcontractors (defined herein as being any Subcontractor, Sub-Subcontractor, or Supplier with five (5) percent or more of the value of the Contract) participate in

review of any schedule submission. All revisions shall be submitted within seven (7) calendar days after the ENGINEER'S review.

H. Two copies of an updated schedule shall be submitted to the ENGINEER for approval with the submittal of each CONTRACTOR'S monthly payment request or the monthly payment request will be withheld. For those activities started but not yet completed at the time of submittal, the updated schedule shall reflect the percentage complete, as agreed between the CONTRACTOR and the INSPECTOR, and an estimate of the remaining duration. The monthly update of the schedule shall include an updated bar chart with logic arrows or network diagram and include the same additional data as required by Section 1.C. If the CPM network option is used, the schedule shall be calculated using remaining durations and the progress override option. The monthly update shall also include a complete, hard copy list of all the changes made from the previously approved submittal. If the schedule is done using Primavera, use a Claim Digger report for the list of changes.

I. The submittal of an updated schedule which meets the requirements of this Section, accurately reflects the status of the Work (for all previously accepted activities), and incorporates all approved changes into the schedule, shall be a condition precedent to the processing of the monthly payment application. (Actual and/or forecast dates for status of additional submittal cycles shall be added without the prior approval of the Engineer.) Updated schedules shall also be submitted at such other times as the ENGINEER may direct. Upon approval of a Change Order or issuance of a notice to proceed with a change, the approved change shall be reflected in the next schedule update.

J. If completion of any part of the Work, delivery of equipment or materials, or submittal of CONTRACTOR submittals is behind schedule and will impact the end date of the Work, the CONTRACTOR shall submit a written recovery plan acceptable to the ENGINEER for completing the Work by the current Contract completion date, if requested by the ENGINEER.

K. As a condition precedent to the release of any retained funds, the CONTRACTOR shall, after substantial completion of the Work has been achieved, submit a certified, final schedule which accurately reflects the manner in which the project was constructed and includes actual start and completion dates for all activities on the schedule.

END OF SECTION

THIS PAGE INTENTIONALLY LEFT BLANK

# SECTION 01322 CONSTRUCTION PROGRESS PHOTOGRAPHY

## 1.1 GENERAL

A. Required**:** Provide photographs taken at the Jobsite at the specified stages of Contracted Work in accordance with provisions of this Section.

1. The Contractor shall provide the City with photos with addresses identifying each property location, the direction the photograph was taken (facing North, South etc).

2. Take first photographs just before CONTRACTOR starts any work operations at the Jobsite.

3. Take final photographs when all Contracted Work has been completed, regardless of time interval since previous photographs were taken.

## 1.2 SUBMITTALS

Except as otherwise directed by the ENGINEER, submit all photographs electronically on a CD/DVD organized by phase of construction and location.

## 1.3 QUALITY ASSURANCE

Photographs and prints to be of professional quality; clear, in focus, with high resolution and sharpness, and with minimum distortion.

END OF SECTION

THIS PAGE INTENTIONALLY LEFT BLANK

# SECTION 01323 CONSTRUCTION STATUS REPORTS

## 1.1 REQUIREMENTS

### A. Daily Status Report

The Contractor shall complete a daily report indicating manpower, major equipment, subcontractors, unusual occurrences and etc., involved in the performance of the work. The daily report shall be completed on forms prepared by the Contractor and approved by the City and shall be submitted to the Project Manager at the conclusion of each work week.

The Contractor shall also have workers on the project sign in and out each day on the City of Redlands Daily Sign In Sheet which shall state the name, times in and out and the work performed by each worker on the project each day. The completed Daily Sign In Sheets shall be submitted to the City of Redlands Project Manager at the end of each work week. Failure to submit daily reports and daily sign in sheets to the Project Manager on a weekly basis will result in a possible and temporary suspension of work until reports are submitted.

### B. Weekly Status Report

During the construction phase of the Work, the CONTRACTOR shall submit weekly written status reports to the ENGINEER and the INSPECTOR. The report shall contain a record of inspections and tests, not performed by CITY forces, for all Work accomplished subsequent to the previous report and shall include the following information:

1. Type of work under way during the time frame of the report (e.g., earthwork, concrete work, structural steel erection, equipment manufacturing, component installation).

2. Inspections and tests, and location of inspections and tests that were made.

3. Results of inspections.

4. Reports of tests performed, including those specified, with the results of the tests, and acceptance criteria, including failures and remedial action to be taken. Test results, including all computations, shall be attached to the report form. Where test results cannot be completed by the time the report is submitted, a notation shall be made that the test was performed, including the approximate expected date that test results will be reported.

5. Report of any nonconforming items/activities. Nonconformance report forms designed solely for this purpose shall be utilized.

6. Results of inspections of material and equipment done upon their arrival at the Jobsite and prior to their incorporation into the Work. This includes, but is not limited to, compliance with approved submittals, damage, and proper storage requirements.

7. Offsite quality control activities.

8. Instructions received from the ENGINEER or INSPECTOR.

9. In all cases, the report must be verified and signed by the CONTRACTOR'S representative. The verification is to contain the statement that all supplies and materials incorporated in the Work are in compliance with the terms of the Contract except where noted.

C. 3 Week Look Ahead Schedule

During the construction phase of the Work, the CONTRACTOR shall submit 3 Week Look Ahead reports to the ENGINEER at the weekly progress meetings or as directed by the ENGINEER. The report shall include the following information:

1. Type of work under way during the time frame of the report (e.g., earthwork, concrete work, structural steel erection, equipment manufacturing, component installation).

D. Miscellaneous Submittals

CONTRACTOR shall prepare a Daily Construction Report recording the following information concerning events at the job-site and submit original copies to the ENGINEER at weekly intervals for approval:

1. List of Subcontractors and Sub-Subcontractors at the site, types of works and job location.

2. Count of CONTRACTOR'S personnel at the site, name, type of work, hours completed and job location.

3. Construction equipments at the site.

4. High and low temperatures, general weather conditions.

END OF SECTION

# SECTION 01330 SUBMITTALS

## 1.1 THE REQUIREMENT

A. The CONTRACTOR shall furnish a schedule and list of all required submittals to the ENGINEER, including required submittals by all Subcontractors.

B. Wherever called for in these Specifications or on the plans, or where required by the ENGINEER, the CONTRACTOR shall furnish to the ENGINEER for review, two (2) hard copies and one electronic (PDF) copy of each submittal. The term "submittal" as used herein shall be understood to include detail design calculations, design drawings, shop drawings, fabrication and installation drawings, erection drawings, lists, graphs, operating instructions, catalog sheets, data sheets, samples, and similar items. Unless otherwise required, said submittals shall be submitted to the ENGINEER at a time sufficiently early to allow review of same by the ENGINEER and to accommodate the rate of Construction Progress required under the Contract without delaying the Contract Work and with due regard for the possibility of resubmittals. All submittals shall be in English.

C. All design or shop drawings or other submittals shall be accompanied by a transmittal form for each submittal. Any submittal not accompanied by such a form may be returned, at the ENGINEER'S discretion, for resubmittal.

D. Normally, a separate transmittal form shall be used for each specific item or class of material or equipment for which a submittal is required. Transmittal of a submittal of various items using a single transmittal form will be permitted only when the items taken together constitute a manufacturer's "package" or are so functionally related that expediency indicates a review of the group or package as a whole. A multiple-page submittal shall be collated into sets, and each set shall be stapled or bound, as appropriate, prior to transmittal to the ENGINEER.

E. Shop Drawings shall show in detail the size, sections, and dimensions of all the member(s); the arrangement and construction of all connections and joints; all holes, straps, and other fittings required for attaching work and other pertinent details. When required, engineering computations shall be submitted. The CONTRACTOR shall be responsible for delivering reviewed copies of shop Drawings to all others whose work is dependent thereon. The CONTRACTOR shall maintain at the site of the Project, at all times, a complete file of approved Shop Drawings and manufacturers' data for this Project.

F. Except as may otherwise be provided herein, the ENGINEER will return prints of each submittal to the CONTRACTOR, with its comments noted thereon, within twenty (20) calendar days following their receipt by the ENGINEER. It is considered reasonable that the CONTRACTOR shall make a complete and acceptable submittal to the ENGINEER by the second submission of a submittal

item. The CITY reserves the right to withhold moneys due the CONTRACTOR to cover additional costs of the ENGINEER'S review beyond the second submittal. Submittal will be returned to the CONTRACTOR with one of four (4) markings:

1. If a submittal is returned to the Contractor marked "NO EXCEPTIONS," formal revision and resubmission of said submittal will not be required.

2. If a submittal is returned to the Contractor marked "EXCEPTIONS NOTED," formal revision and resubmission of said submittal will not be required, unless specifically requested.

3. If a submittal is returned to the Contractor marked "RETURNED FOR CORRECTION," the Contractor shall revise said submittal and shall resubmit the originally required number of copies of said revised submittal to the Engineer.

4. If a submittal is returned to the Contractor marked "NOT ACCEPTABLE," the Contractor shall revise said submittal and shall resubmit the originally required number of copies of said revised submittal to the Engineer.

G. All Work for which Shop Drawings are required shall be performed in accordance with the reviewed and approved copies. Fabrication of an item shall not commence before the ENGINEER has reviewed the pertinent submittal and returned the copies to the CONTRACTOR marked either "NO EXCEPTIONS TAKEN," or "MAKE CORRECTIONS NOTED“. Revisions indicated on submittals shall be considered as changes necessary to meet the requirements of the Contract Documents and shall not be taken as the basis for claims for extra work.

H. All CONTRACTOR submittals shall be carefully reviewed by an authorized representative of the CONTRACTOR prior to submission to the ENGINEER. Each submittal shall be dated, signed, and certified by the CONTRACTOR as being correct and in strict conformance with the Contract Documents. No consideration for review by the ENGINEER of any CONTRACTOR’S submittal will be made for any items which have not been so certified by the CONTRACTOR. All noncertified submittals will be returned to the CONTRACTOR without action taken by the ENGINEER, and any delays caused thereby shall be the total responsibility of the CONTRACTOR.

I. Should the Shop Drawings or manufacturers data (for submittals required by the Standard Specifications or the specifications) show variations from the Contract requirements, the CONTRACTOR shall make specific mention of such variations in the letter of transmittal, in order that, if acceptable, suitable action may be taken for proper adjustment of the Contract; otherwise the

CONTRACTOR will not be relieved of the responsibility for executing the work in accordance with the Contract Documents, and the approved submittals.

J. The ENGINEER'S review of CONTRACTOR'S submittal shall not relieve the CONTRACTOR of the entire responsibility for the correctness of details and dimensions and conformance to the Specifications. The CONTRACTOR shall assume all responsibility and risk for any misfits due to any errors in the submittal. Any fabrication or other work performed in advance of the receipt of accepted submittals shall be entirely at the CONTRACTOR'S risk and expense. The CONTRACTOR shall be responsible for the dimensions and the design of adequate connections and details.

K. CONTRACTOR'S Coordination:

1. ENGINEER will return and will not review unrelated submittals.

2. The CONTRACTOR may be required to provide drawings, setting diagrams and similar information necessary for proper coordination of Contracted Work. Such data shall remain between the CONTRACTOR and CONTRACTOR'S Subcontractor and will not be reviewed by the ENGINEER unless specifically called for in the Contract Documents.

3. ENGINEER will not review any required Structural Shop Drawings, Structural Calculations, etc., not prepared or signed by a State of California licensed ENGINEER.

4. ENGINEER will return and will not review any submittal requiring coordination with other submittals until such other submittals or required information is received by the Consultant or ENGINEER.

L. CONTRACTOR'S Submittals: CONTRACTOR'S submittals required for performance of Contracted Work, shall include, but are not limited to, the following:

1. Schedule of Values for all Lump Sum items within the Proposal.

2. Construction Schedule and Notification to ENGINEER of completion of each milestone or percentage increment of the Work as required.

3. Submittal Schedule

4. Daily Construction Reports

5. Shop Drawings and Structural Calculations.

6. Manufacturer's Data and Specifications.

7. Samples

8. Templates

9. Certificate of Compliance

10. Construction Photographs

11. Substitutions

12. Record Drawings and Record Project Manual

13. Operation & Maintenance Manuals

14. Stock Materials, Spare parts, tools

15. Material Testing Results

16. Maintenance Logs and Maintenance Schedule.

M. CONTRACTOR shall conform to the provisions of the Contract Document and as may be specifically directed by the ENGINEER.

1. Preparation and processing of submittals shall be coordinated with Contracted Work operations, which include fabrication, purchasing and delivery of work items so as not to delay Contracted Work operations.

2. In each copy of the Submittal, mark every applicable material, product, equipment, manufacturer's data, product information, color samples, rating or values, part and model numbers, etc. by red color circle. Each of the submittal items must be clearly distinguishable from other unrelated or similar items listed in the Manufacturer's Catalog or Technical Specifications, Manuals, etc.

N. Coordination and Submittals:

1. Carefully review and coordinate all aspects of each item being submitted.

2. Carefully review contract drawings and technical sections, verify all work as laid out or indicated meeting the applicable codes and standards.

3. Ensure ample time for reviewing and processing of the submittals by the CITY or other authorized agencies, delays resulting from improper and untimely submittals shall be the responsibility of the CONTRACTOR.

4. Verify that all such submittal items conform to the Project Manual requirements noted in the Technical Sections.

5. Verify all site conditions and provide all required dimensions and measurements in Shop Drawings.

6. Where necessary, review the CITY'S comments, make changes and resubmit to local governing agencies for approval. Furnish the ENGINEER copies of the approved plans or drawings for review.

O. CONTRACTOR shall affix to each submittal, the CONTRACTOR'S signature certifying that required coordination has been performed and include on an attached label for processing and recording action taken, noting the following:

1. Name of the Project

2. Date of the Submittal

3. Name and address of Consultant

4. Name and address of the CONTRACTOR

5. Name and address of the Subcontractor(s)

6. Name and address of the Supplier

7. Name and address of the Manufacturer

8. Reference to Specification Section Number and Title

9. Reference to Drawing Sheet Number and detail(s)

10. Submittal Number

11. Priority Number and expected return date.

**END OF SECTION**

THIS PAGE INTENTIONALLY LEFT BLANK

# THE CITY OF REDLANDS
## MUNICIPAL UTILITIES AND ENGINEERING DEPARTMENT

## SUBMITTAL COVER SHEET

| | | | |
|---|---|---|---|
| **Project Name:** | | **Submittal Number:** | |
| **Project Number:** | | **Date of Submittal:** | |
| **Submitted By:** | | | |

| | |
|---|---|
| **Submittal Title:** | |

| | | | |
|---|---|---|---|
| **Priority Type (Select One):** | ☐ Low | ☐ Normal | ☐ High |

| | | |
|---|---|---|
| **Submittal Type (Select One):** | ☐ Pre-Construction | ☐ Post-Construction |

| **Category (Select One):** | |
|---|---|
| ☐ Product Data | ☐ Close-Out |
| ☐ Shop Drawing | ☐ Warranty |
| ☐ Mock Up | ☐ Test Report |
| ☐ Sample | ☐ Operation / Maintenance Manual |
| ☐ Certification | ☐ MSDS – Material Safety Data Sheets |
| ☐ As-Built | |

# THE CITY OF REDLANDS
## MUNICIPAL UTILITIES AND ENGINEERING DEPARTMENT

## REQUEST FOR INFORMATION (RFI)

| | | | |
|---|---|---|---|
| **Project Name:** | | **RFI Number:** | |
| **Project Number:** | | **Date of RFI:** | |
| **Submitted By:** | | | |

| | |
|---|---|
| **RFI Title:** | |

| | | |
|---|---|---|
| **Work Impact? (Select One):** | ☐ No | ☐ Unknown |
| | ☐ Yes – Work Impeded | ☐ Yes – Work Stopped |

| **Question:** |
|---|
| |
| |
| |
| |
| |
| |

| **Proposed Solution (Optional):** |
|---|
| |
| |
| |
| |
| |
| |

**Requestor:**

**Signature:** _____

**Title:** _____ **Date:** _____

# SECTION 01571 STORMWATER POLLUTION PREVENTION PLAN

## PART 1 - GENERAL

This project is subject to the requirements of the General Permit for Storm Water Discharges associated with Construction and Land Disturbance Activities, under the California State Water Resources Control Board. Order No. 2009-0009-DWQ, CAS000002, and all amendments. All permit related documents can be located at the State Water Resources Control Board (SWRCB) website at www.waterboards.ca.gov. This project lies within the boundaries of the Santa Ana Regional Water Quality Control Board (RWQCB). The project is also covered by the municipal MS4 permit, Santa Ana-Order No. R8-2010-0036. Guidance manuals applicable to this project are the California Best Management Practices Handbooks found at www.cabmphandbooks.com.

The Contractor shall be responsible for complying with the SWPPP and all laws, codes, ordinances, and requirements of the governing agencies regarding the discharge of pollutants, pollution control devices, and any other related stormwater and non-stormwater requirements for this project, including but not limited to reporting, sampling, and amendments.

The Contractor shall have the necessary training and certifications to implement the SWPPP, conduct inspections and maintain the required water pollution control practices. See Section "QUALIFIED SWPPP PRACTITIONER (QSP)".

The Contractor shall follow all requirements of the prepared job specific Storm Water Pollution Prevention Plan (SWPPP) including the Construction Site Monitoring Program Requirements (CSMP). The contractor shall provide a Qualified SWPPP Practitioner (QSP) to implement all requirements of the SWPPP. The QSP shall be responsible for monitoring and sampling as required by the CSMP.

Approval of the SWPPP must be completed prior to the start of construction activity. However, the contract time will commence.

## PART 2 - STORMWATER POLLUTION PREVENTION PLAN PREPARATION

If required under Order No. 2009-0009-DWQ, CAS000002, or its amendments, the Contractor shall prepare a SWPPP for the project. The SWPPP provides the general stormwater approach for the project and the minimum necessary BMPs. The contractor shall provide a Qualified SWPPP Practitioner (QSP) for this project and submit to the City copies of the required certifications or registrations for the QSP prior to SWPPP approval.

The California Storm water Quality Association (CASQA) has prepared a SWPPP template for use with Order No. 2009-0009-DWQ, CAS000002. The SWPPP template provides the general storm water approach for the project and the minimum necessary BMPs. The SWPPP template is not to be a considered a final and complete document until it has been completed and approved by a Qualified SWPPP Developer (QSD). The QSD is expected to include in the updated Final

SWPPP necessary details pertaining to the methods and scheduling of construction and any additional necessary BMPs, based on the project approach.

The QSD shall use the CASQA SWPPP template for preparation of the SWPPP. The Caltrans SWPPP template shall not be used.

Within 5 days of the Notice to Proceed, Contractor shall submit two (2) hardcopies of the draft Storm Water Pollution Prevention Plan (SWPPP) for review. SWPPP review shall be in accordance with the requirements set forth in Section 01330 of the General Requirements. Once all of the noted revisions have been made and the SWPPP is complete for submittal to the State, two (2) final signed hardcopies and one (1) electronic copy of the SWPPP must be submitted to the Engineer for acceptance. The Contractor shall keep one copy of the approved SWPPP and approved amendments at the project site. The SWPPP shall be made available upon request by a representative of the City of Redlands, the Regional Water Quality Control Board or the State Water Resources Control Board. Requests made by the public or other third-parties for review of the SWPPP shall be directed to the Project Engineer. The Contractor shall notify the Engineer immediately when regulatory agencies request to enter, inspect, sample, monitor, or otherwise access the project site or the Contractor's records pertaining to the water pollution control work. Contractor shall immediately send all correspondences, notices of violation, enforcement actions or proposed fines, issued by a regulatory agency, to the Engineer.

The SWPPP shall be updated or amended as necessary or as required for compliance purposes. All updates to the SWPPP shall be per the guidelines contained therein. A copy of the SWPPP must be kept at the project site at all times. In the case of a linear construction project (water, sewer, street), where no field office has been established, the copy of the SWPPP shall be kept by the contractor's foreman in the vicinity of the actual construction and made available within thirty (30) minutes of request. The SWPPP shall be made available upon request by a City Inspector, a representative of the Regional Water Quality Control Board or the State Water Resources Control Board. Requests made by the public or other third parties for review of the SWPPP shall be directed to the City Engineer.

## PART 3 - SWPPP IMPLEMENTATION

Unless otherwise specified, the Contractor shall be responsible throughout the duration of the project for installing, constructing, inspecting, maintaining, removing, and disposing of the water pollution control devices; and practices specified in the SWPPP, its amendments, or by the City Inspector. Unless otherwise directed by the City Engineer, the Contractor's responsibility for SWPPP implementation shall continue throughout temporary suspensions of work, regardless of reason, unless specified otherwise in writing by the City Engineer. Requirements for installation, construction, inspection, maintenance, removal, and disposal of water pollution control devices and practices shall conform to the requirements in the SWPPP and these special provisions.

The National Weather Service (http://www.srh.noaa.gov/) weather forecast shall be monitored and used by the Contractor on a daily basis. If there is a forecast of 50% or greater probability of precipitation in the project area, the necessary water pollution control devices, plans and practices shall be deployed prior to the onset of the precipitation and immediate notice provided

to the City Engineer. The contractor's QSP shall be required to prepare and submit a Rain Event Action Plan (REAP), if required, any time the probably of rainfall is 50% or greater.

For the purposes of erosion and sediment control, disturbed soil areas shall be considered active whenever the soil disturbing activities have occurred, continue to occur or will occur during the ensuing 14 days. Non-active areas shall be protected as prescribed in the General Construction Permit within 14 days of cessation of soil disturbing activities or prior to the onset of precipitation, whichever occurs first.

If the City Inspector finds the contractor is not in compliance with the SWPPP or any other applicable pollution control laws or regulations, the City Inspector shall direct the contractor to correct the violation. The Contractor shall immediately take measures to correct the violation or notify the City Engineer in writing why correcting the violation immediately is not possible and provide a timetable by which the violation will be corrected. The City Engineer may accept the timetable, reject it or modify it. Under no circumstances will the contractor submit a timetable that exceeds the duration of construction in the immediate area. If the Contractor fails to correct the identified violation by the date agreed upon or prior to the onset of precipitation, the project shall be in nonconformance with these specifications and subject to the remedies as described in Section "LEGAL RELATIONS AND RESPONSIBILITY".

Installing, inspecting and maintaining water pollution control practices on areas outside the City of Redlands right of way, not specifically arranged and provided for by the City of Redlands in the execution of this contract, will not be paid for without prior written approval.

No work required by regulatory agencies, and for which the Contractor would request additional compensation from the City, shall be started without prior approval from the City Engineer.

## PART 4 - MAINTENANCE

To ensure the proper implementation and correct functioning of water pollution control devices and practices, the Contractor shall assign a Qualified SWPPP Practitioner (QSP) to regularly inspect and maintain the construction site's water pollution control devices and practices as identified in the SWPPP. The frequency of the inspections shall be in accordance with the SWPPP. In the event of multiple consecutive violations, the City Engineer may increase the frequency of the inspections. These additional inspections shall be at the Contractor's expense based on the current adopted resolution establishing such fees.

The QSP/Contractor shall document the inspections findings, using photographs and a written narrative, and if necessary, make the necessary corrections to the water pollution control practices or devices. One copy of each site inspection record shall be submitted to the City Engineer within 5 working days of completing the inspection. The QSP/Contractor shall submit one copy of each Rain Event Action Plans (REAP), when required, within 12 hours of anticipated precipitation event. The QSP/Contractor shall also submit one copy of each monitoring/sampling report, when required, within 24 hours of receiving the results. The contractor shall be responsible for all expenses incurred in the reporting process.

## PART 5 - REPORTING REQUIREMENTS - DISCHARGE

If the Contractor identifies discharges leaving the construction site or flowing into drainage systems or surface waters in a manner causing, or potentially causing, a condition of pollution, or if the project receives a written notice or order from a regulatory agency, the Contractor shall immediately inform the City Engineer. The Contractor shall submit a written report to the City Engineer in less than 24 hours of the discharge event, notice, or order. The report shall include the following information:

A. The date, time, location, nature of the operation, and type of discharge, including the cause or type of the notice or order Contractor received.

B. The water pollution control practices deployed before the discharge event, or prior to receiving the notice or order.

C. The date of deployment and type of water pollution control practices deployed after the discharge event, or after receiving the notice or order, including additional measures installed or planned to reduce or prevent reoccurrence.

D. An implementation and maintenance schedule for affected water pollution control practices.

The contractor shall also submit any reports required by the SWPPP or the General Permit for Storm Water Discharges associated with Construction and Land Disturbance Activities to the appropriate agencies. The contractor shall be responsible for all expenses incurred in the reporting process. Any required sampling shall be done by the contractor or his QSP in compliance with the SWPPP.

## PART 6 - REPORTING REQUIREMENTS – ANNUAL REPORT and NOTICE OF TERMINATION

The contractor shall be responsible for preparing the Annual Report. The Annual report shall be prepared per Section XVI. ANNUAL REPORTING REQUIREMENTS of the General Permit for Storm Water Discharges associated with Construction and Land Disturbance Activities, under the California State Water Resources Control Board. Order No. 2009-0009-DWQ, CAS000002. The Annual Report must be prepared by or under the direction of a QSP.

1) The contractor or QSP shall prepare an Annual Report no later than August 15th of each year.

2) The contractor or QSP shall certify each Annual Report in accordance with the Special Provisions.

3) The contractor or QSP shall retain an electronic or paper copy of each Annual Report for a minimum of three years after the date the annual report is filed.

4) The contractor or QSP shall include storm water monitoring information in the Annual Report consisting of:

   a) A summary and evaluation of all sampling and analysis results, including copies of laboratory reports;

   b) The analytical method(s), method reporting unit(s), and method detection limit(s) of each analytical parameter (analytical results that are less than the method detection limit shall be reported as "less than the method detection limit");

   c) A summary of all corrective actions taken during the compliance year;

   d) Identification of any compliance activities or corrective actions that were not implemented;

   e) A summary of all violations of the General Permit;

   f) The names of individual(s) who performed the facility inspections, sampling, visual observation (inspections), and/or measurements;

   g) The date, place, time of facility inspections, sampling, visual observation (inspections), and/or measurements, including precipitation (rain gauge); and

   h) The visual observation and sample collection exception records and reports specified in Attachments C, D, and E.

5) The contractor or QSP shall provide training information in the Annual Report consisting of:

   a) Documentation of all training for individuals responsible for all activities associated with compliance with this General Permit; 2009-0009-DWQ 40 September 02, 2009 Order 2009-0009-DWQ 41 September 02, 2009

   b) Documentation of all training for individuals responsible for BMP installation, inspection, maintenance, and repair; and

   c) Documentation of all training for individuals responsible for overseeing, revising, and amending the SWPPP.

A copy of the Annual Report shall be submitted to the City no later than 9 A.M. each August 15th. In the event August 15th is a Friday, Saturday, or Sunday, the report shall be submitted no later than 5 P.M. on the Thursday prior to August 15th. If the project is completed prior to August 1st, regardless of when the project started, the Annual Report is due within two weeks of project completion. The contractor shall submit two hard copies of the annual report and one digital copy in PDF format on compact disc (CD).

Failure to submit the Annual report within the timeframes specified will result in progress payments and/or retention release being delayed and/or withheld. The City of Redlands, at its discretion, may complete the annual report based on records provided by the contractor. The contractor shall reimburse the city the full cost of creating the Annual Report along with an administrative fee not to exceed 1.7 times the total cost. The contractor shall also be liable for any fines or judgments levied by the Regional Water Quality Control Board against the City of Redlands as a result of the contractors failure to provide the annual report within the time frames listed above.

Under no circumstances does the submittal of a copy of the Annual Report to the City of Redlands relieve the contractor of his responsibility to maintain the Annual Report records for a minimum of three years after the date of submittal.

The contractor shall be responsible for preparing the Notice of Termination. The Notice of Termination shall be prepared within 30 days of the cessation of construction and shall meet all the requirements of the General Permit for Storm Water Discharges associated with Construction and Land Disturbance Activities, under the California State Water Resources Control Board. Order No. 2009-0009-DWQ, CAS000002. The Notice of Termination must be prepared by or under the direction of a QSP.

Along with submitting the Notice of Termination to the City of Redlands, the QSP shall submit one (1) hard copy and one (1) electronic copy of the Storm Water Pollution Prevention Plan (SWPPP), including all inspection reports, photographs and other documents as required by the General Permit for Storm Water Discharges associated with Construction and Land Disturbance Activities, under the California State Water Resources Control Board. Order No. 2009-0009-DWQ, CAS000002, to the Engineer.

## PART 7 - WATER POLLUTION BEST MANAGEMENT PLAN (BMP) BUDGET

The Contractor shall submit a completed Water Pollution BMP budget, which itemizes the BMPs for water pollution control work. The Contractor shall identify items, quantities, and values for all water pollution control work. The Water Pollution BMP budget shall provide a cost breakdown for the water pollution control work based on BMP quantity, unit cost, and total amount.

The Contractor shall be responsible for the accuracy of the quantities and values used in the Water Pollution BMP budget. Partial payment for the item of water pollution control will not be made until the Water Pollution BMP budget is approved by the Engineer. Overhead and profit, except for time-related overhead, shall be included in the individual line items listed in the Water Pollution BMP budget. Line item quantities indicated in the Water pollution BMP budget in this section shall be considered project-specific minimums. All the BMPs listed in the Water Pollution Control BMP budget can be referenced in the CASQA Construction BMP Handbook.

## PART 8 - PAYMENTS AND PENALTIES

The Water Pollution BMP budget shall include full compensation for furnishing labor, materials, tools, equipment and incidentals for doing all the work involved in reviewing, updating, and implementing a Storm Water Pollution Prevention Plan, including installing, constructing, removing and disposing of water pollution control devices and practices, and non-stormwater management and waste management and no additional compensation will be allowed, unless there is a separate prior approval in writing by the City Engineer.

It shall be understood that the City of Redlands and/or the City Engineer's acceptances does not relieve the Contractor of his/her full responsibility, legally and/or financially, to repair damages resulting from inadequacy and/or insufficiency of water pollution control devices and practices that were installed by the Contractor during construction activity.

## PART 9 - LEGAL RELATIONS AND RESPONSIBILITY

The City Inspector may use any of the following measures if violations are not corrected in a timely manner or if the violation may present a danger to public health or to the environment; notices of correction or violation, stop work orders, citations, and using City staff or third party contractors to correct the problem. In the event that the above measures do not resolve the issues, the City Inspector shall inform the State Water Resources Control Board (SWRCB) of the violation and request their intervention.

The Contractor shall be solely responsible for penalties assessed or levied on the Contractor or the City of Redlands as a result of the Contractor's failure to comply with the provisions in this section, including but not limited to, compliance with the applicable provisions of the Permits, the Manuals, and Federal, State and local regulations and requirements as set forth, therein. Penalties shall also include payment made or cost incurred in settlement for alleged violations of the Permits, the Manuals, or applicable laws, regulations or requirements, Costs incurred could include sums spent instead of penalties, in mitigation or to remediate or correct violations. This shall apply regardless of the source issuing the penalties.

In the event a stop work order has been issued, the days passing between the discovery of the violation until the violation has been resolved and the stop work order has been lifted, shall be considered "working" days and shall not negate any claims by the City of Redlands for liquidated damages.

If the Contractor fails to correct violations immediately or within the time table established with the City Engineer, the City of Redlands may elect to use City staff or a third party to bring the project into compliance. The Contractor shall be responsible for the cost incurred by the City of Redlands when using City staff or a third party to bring the project into compliance. The City of Redlands reserves the right to add an additional fifteen (15) percent to the costs to cover administrative expenses.

## PART 10 - RETENTION OF FUNDS

Notwithstanding any other remedies authorized by law, the City of Redlands may retain money due the Contractor under the contract, in an amount determined by the City, up to and including the entire amount of penalties proposed, assessed or levied as result of the Contractor's violation of the Permits, the Manuals, or Federal or State law, regulations or requirements. Funds may be retained by the City until final disposition has been made as to the Penalties. The Contractor shall remain liable for the full amount of penalties until such time as they are resolved with the entity seeking the penalties.

When a regulatory agency or third party identifies a failure to comply with the Permits and modifications, thereto, the Manuals, or other Federal, State or local requirements, the City of Redlands may retain money due to the Contractor, subject to the following:

A. The amounts retained, due to Contractor's failure to conform to the provisions in this section, will be released for payment on the next monthly estimate for partial payment providing the corrections have been implemented and maintained and when water pollution has been adequately controlled, as determined by the City Engineer.

During the estimated period that the Contractor fails to conform to the provisions in this section, the City may retain an amount equal to 25 percent of the estimated value for the contract work performed.

PART 11 - QUALIFIED SWPPP PRACTITIONER (QSP)

The General Construction Permit requires a Qualified SWPPP Practitioner (QSP) to oversee implementation of the BMPs and to ensure proper project oversight. Any contractors bidding and/or awarded a contract for any projects for the City of Redlands subject to the provisions of the General Permit shall employ a QSP. Prior to being awarded a construction contract, the successful bidder shall submit the name of the QSP to the City or Redlands for approval.

The QSP shall be responsible for the elimination of all unauthorized discharges and the preparation and submittal of an annual compliance evaluation report.

END OF SECTION

# SECTION 01581 CONSTRUCTION INFORMATION SIGNS

## 1.1 THE REQUIREMENT

The City shall provide the Contractor with all required construction information signs for the project. The signs shall be installed at the locations noted in the plans, if included, or as otherwise directed by the Engineer. If the project consists of numerous sites, the construction information signs shall be relocated to each site as work progresses. The construction signs shall be installed the same day work commences on any construction site. If the sign is not installed prior to construction work beginning at a subsequent site, the City will install the information signs at the Contractor's expense.

The installation of each sign shall be the responsibility of the contractor to include mounting posts, hardware and any related incidentals to ensure the sign is placed in a safe and secure manner. For any sign required for multiple site projects, where the sign is frequently relocated and not anticipated to be installed in the ground on posts, the Contractor shall provide a Type III barricade for mounting. The contractor shall obtain approval from the Engineer following installation of the construction information sign. If the signs are installed in the ground with posts, proper vertical clearance shall be provided. The minimum vertical clearance shall be six feet within a parkway area and seven feet within the sidewalk.

The construction information sign shall remain visible at all times. The contractor shall replace stolen signs at their expense and maintain the signs, ensuring all graffiti, soil, paint, etc. is removed from the sign immediately. Upon completion of the project, each sign shall be removed and returned to the City. If the sign is not returned to the City at the completion of the project in the original condition, the cost of the sign shall be withheld from the final progress payment.

The Contractor shall notify Underground Service Alert (Dig alert) at least 2 working days, but not more than 14 calendar days, prior to performing any excavation.

Full compensation for furnishing all labor, equipment, materials, and tools required to perform the tasks noted above, and as ordered by the Engineer, shall be considered as being included in the various Contract items of work and no separate or additional compensation will be allowed therefore.

END OF SECTION

THIS PAGE INTENTIONALLY LEFT BLANK

# SECTION 01721 MOBILIZATION

## 1.1 THE REQUIREMENT

### A. General

Whether Mobilization is included as a Contract Bid Item in the Bid Proposal Form or specified as part of the lump sum in the Contract Documents, the cost of labor, equipment, materials and incidentals for doing all the work in mobilization (in advance of construction operations and not directly attributable to any specific bid item) shall be included in the Contract Price Breakdown and progress payment estimate. If there is no mobilization bid item the CONTRACTOR shall submit to the INSPECTOR for approval the Contract Price Breakdown with the amount established for mobilization.

Mobilization shall include, but not be limited to, the following items, all as required for the proper performance and completion of the Work:

1. Obtaining all permits, licenses, insurance, and bonds. Providing copies to the ENGINEER.

2. Moving onto the Jobsite all of CONTRACTOR'S plant and equipment as required.

3. Erecting temporary buildings and other construction facilities.

4. Installing temporary construction power and wiring.

5. Establishing fire protection system for its temporary facilities.

6. Developing construction water supply.

7. Providing field office trailers for the CONTRACTOR, complete with all specified equipment, furnishings, utility services and required approvals from the CITY.

8. Providing sanitary facilities or connecting to onsite sanitary facilities as specified.

9. Providing for potable water facilities as specified. This includes a means by which all on site CONTRACTOR, Subcontractor or supplier personnel can wash their hands with soap.

10. Arranging for, and erection of, CONTRACTOR'S work and storage yards and sheds.

11. Submitting all required Subcontractor insurance certificates and bonds.

12. Posting all CAL/OSHA required notices and establishment of safety programs.

13. Furnishing of Construction Schedule, Contract Price Breakdown and Submittal Schedules.

14. Erecting all temporary fencing, including removal and disposal of existing temporary fencing.

END OF SECTION

# SECTION 01722 SURVEYING

## PART 1 - GENERAL

A. General

1. The CONTRACTOR shall be responsible for all surveys required to layout the Work and for the accuracy of all survey work for construction. The CONTRACTOR shall include the cost of all such survey work in their Bid. The CONTRACTOR shall have all construction surveying performed by a `Licensed Land Surveyor' or a `Civil Engineer' registered by the State of California to perform such work. The ENGINEER reserves the right to verify all survey work done by the CONTRACTOR.

2. The CONTRACTOR shall preserve the initial survey control points for the duration of their usefulness. Monumentation that is subject to disturbance or destruction shall be located and referenced prior to construction and relocated and referenced if necessary after construction, in accordance with the following requirements.

B. Construction Surveys

1. The CONTRACTOR shall provide all reference stakes and form checks necessary for construction and inspection of improvements. All construction staking shall be documented in cut sheets and provided to the ENGINEER. This staking may include but is not limited to: removals, joins, rough grade, slope, utilities, storm drains, sewers, curbs, walks, paving, wall and building stakes; and any other staking necessary for construction and inspection.

C. Reference Or Grade Stakes

1. A reference or grade stake shall be set for each grade change or angle point shown on the plan, standard plan, and shop drawing, in addition to the normal staking interval.

D. Form Checks

1. Forms shall be checked when durable points may be disturbed, removed, or are impractical to be used to verify the design location. The measured location shall be recorded in the survey field notes. All variations from the plan location shall be brought to the attention of the ENGINEER.

E. Staking Intervals And Offset Stake Lines

1. All staking intervals shall be in accordance as directed by the Engineer. Stake lines shall be set at an offset distance from the improvement to ensure proper grade, station, and alignment.

F. Utility Stakes

1. The CONTRACTOR shall provide stakes for all utilities, public or private, that require location or relocation, unless otherwise stated.

G. Additional Survey Work

1. The CONTRACTOR may be required to furnish additional survey work, such as profiles, restakes, Change Orders, etc., at the request of the ENGINEER or the INSPECTOR.

H. Accuracy

1. The CONTRACTOR shall use appropriate surveying methods to obtain the following standards: For fixed works (i.e. cast-in-place concrete; asphalt pavement, pipes and drains; and other items determined by the ENGINEER) the following survey standards shall be used. The absolute horizontal accuracy, in relationship to the Engineer's control, shall be such that the semimajor axis of its 95% error ellipse is ±0.015 foot or less. The absolute vertical accuracy, in relationship to the Engineer's control, shall be such that its standard deviation is ±0.015 foot or less. The relative horizontal accuracy of survey points within the Project shall be such that the semimajor axis of its 95% error ellipse is ±0.015 foot or less. The relative vertical accuracy of survey points within the Project shall be such that its standard deviation is ±0.015 foot or less.

2. For excavation purposes, the following survey standards shall be used. The absolute horizontal accuracy, in relationship to the Engineer's control, shall be such that the semimajor axis of its 95% error ellipse is ±0.1 foot or less. The absolute vertical accuracy, in relationship to the Engineer's control, shall be such that its standard deviation is ±0.1 foot or less. The relative horizontal accuracy of survey points within the Project shall be such that semimajor axis of the 95% error ellipse is ±0.1 foot or less. The relative vertical accuracy of survey points within the Project shall be such that its standard deviation is ±0.1 foot or less.

I. Survey/Inspector

1. The CONTRACTOR shall provide to the INSPECTOR those measurements and control points necessary to determine the location and conformance to the plan, line, and grade of the improvements necessary for inspection purposes.

J. Survey Notes

1. The CONTRACTOR shall supply and keep notes on CITY standard format note sheets. The ENGINEER may request copies of, and otherwise review, survey notes at any time during the construction phase of the Project. Upon completion of the Project, the original survey notes shall become the property of the CITY and shall be delivered to the ENGINEER

PART 2 – MONUMENT PRESERVATION GUIDELINES

A. New & Reconstruction Projects

1. Prior to Construction

a. The public survey records are to be researched for the location of all possible survey monuments within the scope of the project and copies shall be furnished to the survey crew.

b. The survey crew shall diligently search for all survey monuments of record above or below the surface, within the road right-of-way. It is suggested that this search would include the use of a metal detector. When the detector indicates the possibility of a buried survey monument, then digging below the surface to uncover the monument is required.

c. The survey crew shall properly reference all found survey monuments, which may be disturbed or covered during construction, to stable surface points.

d. The authorized surveyor shall properly complete a Corner Record or Record of Survey for the monuments noted in item c, above. Prior to the start of any construction work, the original or a print of the Corner Record or Record of Survey shall be submitted to the County Surveyor for review, signature and filing. A copy shall also be provided to the City prior to the start of construction to provide documentation that the requirement is met.

2. After Construction and Prior to Notice of Completion

a. All covered and disturbed monuments shall be reset with the same or more durable type of monument as the original, in the surface of the construction. Key monuments shall be a minimum 1" inside diameter iron pipe of appropriate length.

b. A monument box or other protective structure is recommended to be placed around key monuments (section corners, quarter section corners).

c. The authorized surveyor shall properly completes a Corner Record or Record of Survey for all set monuments with a change in character, including tag number, and submit it to the County Surveyor for review, signature and filing. A copy shall also be provided to the City prior to the Notice of Completion to provide documentation that the requirement is met.

B. Overlay Projects

1. Prior To Construction

   a. The public survey records are to be researched for the location of all possible survey monuments within the scope of the project and copies shall be furnished to the survey crew.

   b. The survey crew shall diligently search for all survey monuments of record and on the surface of the road. It is suggested the search would include the use of a metal detector. When the detector indicates the possibility of a buried survey monument, then digging below the surface to uncover the monument within 2" of the road surface is recommended.

   c. The survey crew shall properly reference found survey monuments, which may be disturbed or covered during construction, to stable surface points.

   d. The authorized surveyor shall properly complete a Corner Record or Record of Survey for the monuments noted in item 3, above. Prior to the start of any construction work, the original or a print of the Corner Record or Record of Survey shall be submitted to the County Surveyor for review, signature and filing. A copy shall also be provided to the City prior to the start of construction to provide documentation that the requirement is met.

2. After Construction and Prior to Notice of Completion

   a. All covered or disturbed monuments and surface monuments are reset in the new road surface, or a new monument is set in the new road surface above the buried one.

   b. All existing monument boxes will be adjusted to grade or replaced, as appropriate.

   c. A monument box or other protective structure should be placed around key monuments (section corners, quarter section corners).

   d. The authorized surveyor shall properly complete a Corner Record or Record of Survey for all set monuments and existing monuments with a change in character, including tag number and submits it to the County Surveyor for review, signature and filing. A copy shall also be provided to the City prior to the Notice of Completion to provide documentation that the requirement is met.

C. Slurry Seal Projects

1. Prior To Construction

a. The public survey records are to be researched for the location of all possible survey monuments within the scope of the project and copies furnished to for the survey crew.

b. All monument boxes shall be located and steps taken to ensure that the survey monuments inside are readily accessible upon completion of the project.

c. The survey crew shall diligently searches for survey monuments on the surface of the roadway, and identify said monuments recovered in the field to ensure that they will be protected. The survey crew shall inventory the monuments recovered in the field in a manner that allows for their recovery and inspection after construction.

2. After Construction and Prior to Notice of Completion

a. All monument boxes shall be inspected, and appropriate action taken when needed, to ensure that the survey monuments inside are readily accessible.

b. The survey crew shall review the inventory of found monuments by field inspection to ensure that all survey monuments are clean and exposed. Those monuments covered after construction is completed shall be uncovered.

D. Monument Tie Preservation

1. Prior To Construction

a. All existing survey monument ties within the scope of the project shall be researched and identified prior to construction. Surveyor may obtain existing tie sheets from the City as available.

b. If it is determined that all ties for a survey monument may be disturbed during construction, the Surveyor shall relocate the monument ties prior to construction, within improvements that will not be disturbed, and file the revised tie sheet with the City. A minimum of three tie points should reference each centerline monument, whenever possible

2. After Construction and Prior to Notice of Completion

a. If it is determined that the result of construction will not disturb all survey monument ties for a specific monument, the Surveyor shall replace all monument ties disturbed during construction per the following guidelines:

i. Monument ties shall be placed during the finishing process of the concrete improvements.
ii. Monument ties shall be set below the elevation of the adjacent top of curb to provide protection from any future cleaning, maintenance or work around the tie.
iii. A minimum of three tie points should reference each centerline monument, whenever possible.

b. Once the construction is complete, the Surveyor shall prepare a revised tie sheet, and file with the City for all monument ties disturbed during the construction.

END OF SECTION

# SECTION 01732 POTHOLING

## 1.1 THE REQUIREMENT

A. The CONTRACTOR shall conduct exploratory excavations by potholing to verify or to discover the actual locations and the size of existing underground utilities and improvements. The CONTRACTOR shall take care not to damage existing facilities during potholing operations. Any utility or existing facility (including those located by Underground Service Alert - USA) within 3 feet of any trench or excavation shall be potholed prior to starting the contract work in the vicinity. Potholing shall be done in each given area where excavation work is to occur at least fourteen (14) calendar days in advance of any excavation or construction in that area, to avoid possible delay in the progress of the Work.

B. Potholing shall consist of excavations at the locations of utilities or other underground facilities indicated on the Drawings, located by USA, or as directed by the ENGINEER. All costs of potholing operations for the utilities indicated on the Drawings shall be included in the CONTRACTOR'S Bid.

C. If an allowance for "Additional Potholing" has been established and included in the SCHEDULE OF WORK AND PRICES, this allowance shall only be used to reimburse the CONTRACTOR for potholing utilities not shown or otherwise referenced on the drawings, or as directed by the ENGINEER. If the total cost of the Work directed under the Additional Potholing allowance differ from the amount set forth in the SCHEDULE OF WORK AND PRICES, the Contract Price shall be adjusted by a Change Order. The adjustment shall be the difference between the total actual costs and the amount included in the Bid, as an additional amount due to the CONTRACTOR or a credit to the CITY, as appropriate.

D. In addition to the potholes indicated on the Drawings, or directed by the ENGINEER, the CONTRACTOR may opt to do further potholing deemed necessary at no additional cost to the CITY.

E. Potholing operations shall conform to all applicable requirements as to sidewall slopes, sheeting and shoring, and all other excavation and trenching provisions specified herein.

F. Potholes shall be identified and protected in accordance with the Engineer's instructions, the California Manual on Uniform Traffic Control Devices (MUTCD) and Work Area Traffic Control Handbook (WATCH) Standards.

G. The CONTRACTOR'S proposed method of potholing and schedule for potholing shall be submitted to the ENGINEER for approval, at least thirty (30) days prior to the commencement of operation. Any utilities damaged during potholing shall

be immediately reported to the ENGINEER and INSPECTOR and repairs made immediately in accordance with the specifications.

H. A complete log of all potholes shall be kept by the CONTRACTOR, showing specific locations and dimensions of trenches. The log shall be verified by the INSPECTOR prior to the backfilling of the potholes. The verified log will be submitted to the ENGINEER and the INSPECTOR within two (2) working days after completion of potholing in each area. Payment for potholing utilities not shown or otherwise referenced on the drawings, or as directed by the ENGINEER will not be made unless these potholes are listed on the verified log.

I. The CONTRACTOR shall record the coordinates, elevations and dimensions of all utilities and improvements verified or discovered by potholing. The records shall be submitted to the ENGINEER within two (2) working days after the completion of potholing in each area. The records shall also include dates of the potholing operations and any additional discovered information or pertinent data.

J. Upon completion of potholing in each area, and after verification of the logs by the INSPECTOR, potholes shall be immediately backfilled and compacted in accordance with the specifications, or restored as directed by the ENGINEER.

END OF SECTION

# SECTION 01740 DEMOBILIZATION

## 1.1 THE REQUIREMENT

### A. General

Whether Demobilization is included as a Contract Bid Item in the Bid Proposal Form or specified as part of the lump sum in the Contract Documents, the cost of labor, equipment, materials and incidentals for doing all the work in demobilization (upon completion of all contract work and not directly attributable to any specific bid item) shall be included in the Contract Price Breakdown and progress payment estimate. If there is no demobilization bid item the CONTRACTOR shall submit to the INSPECTOR for approval the Contract Price Breakdown with the amount established for demobilization.

Demobilization shall include, but not be limited to, the following items, all as required for the proper performance and completion of the Work:

1. Moving off of the Jobsite all of CONTRACTOR'S plant and equipment as required.

2. Dismantling and removing all temporary buildings and other construction facilities.

3. Dismantling and removing all temporary construction power and wiring.

4. Removing all sanitary facilities from the work site.

5. Remove all waste, debris, and rubbish caused by construction operations within the work area, adjacent properties and public roads.

6. Materials and equipment shall be removed from the site as soon as they are no longer necessary. Before the final inspection, the site shall be cleared of equipment, unused materials and rubbish so as to present a satisfactory clean and neat appearance. All cleanup costs shall be included in the CONTRACTOR'S Bid.

7. Dismantling and removal of all temporary fencing.

8. Provide City with all required As-Built drawings.

9. All required Corner Records have been filed with the County and all copies provided to the City per Section 01722 Surveying.

10. All items noted within the final inspection ("Punchlist") have been completed to the satisfaction of the City.

11. All project photographs as required within Section 01322 Construction Progress Photography have been provided.

12. Notice of Completion (NOC) will not be filed until all work is complete per this Section 01740.

END OF SECTION

# TECHNICAL SPECIFICATIONS

THIS PAGE INTENTIONALLY LEFT BLANK

# SECTION 02222 PROTECTING EXISTING UNDERGROUND UTILITIES

## PART 1 - GENERAL

A. Description

This section includes materials and procedures for protecting existing underground utilities.

B. Related Work Specified Elsewhere

1. General Conditions

## PART 2 - MATERIALS

A. Replacement in Kind

Except as indicated below or as specifically authorized by the Owner's Representative, reconstruct utilities with new material of the same size, type, and quality as that removed.

B. Vitrified Clay Sewer Pipe and Couplings

For sewer pipe 8 inches in diameter or under, replacement shall consist of plain-end pipe conforming to ASTM C 700. Compression couplings shall conform to ASTM C 594, band seal couplings or equal. Use at least two lengths of pipe in crossing the trench section as shown on the details in the drawings.

## PART 3 - EXECUTION

A. General

1. Replace in kind street improvements, such as curbs and gutters, barricades, traffic islands, signalization, fences, signs, etc., that are cut, removed, damaged, or otherwise disturbed by the construction.

2. Where utilities are parallel to or cross the construction but do not conflict with the permanent work to be constructed, follow the procedures given below and as indicated in the drawings. Notify the utility owner 48 hours in advance of the crossing construction and coordinate the construction schedule with the utility owner's requirements. For utility crossings not shown in the drawings, refer to the General Conditions and the instructions of the Owner's Representative for guidance.

3. Determine the true location and depth of utilities and service connections which may be affected by or affect the work. Determine the type, material, and condition of these utilities. In order to provide sufficient lead time to resolve unforeseen conflicts, order materials and take appropriate measures to ensure that there is no delay in work.

4. Expose utilities 1,300 feet in advance of the pipeline construction.

B. Procedures

1. Protect in Place: Protect utilities in place, unless abandoned, and maintain the utility in service, unless otherwise specified in the drawings or in the specifications.

2. Cut and Plug Ends: Cut abandoned utility lines and plug the ends. Plug storm drains and sewers with an 8-inch wall of brick and mortar. Cap waterlines with a cast-iron cap or install a 3-foot-long concrete plug. Dispose of the cut pipe as unsuitable material.

3. Remove and Reconstruct: Where so indicated in the drawings or as required by the Owner's Representative, remove the utility and, after passage, reconstruct it with new materials. Provide temporary service for the disconnected utility.

C. Compaction

1. Utilities Protected in Place: Backfill and compact under and around the utility so that no voids are left.

2. Utilities Reconstructed: Prior to replacement of the utility, backfill the trench and compact to an elevation 1 foot above the top of the ends of the utility. Excavate a cross trench of the proper width for the utility and lay, backfill, and compact.

3. Alternative Construction--Sand Slurry: Sand slurry consisting of one sack (94 pounds) of portland cement per cubic yard of sand and sufficient moisture for workability may be substituted for other backfill materials to aid in reducing compaction difficulties. Submit specific methods and procedures for the review of the Owner's Representative prior to construction.

4. The protection of the utility during construction.

D. Thrust Blocks on Waterlines

Note that restrained joints is the required method of controlling thrust restraint on this project except where shown on the plans or as approved otherwise by the City of Redlands.

1. The Contractor's attention is called to thrust blocks delineated in the drawings for waterlines throughout the project whose thrust is in the direction of the new excavation and, therefore, may be affected by the construction. These waterlines are

owned and operated by the Owner. Protect thrust blocks in place or shore to resist the thrust by a means approved by the Owner and reconstruct. If the thrust blocks are exposed or rendered to be ineffective in the opinion of the Owner's Representative, reconstruct them to bear against firm unexcavated or backfill material.

2. Provide firm support by backfilling that portion of the trench for a distance of 2 feet on each side of the thrust block to be reconstructed from the pipe bedding to the pavement subgrade, with either:

   a. Sand-cement slurry (94 pounds of cement per cubic yard).

   b. The native material compacted to a relative compaction of 95%.

3. Then excavate the backfill material for construction of the thrust block.

4. Test compaction of the backfill material before pouring any concrete thrust block. Use Class 560-C-3250 concrete for reconstruction.

E. Adjacent Parallel Utilities

1. The Contractor's attention is called to utilities throughout the project that are parallel to the proposed utility.

2. The position of these utilities is just outside the new construction. Protect these utilities from any disturbances and repair the lines and associated vaults and appurtenances if they are damaged in any way. All costs incurred for protection of these lines or any costs incurred due to the presence of the lines, whether or not they lie within the new construction, shall be borne in full by the Contractor.

END OF SECTION

THIS PAGE INTENTIONALLY LEFT BLANK

# APPENDIX

THIS PAGE INTENTIONALLY LEFT BLANK

# APPENDIX A
# CHECKLIST OF LABOR LAW REQUIREMENTS

THIS PAGE INTENTIONALLY LEFT BLANK

**CHECKLIST OF LABOR LAW REQUIREMENTS**
**TO REVIEW AT JOB CONFERENCE MEETINGS**

Name (print) _____Date _____

Company _____Project _____

The Federal and State labor law requirements applicable to the contract are composed of, but not limited to, the following:

1. **Payment of Prevailing Wage Rates**
   The contractor to whom the contract is awarded and its subcontractors hired for the public works project are required to pay not less than the specified general prevailing wage rates to all workers employed in the execution of the contract. The contractor is responsible for ascertaining and complying with all current general prevailing wage rates for crafts and any rate changes that occur during the life of the contract. Information on all prevailing wage rates and all rate changes are to be posted at the job site for all workers to view.

2. **Apprentices**
   It is the duty of the contractor and subcontractors to employ registered apprentices on the public works project under Labor Code Section 1777.5.

3. **Penalties**
   There are penalties required for contractor's/subcontractor's failure to pay prevailing wages and for failure to employ apprentices, including forfeitures and debarment under Labor Code Sections 1775; 1776; 1777.1; 1777.7 and 1813.

4. **Certified Payroll Reports**
   Under Labor Code Section 1776, contractors and subcontractors are required to keep accurate payroll records showing the name, address, social security number and work classification of each employee and owner performing work; also the straight time and overtime hours worked each day and each week, the fringe benefits, and, the actual per diem wage paid to each owner, journey person, apprentice worker or other employee hired in connection with the public works project. Employee payroll records shall be certified and shall be made available for inspection at all reasonable hours at the principal office of the contractor/subcontractor, or shall be furnished to any employee, or his/her authorized representative on request, pursuant to Labor Code Section 1776. Each contractor and subcontractor shall submit its weekly certified payroll reports to the LCR from the agency no less than weekly or within ten days of request. In the event that there has been no work performed during a given week, the certified payroll report shall be annotated: "No work" for that week. Under Labor Code Section 1776(h) there are penalties required for contractor's/ subcontractor's failure to maintain and submit copies of certified payroll records on request. **For projects bidding after April 1, all contractors will need to upload their certified payroll to the Department of Labor Standards Enforcement website. Effective Jan. 1, 2016, ALL projects will require contractors to upload all certified payroll. This requirement is in addition to the request for payrolls by the City of Redlands;

5. **Nondiscrimination in Employment**
   There exist prohibitions against employment discrimination under Labor Code Sections 1735 and 1777.6, the Government Code, the Public Contracts Code, and Title VII of the Civil Rights Act of 1964.

6. **Kickbacks Prohibited**
   Contractors and subcontractors are prohibited from recapturing wages illegally or extracting "kickbacks" from employee wages under Labor Code Section 1778.

**7. Acceptance of Fees Prohibited**

There exists a prohibition against contractor/subcontractor acceptance of fees for registering any person for public work under Labor Code Section 1779; or for filling work orders on public works contracts pursuant to Labor Code Section 1780.

**8. Listing of Subcontractors**

All prime contractors are required to list properly all subcontractors hired to perform work on the public works projects covering more than one-half of one percent, pursuant to Government Code 4100 et seq.

**9. Properly Licensed and Registered**

Contractors are required to be licensed properly and to require that all subcontractors be properly licensed. Penalties are required for employing workers while unlicensed under Labor Code Section 1021 and under the California Contractor License Law found at Business and Professions Code Section 7000 et seq. Contractors and subcontractors are also required to be registered with the Division of Labor Standards Enforcement to work on public works projects in California. Requirements for registration and penalties for not being registered are found in Labor Code 1773.3.

**10. Unfair Competition Prohibited**

Contractors and subcontractors are prohibited from engaging in unfair competition as specified under Business and Professions Code Sections 17200 to 17208.

**11. Workers Compensation Insurance**

Labor Code 1861 requires contractors and subcontractors be insured properly for workers compensation.

**12. OSHA**

Contractors and subcontractors are required to abide by the Occupational, Safety and Health laws and regulations that apply to the particular construction project.

**13. Undocumented Workers**

Contractors and subcontractors are prohibited by the Federal government against hiring undocumented workers, and must secure proof of eligibility/citizenship from all workers.

**14. Itemized Wage Statements**

Contractors and subcontractors must provide itemized wage statements to employees per Labor Code 226.

In accordance with Federal and State laws and with the awarding agency contract documents, the undersigned prime contractor wishes to assure the City of Redlands that it intends to comply with the above-referenced labor law requirements, fully understanding that failure to comply with the above requirements may subject it to penalties as provided above.

| **Contractor** | **City of Redlands** |
|---|---|
| _____ | _____ |
| Name Printed | Name Printed |
| _____ | _____ |
| Signature | Signature |
| _____ | _____ |
| Title | Title |
| _____ | _____ |
| Date | Date |

# IMPORTANT NOTICE

## New Requirements for Contractors Working on California Public Works / Prevailing Wage Projects

Significant changes in prevailing wage law have recently been made that affect all contractors working on Public Works Projects within California. Please note the following important information:

**CONTRACTOR REGISTRATION REQUIREMENT**

By April 1, 2015, all contractors must be registered with the Division of Labor Standards Enforcement (DLSE) to work on public works projects in California.

**WHO must register?**
All contractors and subcontractors working on public works projects in California must be registered. This includes prime contractors, subcontractors and sole owner/operators- everyone performing labor on a public works project.

**WHEN is registration required?**
Contractors must be registered with the DLSE to bid on all public works projects that bid after March 1, 2015. All contractors working on public works projects must be registered by April 1, 2015. Registration is valid until June 30 of each year and may be renewed annually. Registrations are currently being accepted.

**WHERE do I register?**
Registration is done online at:
https://efiling.dir.ca.gov/PWCR/ActionServlet?action=displayPWCRegistrationForm

**HOW MUCH is the fee?**
Contractor registration fee is currently set at $300 but may increase each year. This fee shall be paid during the initial registration and each annual renewal.

**DO I qualify for registration?**
Contractors will need to meet minimum qualification standards to be registered. These include:

- Be properly licensed with the Contractors State License Board for your trade.
- Provide evidence of workers compensation insurance (if applicable).
- Be in good standing (Have no outstanding liabilities for wages, damages, penalties due to an employee or the State, may not be under State or Federal debarment).

**WHAT happens if I don't register?**
Unregistered contractors working on or bidding for public works projects will be subject to an immediate $2,000 fine and the $300 registration fee to continue working on the project. Unregistered contractors may be removed from the project by the Awarding Agency. Contractors found working on public works projects without being registered also risk not being approved for registration by DLSE.

**ELECTRONIC CERTIFIED PAYROLL REPORTING REQUIREMENTS**

Prevailing wage law has been changed to require contractors to submit certified payrolls electronically to the DLSE.

**WHO is required to submit certified payrolls?**
All contractors, subcontractors and sole owner/operators will be required to submit certified payrolls electronically to the DLSE.

**WHEN do I need to submit certified payrolls electronically?**
If your project is awarded after April 1, 2015, electronic payroll submission is required immediately. Otherwise, electronic payroll submission will be required for all projects awarded on or after January 1, 2016.

**WHERE do I submit my certified payrolls?**
For now, certified payrolls can be submitted by contractors to the DLSE at: https://apps.dir.ca.gov/ecpr/DAS/AltLogin This website address will change when the DLSE implements their online electronic database system which still has not been developed. Alliant will notify contractors when this system is available.

**DO I still need to submit hard copy certified payrolls?**
The City of Redlands will still require hard copy submission of certified payroll reports per your contract. The requirement to submit certified payrolls electronically to the DLSE does not replace the requirement for contractors to submit payrolls to the City of Redlands.

Contact the City of Redlands regarding any questions you may have regarding the new requirements for contractor registration or online submission of certified payroll: (909) 798-7698.

# PUBLIC WORKS CONTRACT AWARD INFORMATION (DAS-140)

## This is not a request for dispatch of apprentices.

Contract award information must be sent to your Apprenticeship Committee if you are approved to train. If you are not approved to train, you must send the information (which may be this form) to ALL applicable Apprenticeship Committees in your craft or trade in the area of the site of the public work. Go to: **http://www.dir.ca.gov/das/PublicWorksForms.htm** for information about programs in your area and trade. The information shall be provided to the applicable apprenticeship committee within ten (10) days of the date of the execution of the prime contract or subcontract, but in no event later than the first day in which the contractor has workers employed upon the public work.

## Do not send this form to the Division of Apprenticeship Standards.

| | |
|---|---|
| NAME OF YOUR COMPANY | CONTRACTORS STATE LICENSE NO. |
| MAILING ADDRESS-NUMBER & STREET, CITY, ZIP CODE | AREA CODE & TELEPHONE NO. |
| NAME AND ADDRESS OF PUBLIC WORKS PROJECT | DATE YOUR CONTRACT WAS EXECUTED |
| | DATE OF EXPECTED/ACTUAL START OF PROJECT |
| NAME & ADDRESS OF PUBLIC AGENCY AWARDING CONTRACT | ESTIMATED NUMBER OF JOURNEYMAN HOURS |
| | OCCUPATION OF APPRENTICE |
| THIS FORM IS BEING SENT TO: (NAME AND ADDRESS OF APPRENTICESHIP PROGRAM(S) | ESTIMATED NUMBER OF APPRENTICE HOURS |
| | APPROXIMATE/ACTUAL DATES TO BE EMPLOYED |

## This is not a request for dispatch of apprentices.

***Contractors must make a separate request for actual dispatch, in accordance with Section 230.1(a) California Code of Regulations***

Check One of the Boxes Below

1. ☐ We are already approved to train apprentices by the _____ Apprenticeship Committee. We will employ and train under their standards. (Enter name of Committee)

2. ☐ We will comply with the standards of_____ Apprenticeship Committee for the duration of this job only. (Enter name of Committee)

3. ☐ We will employ and train apprentices in accordance with the California Apprenticeship Council regulations, including § 230.1 (c) which requires that apprentices employed on public projects can only be assigned to perform work of the craft or trade to which the apprentice is registered and that the apprentices must at all times work with or under the direct supervision of journeyman/men.

_____
Signature Date

_____
Typed Name

_____
Title

# DAS-140 FORM - PUBLIC WORKS CONTRACT AWARD INFORMATION

**(Title 8, California Code of Regulations, Section 230)**
**(California Labor Code, Section 1777.5 (e))**

## SUBMIT CONTRACT AWARD INFORMATION

Prior to commencing work on a contract for Public Works **every** Contractor shall provide contract award information to the apprenticeship committee for each applicable apprenticeable craft or trade in the area of the site of the public works project that has approved the contractor to train apprentices. Contractors who are not already approved to train by an apprenticeship program sponsor shall provide contract award information to **all** of the applicable apprenticeship committees whose geographic area of operation includes the area of the public works project. This contract award information shall be in writing on a DAS Form 140, Public Works Contract Award Information or a letter which includes the following information:

(1) Contractor's name, address, telephone number and state license number;
(2) The full name and address of the public work awarding agency;
(3) The exact location of the public work site;
(4) Date of the contract award;
(5) Expected start date of the work;
(6) Estimated journeyman hours;
(7) Occupation of Apprentice;
(8) Approximate number of apprentices to be employed; and
(9) Approximate dates apprentices will be employed.

This information shall be provided to the applicable apprenticeship committee within ten (10) days of the date of the execution of the prime contract or subcontract, but in no event later than the first day in which the contractor has workers employed upon the public work.
Failure to provide contract award information, which is known by the awarded contractor, shall be deemed to be a continuing violation for the duration of the contract, ending when a Notice of Completion is filed by the Awarding Body, for the purpose of determining the accrual of penalties under Labor Code Section 1777.7.

**THE TOP SECTION OF THE FORM COMPLETELY FILLED OUT** will provide the information required pursuant to California Labor Code Section 1777.5 and California Code of Regulations Section 230.1.

**LOWER SECTION OF THE FORM** Check an appropriate box (#1, 2 or 3) for your status.

**In addition to the "ORIGINAL(S)" mailed to all applicable Apprenticeship Committees, a copy of this information shall also be submitted to the City of Redlands.**

**NOTE: The filing of a DAS 140 is not a request for the dispatch of registered apprentices**

# CONTRACTOR FRINGE BENEFIT STATEMENT

| Project Name: | Project Location: | Today's Date: |
|---|---|---|
| Contractor / Subcontractor Name: | Business Address: | |

In order that the proper Fringe Benefit rates can be verified when checking payrolls on the above contract, the hourly rates for fringe benefits, subsistence and/or travel allowance payment made for employees by the employer on the various classes of work are tabulated below. Please Include Apprentice Rates.

| Classification: | | Effective Date: | Subsistence or Travel Pay: $_____ |
|---|---|---|---|
| EMPLOYER PAID FRINGE BENEFITS | Health & Welfare<br>$_____ hr | Paid To:<br>Name of Plan/Fund/Program:<br>Address: | _____<br>_____ |
| | Pension<br>$_____ hr | Paid To:<br>Name of Plan/Fund/Program:<br>Address: | _____<br>_____ |
| | Vacation/Holiday<br>$_____ hr | Paid To:<br>Name of Plan/Fund/Program:<br>Address: | _____<br>_____ |
| | Training<br>$_____ hr | Paid To:<br>Name of Plan/Fund/Program:<br>Address: | _____<br>_____ |
| | Other<br>$_____ hr | Paid To:<br>Name of Plan/Fund/Program:<br>Address: | _____<br>_____ |

| Classification: | | Effective Date: | Subsistence or Travel Pay: $_____ |
|---|---|---|---|
| EMPLOYER PAID FRINGE BENEFITS | Health & Welfare<br>$_____ hr | Paid To:<br>Name of Plan/Fund/Program:<br>Address: | _____<br>_____ |
| | Pension<br>$_____ hr | Paid To:<br>Name of Plan/Fund/Program:<br>Address: | _____<br>_____ |
| | Vacation/Holiday<br>$_____ hr | Paid To:<br>Name of Plan/Fund/Program:<br>Address: | _____<br>_____ |
| | Training<br>$_____ hr | Paid To:<br>Name of Plan/Fund/Program:<br>Address: | _____<br>_____ |
| | Other<br>$_____ hr | Paid To:<br>Name of Plan/Fund/Program:<br>Address: | _____<br>_____ |

Supplemental statements must be submitted during the progress of the work should there be an increase or change in rates. Use additional sheets as necessary. (Attach a copy of your most recent premium transmittal (including copy of check submitted) into each of the above plans/funds/programs or a letter from the above plans/funds/programs reflecting current payment status).

I certify under penalty of perjury that fringe benefits are paid to the approved plans, funds or programs as listed above.

| Print Name and Title | Signature and Date (Wet Signature Required) |
|---|---|
| | |

California Department of Industrial Relations

# PUBLIC WORKS PAYROLL REPORTING FORM

Page _____ of _____

NAME OF CONTRACTOR:
OR SUBCONTRACTOR:

CONTRACTOR'S LICENSE NO.:
SPECIALITY LICENSE NO.:

ADDRESS:

PAYROLL NO.:

FOR WEEK ENDING:

SELF-INSURED CERTIFICATE NO.:
WORKERS' COMPENSATION POLICY NO.:

PROJECT OR CONTRACT NO.:
PROJECT AND LOCATION:

| (1) NAME, ADDRESS AND SOCIAL SECURITY NUMBER OF EMPLOYEE | (2) NO. OF WITH-HOLDING EXEMPTIONS | (3) WORK CLASSIFICATION | (4) DAY | M | T | W | TH | F | S | S | (5) TOTAL HOURS | (6) HOURLY RATE OF PAY | (7) GROSS AMOUNT EARNED | | (8) DEDUCTIONS, CONTRIBUTIONS AND PAYMENTS | | | | | | | (9) NET WGS PAID FOR WEEK | CHECK NO. |
|---|---|---|---|---|---|---|---|---|---|---|---|---|---|---|---|---|---|---|---|---|---|---|---|
| | | | | DATE | | | | | | | | | | | | | | | | | | | |
| | | | | HOURS WORKED EACH DAY | | | | | | | | | | | | | | | | | | | |
| | | | S | | | | | | | | | | THIS PROJECT | ALL PROJECTS | FED. TAX | FICA (SOC. SEC.) | STATE TAX | SDI | VAC/ HOLIDAY | HEALTH & WELF. | PENSION | | |
| | | | O | | | | | | | | | | | | TRAING. | FUND ADMIN | DUES | TRAV/ SUBS. | SAVINGS | OTHER* | TOTAL DEDUC-TIONS | | |
| | | | S | | | | | | | | | | THIS PROJECT | ALL PROJECTS | FED. TAX | FICA (SOC. SEC.) | STATE TAX | SDI | VAC/ HOLIDAY | HEALTH & WELF. | PENSION | | |
| | | | O | | | | | | | | | | | | TRAING. | FUND ADMIN | DUES | TRAV/ SUBS. | SAVINGS | OTHER* | TOTAL DEDUC-TIONS | | |
| | | | S | | | | | | | | | | THIS PROJECT | ALL PROJECTS | FED. TAX | FICA (SOC. SEC.) | STATE TAX | SDI | VAC/ HOLIDAY | HEALTH & WELF. | PENSION | | |
| | | | O | | | | | | | | | | | | TRAING. | FUND ADMIN | DUES | TRAV/ SUBS. | SAVINGS | OTHER* | TOTAL DEDUC-TIONS | | |
| | | | S | | | | | | | | | | THIS PROJECT | ALL PROJECTS | FED. TAX | FICA (SOC. SEC.) | STATE TAX | SDI | VAC/ HOLIDAY | HEALTH & WELF. | PENSION | | |
| | | | O | | | | | | | | | | | | TRAING. | FUND ADMIN | DUES | TRAV/ SUBS. | SAVINGS | OTHER* | TOTAL DEDUC-TIONS | | |

S = STRAIGHT TIME
O = OVERTIME
SDI = STATE DISABILITY INSURANCE

*OTHER – Any other deductions, contributions and/or payments whether or not included or required by prevailing wage determinations must be separately listed. Use extra sheet(s) if necessary

CERTIFICATION **MUST** be completed
(See reverse side)

Form A-1-131 (New 2-80)

**Statement of Compliance**

Date:_____

I _____, the undersigned, am the _____ with the authority to act for and on
(Print Name) (Position in Business)
behalf of _____ certify under penalty of perjury that the records commencing on _____ and ending on _____ submitted herein and consisting of ____ pages are the originals, full and corrected documents, which depict the payroll record(s) of actual disbursements by way of cash, check, or whatever form to the individual or individuals names,

(1) That this employer has complied with the requirements of the California Labor Code Sections. 1771, 1811, and 1815 for all performed on this public works project, and that the classifications set forth therein for each trade rate conform with the work Performed.
(2) That any apprentices employed in the above period are duly registered to a bona fide apprenticeship program registered with the State of California's Division of Apprenticeship Standards.

PAYROLL/OTHER DEDUCTIONS

1. I herein certify the *full* and complete Prevailing Wages were paid as currently published and posted by the Director of Industrial Relations, State of California and only deductions as authorized under the laws of the State *of* California or the laws of United States of America have been made from these sums.
2. All other deductions are clearly listed for each employee on an attachment as required by the Director of Industrial Relations, State of California.

OPTIONAL BENEFIT PLANS

I herein certify that all employee deductions for benefit plans are authorized and the employee(s) are signed up for the plan(s) and are receiving the benefit(s) of the plan(s) listed.

☐ WHERE FRINGE BENEFITS ARE PAID TO APPROVED PLANS, FUNDS, OR PROGRAMS
In addition to the basic hourly wage rates paid to each laborer or mechanic listed in the above payroll, payment of fringe benefits as listed in the contract have or will be made to the appropriate programs for the benefit of such employees, except as noted below.

☐ WHERE FRINGE BENEFITS ARE PAID IN CASH
Each laborer or mechanic listed in the above payroll has been paid as indicated on the payroll, an amount not less the sum of the applicable basic hourly rate plus the amount of the required fringe benefits as listed in the determination for the craft, except as noted below,

Exception(s)

Craft Explanation

Craft Explanation

Craft Explanation

Remarks

I herein certify under the penalty of perjury all of the above is true and correct as submitted.

**Name** **Signature**

**Date** **Payroll #**

CONTRACTOR INFORMATION SHEET

Job Name: _____ Category: _____

Prime Contractor: _____

Subcontractor: _____ License#: _____

Address: _____

Phone #: _____ Payroll Report Contact: _____

Email Address: _____

Fax #: _____ Contract Amount: _____

Estimated Start Date: _____ Estimated End Date: _____

ANTICIPATED TRADES/CLASSIFICATIONS:

_____ _____

_____ _____

_____ _____

SUB-CONTRACTORS (if applicable)

Name: License #: Phone/ Fax #: Contact:

_____

_____

_____

# APPENDIX B

# CITY OF REDLANDS WORKDAY CONSTRUCTION SCHEDULE

THIS PAGE INTENTIONALLY LEFT BLANK

# CITY OF REDLANDS

MUNICIPAL UTILITIES AND ENGINEERING DEPARTMENT

# 2025

# APPENDIX B

CONSTRUCTION WORKDAY CALENDAR

## JANUARY

| S | M | T | W | T | F | S |
|---|---|---|---|---|---|---|
| | | | 1 1 | 2 2 | 3 3 | 4 4 |
| 5 5 | 6 6 | 7 7 | 8 8 | 9 9 | 10 10 | 11 11 |
| 12 12 | 13 13 | 14 14 | 15 15 | 16 16 | 17 17 | 18 18 |
| 19 19 | 20 20 | 21 21 | 22 22 | 23 23 | 24 24 | 25 25 |
| 26 26 | 27 27 | 28 28 | 29 29 | 30 30 | 31 31 | |
| | | | | | | |

## FEBRUARY

| S | M | T | W | T | F | S |
|---|---|---|---|---|---|---|
| | | | | | | 1 32 |
| 2 33 | 3 34 | 4 35 | 5 36 | 6 37 | 7 38 | 8 39 |
| 9 40 | 10 41 | 11 42 | 12 43 | 13 44 | 14 45 | 15 46 |
| 16 47 | 17 48 | 18 49 | 19 50 | 20 51 | 21 52 | 22 53 |
| 23 54 | 24 55 | 25 56 | 26 57 | 27 58 | 28 59 | |
| | | | | | | |

## MARCH

| S | M | T | W | T | F | S |
|---|---|---|---|---|---|---|
| | | | | | | 1 60 |
| 2 61 | 3 62 | 4 63 | 5 64 | 6 65 | 7 66 | 8 67 |
| 9 67 | 10 69 | 11 70 | 12 71 | 13 72 | 14 73 | 15 74 |
| 16 75 | 17 76 | 18 77 | 19 78 | 20 79 | 21 80 | 22 81 |
| 23 82 | 24 83 | 25 84 | 26 85 | 27 86 | 28 87 | 29 88 |
| 30 89 | 31 90 | | | | | |

## APRIL

| S | M | T | W | T | F | S |
|---|---|---|---|---|---|---|
| | | 1 91 | 2 92 | 3 93 | 4 94 | 5 95 |
| 6 96 | 7 97 | 8 98 | 9 99 | 10 100 | 11 101 | 12 102 |
| 13 103 | 14 104 | 15 105 | 16 106 | 17 107 | 18 108 | 19 109 |
| 20 110 | 21 111 | 22 112 | 23 113 | 24 114 | 25 115 | 26 116 |
| 27 117 | 28 118 | 29 119 | 30 120 | | | |
| | | | | | | |

## MAY

| S | M | T | W | T | F | S |
|---|---|---|---|---|---|---|
| | | | | 1 121 | 2 122 | 3 123 |
| 4 124 | 5 125 | 6 126 | 7 127 | 8 128 | 9 129 | 10 130 |
| 11 131 | 12 132 | 13 133 | 14 134 | 15 135 | 16 136 | 17 137 |
| 18 138 | 19 139 | 20 140 | 21 141 | 22 142 | 23 143 | 24 144 |
| 25 145 | 26 146 | 27 147 | 28 148 | 29 149 | 30 150 | 31 151 |
| | | | | | | |

## JUNE

| S | M | T | W | T | F | S |
|---|---|---|---|---|---|---|
| 1 152 | 2 153 | 3 154 | 4 155 | 5 156 | 6 157 | 7 158 |
| 8 159 | 9 160 | 10 161 | 11 162 | 12 163 | 13 164 | 14 165 |
| 15 166 | 16 167 | 17 168 | 18 169 | 19 170 | 20 171 | 21 172 |
| 22 173 | 23 174 | 24 175 | 25 176 | 26 177 | 27 178 | 28 179 |
| 29 180 | 30 181 | | | | | |
| | | | | | | |

## JULY

| S | M | T | W | T | F | S |
|---|---|---|---|---|---|---|
| | | 1 182 | 2 183 | 3 184 | 4 185 | 5 186 |
| 6 187 | 7 188 | 8 189 | 9 190 | 10 191 | 11 192 | 12 193 |
| 13 194 | 14 195 | 15 196 | 16 197 | 17 198 | 18 199 | 19 200 |
| 20 201 | 21 202 | 22 203 | 23 204 | 24 205 | 25 206 | 26 207 |
| 27 208 | 28 209 | 29 210 | 30 211 | 31 212 | | |
| | | | | | | |

## AUGUST

| S | M | T | W | T | F | S |
|---|---|---|---|---|---|---|
| | | | | | 1 213 | 2 214 |
| 3 215 | 4 216 | 5 217 | 6 218 | 7 219 | 8 220 | 9 221 |
| 10 222 | 11 223 | 12 224 | 13 225 | 14 226 | 15 227 | 16 228 |
| 17 229 | 18 230 | 19 231 | 20 232 | 21 233 | 22 234 | 23 235 |
| 24 236 | 25 237 | 26 238 | 27 239 | 28 240 | 29 241 | 30 242 |
| 31 243 | | | | | | |

## SEPTEMBER

| S | M | T | W | T | F | S |
|---|---|---|---|---|---|---|
| | 1 244 | 2 245 | 3 246 | 4 247 | 5 248 | 6 249 |
| 7 250 | 8 251 | 9 252 | 10 253 | 11 254 | 12 255 | 13 256 |
| 14 257 | 15 258 | 16 259 | 17 260 | 18 261 | 19 262 | 20 263 |
| 21 264 | 22 265 | 23 266 | 24 267 | 25 268 | 26 269 | 27 270 |
| 28 271 | 29 272 | 30 273 | | | | |
| | | | | | | |

## OCTOBER

| S | M | T | W | T | F | S |
|---|---|---|---|---|---|---|
| | | | 1 274 | 2 275 | 3 276 | 4 277 |
| 5 278 | 6 279 | 7 280 | 8 281 | 9 282 | 10 283 | 11 284 |
| 12 285 | 13 286 | 14 287 | 15 288 | 16 289 | 17 290 | 18 291 |
| 19 292 | 20 293 | 21 294 | 22 295 | 23 296 | 24 297 | 25 298 |
| 26 299 | 27 300 | 28 301 | 29 302 | 30 303 | 31 304 | |
| | | | | | | |

## NOVEMBER

| S | M | T | W | T | F | S |
|---|---|---|---|---|---|---|
| | | | | | | 1 305 |
| 2 306 | 3 307 | 4 308 | 5 309 | 6 310 | 7 311 | 8 312 |
| 9 313 | 10 314 | 11 315 | 12 316 | 13 317 | 14 318 | 15 319 |
| 16 320 | 17 321 | 18 322 | 19 323 | 20 324 | 21 325 | 22 326 |
| 23 327 | 24 328 | 25 329 | 26 330 | 27 331 | 28 332 | 29 333 |
| 30 334 | | | | | | |

## DECEMBER

| S | M | T | W | T | F | S |
|---|---|---|---|---|---|---|
| | 1 335 | 2 336 | 3 337 | 4 338 | 5 339 | 6 340 |
| 7 341 | 8 342 | 9 343 | 10 344 | 11 345 | 12 346 | 13 347 |
| 14 348 | 15 349 | 16 350 | 17 351 | 18 352 | 19 353 | 20 354 |
| 21 355 | 22 356 | 23 357 | 24 358 | 25 359 | 26 360 | 27 361 |
| 28 362 | 29 363 | 30 364 | 31 365 | | | |
| | | | | | | |

City Holiday

# *Redlands Unified School District*
# *Student Attendance Calendar (All Schools)*
# *2025-2026 School Year*

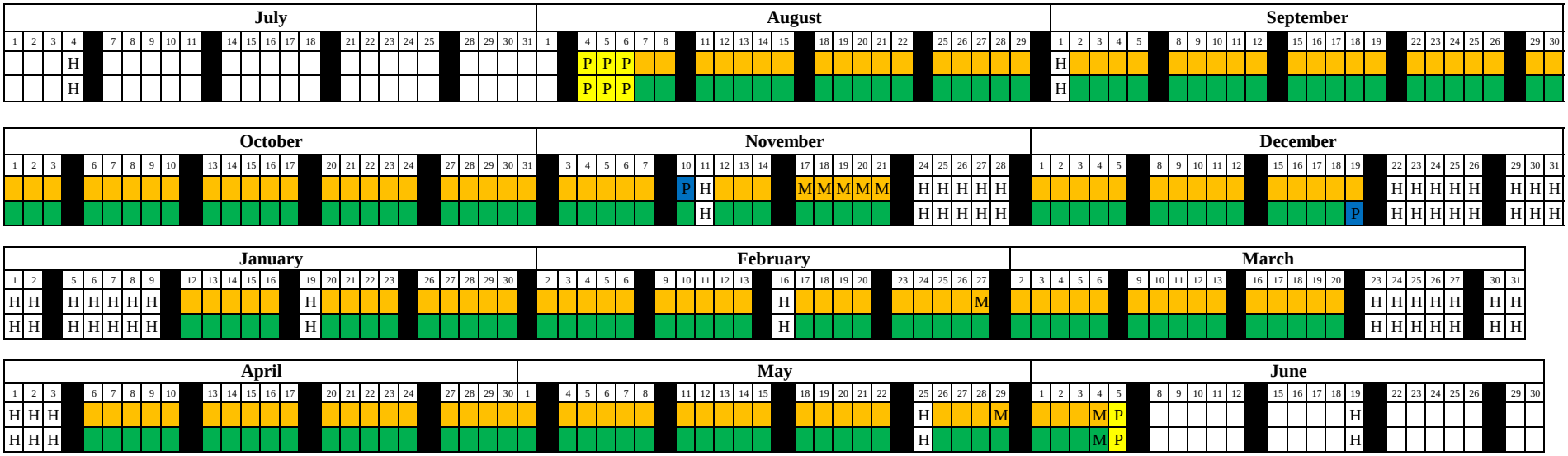


| Holidays (No Students in Attendance) | |
|---|---|
| Independence Day | July 4 |
| Labor Day | September 1 |
| Veteran's Day | November 11 |
| Thanksgiving Break | November 24 - 28 |
| Winter Break | December 22 - January 9 |
| Martin Luther King, Jr. Day | January 19 |
| Presidents' Day | February 16 |
| Spring Break | March 23 - April 3 |
| Memorial Day | May 25 |
| Juneteenth | June 19 |

| End of Quarter Dates | |
|---|---|
| Quarter 1 | October 3 (42 days) |
| Quarter 2 | December 18 (47 days) |
| Quarter 3 | March 20 (48 days) |
| Quarter 4 | June 4 (43 days) |

| End of Trimester Dates | |
|---|---|
| Trimester 1 | October 31 (61 days) |
| Trimester 2 | February 27 (61 days) |
| Trimester 3 | June 4 (58 days) |

| End of Semester Dates | |
|---|---|
| Semester 1 | December 19 (89 days) |
| Semester 2 | June 4 (91 days) |

| Attendance Days | |
|---|---|
| Students | 180 |
| Teachers | 185 |

Elementary
Secondary

**H** Holiday (No Students in Attendance)
**M** Minimum Day (Conferences/Report Card Preparation)
**P** Staff Professional Day (No Students in Attendance)

Board Approved: 04/22/25

# APPENDIX C

# STANDARD DRAWING

THIS PAGE INTENTIONALLY LEFT BLANK

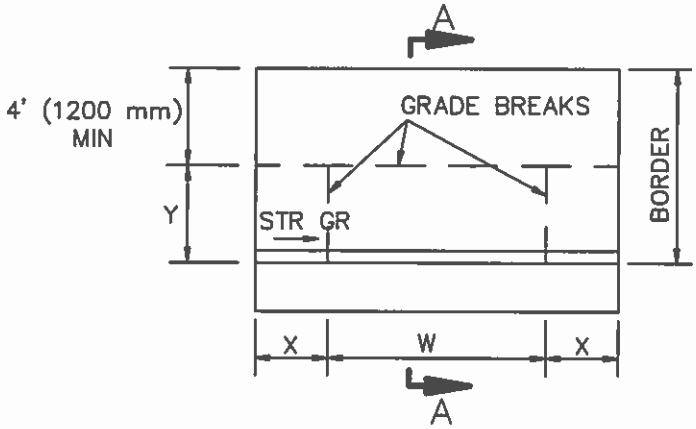


TYPE A

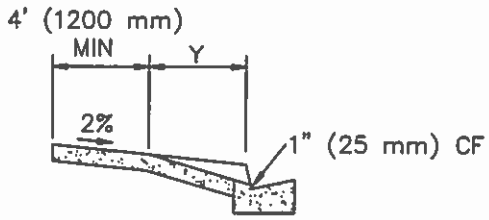


SECTION A–A

| CURB FACE, inches (mm) | X, inches (mm) | Y, inches (mm) |
|---|---|---|
| 6" (150) or less | 3'–0" (900) | 4'–0" (1200) |
| 7" (175) | 3'–6" (1050) | 4'–9" (1425) |
| 8" (200) | 4'–0" (1200) | 5'–8" (1700) |
| 9" (225) | 4'–6" (1350) | 6'–6" (1950) |
| 10" (250) | 5'–0" (1500) | 7'–3" (2175) |
| 11" (275) | 5'–6" (1650) | 8'–0" (2400) |
| 12" (300) or more | 6'–0" (1800) | 8'–9" (2625) |

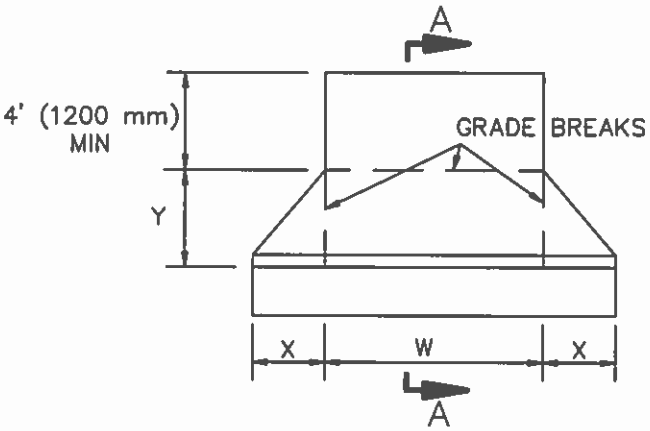


TYPE B

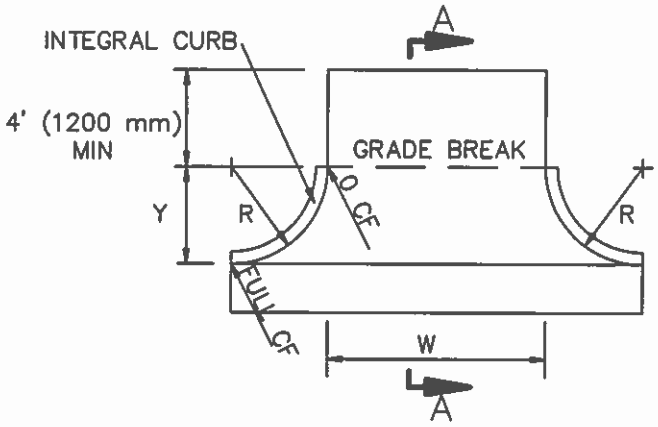


TYPE C

NOTES:

1. RESIDENTIAL DRIVEWAYS SHALL BE 4" (100 mm) THICK PCC.
2. COMMERCIAL DRIVEWAYS SHALL BE 6" (150 mm) THICK PCC.
3. WEAKENED PLANE JOINTS SHALL BE INSTALLED AT BOTH SIDES OF A DRIVEWAY AND AT 10' (3.0 m) INTERVALS.
4. CURB FOR TYPE C DRIVEWAY SHALL BE INTEGRAL AND MATCH ADJACENT CONSTRUCTION.
5. REFER TO LOCAL DEVELOPMENT REGULATIONS FOR AMERICANS WITH DISABILITIES ACCESS REQUIREMENTS AND MAXIMUM PERMITTED DRIVEWAY WIDTHS.
6. 560-3250-C CONCRETE TO BE USED.
7. 6-INCH THICK CLASS 2 AGGREGATE BASE SHALL BE PLACED AND COMPACTED TO 95% UNDER 6" THICK DRIVEWAY APPROACHES.

STANDARD PLANS FOR PUBLIC WORKS CONSTRUCTION

PROMULGATED BY THE PUBLIC WORKS STANDARDS INC. GREENBOOK COMMITTEE 1984 REV. 1996, 2009

# DRIVEWAY APPROACHES

USE WITH STANDARD SPECIFICATIONS FOR PUBLIC WORKS CONSTRUCTION

STANDARD PLAN

110–2

SHEET 1 OF 1

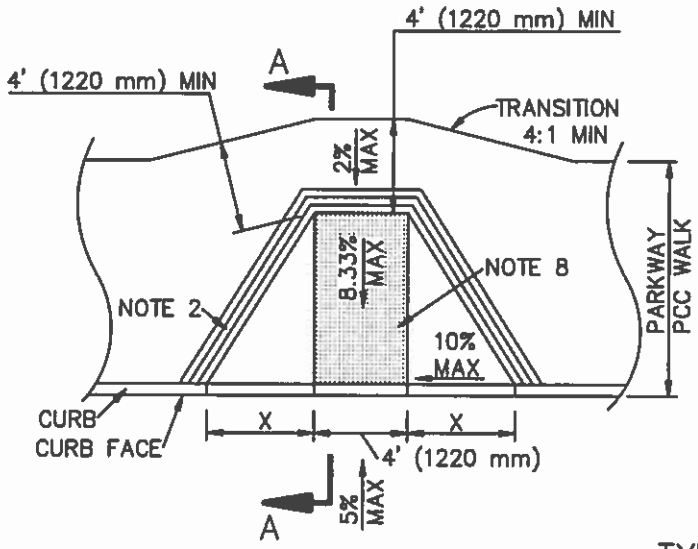


TYPE 1

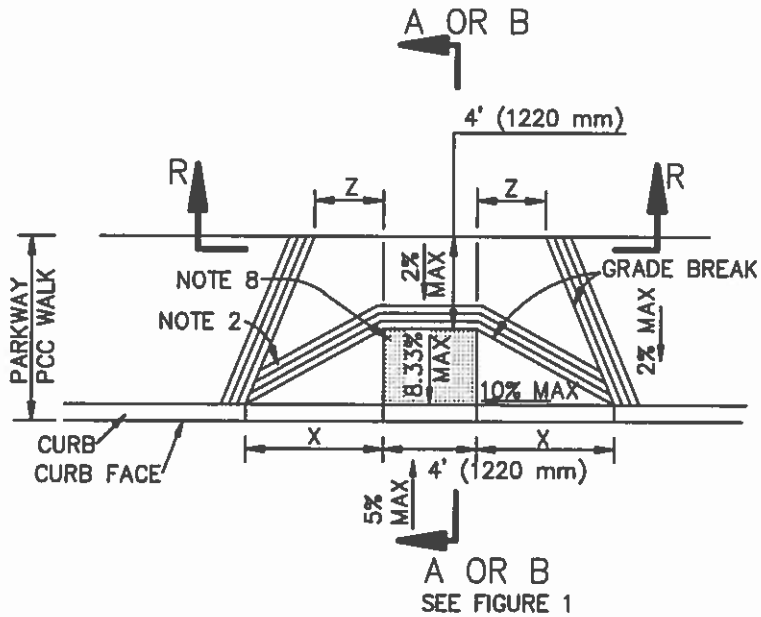


TYPE 2

CASE A

PARTS OF THIS STANDARD PLAN SHOW INSTALLATION FOR TYPICAL RETROFIT CONDITIONS, AND ARE NOT FULLY COMPLIANT WITH CALIFORNIA BUILDING CODE REQUIREMENTS FOR NEW DEVELOPMENT.

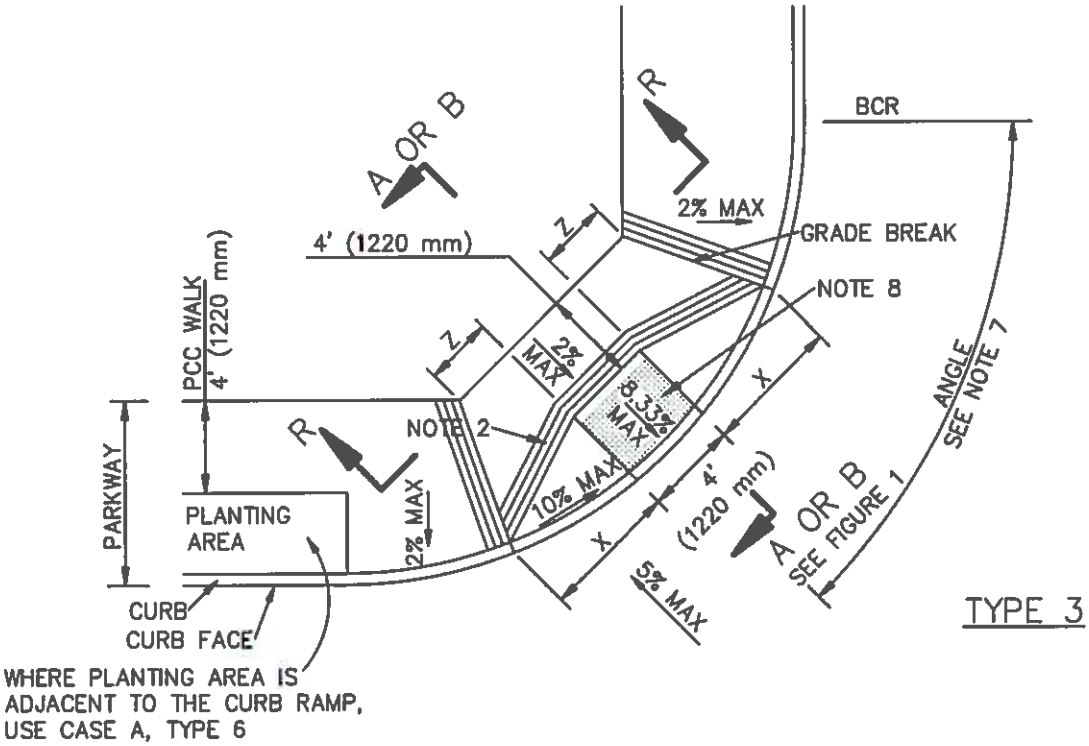


TYPE 3

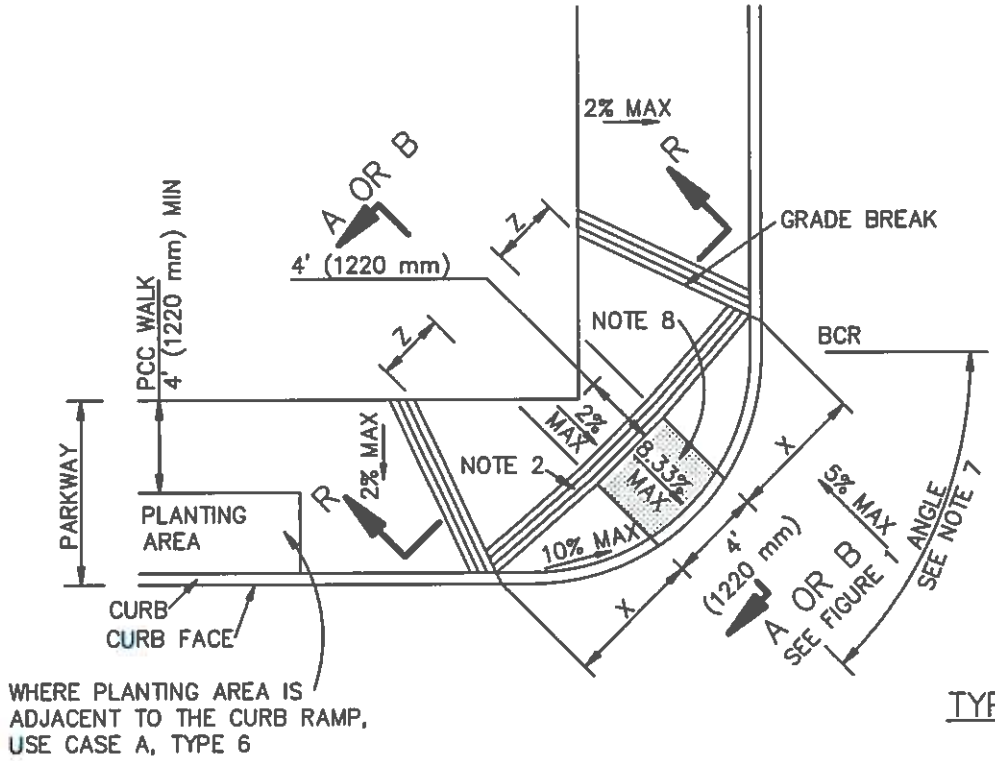


TYPE 4

CASE A

| STANDARD PLANS FOR PUBLIC WORKS CONSTRUCTION | STANDARD PLAN |
|---|---|
| **CURB RAMP** | **111–5** |
| | SHEET 2 OF 10 |

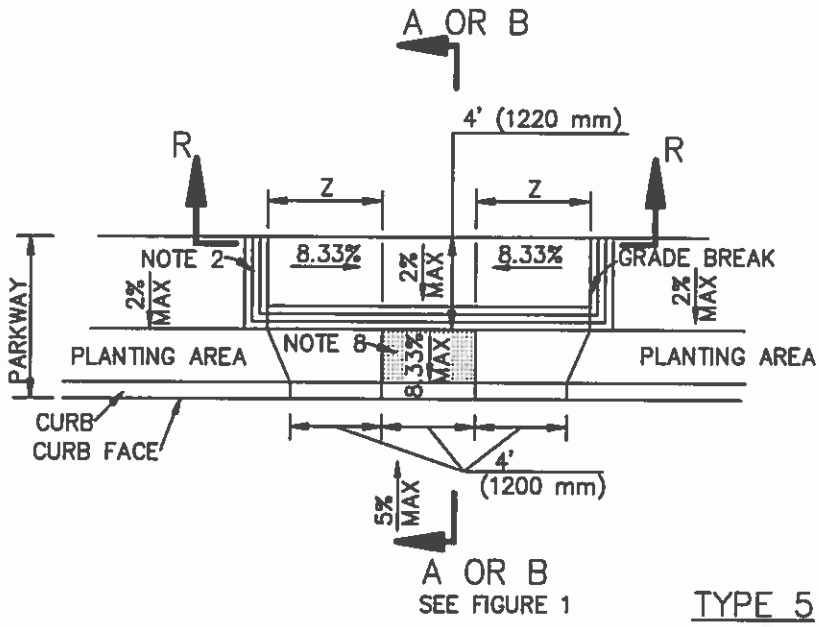


TYPE 5

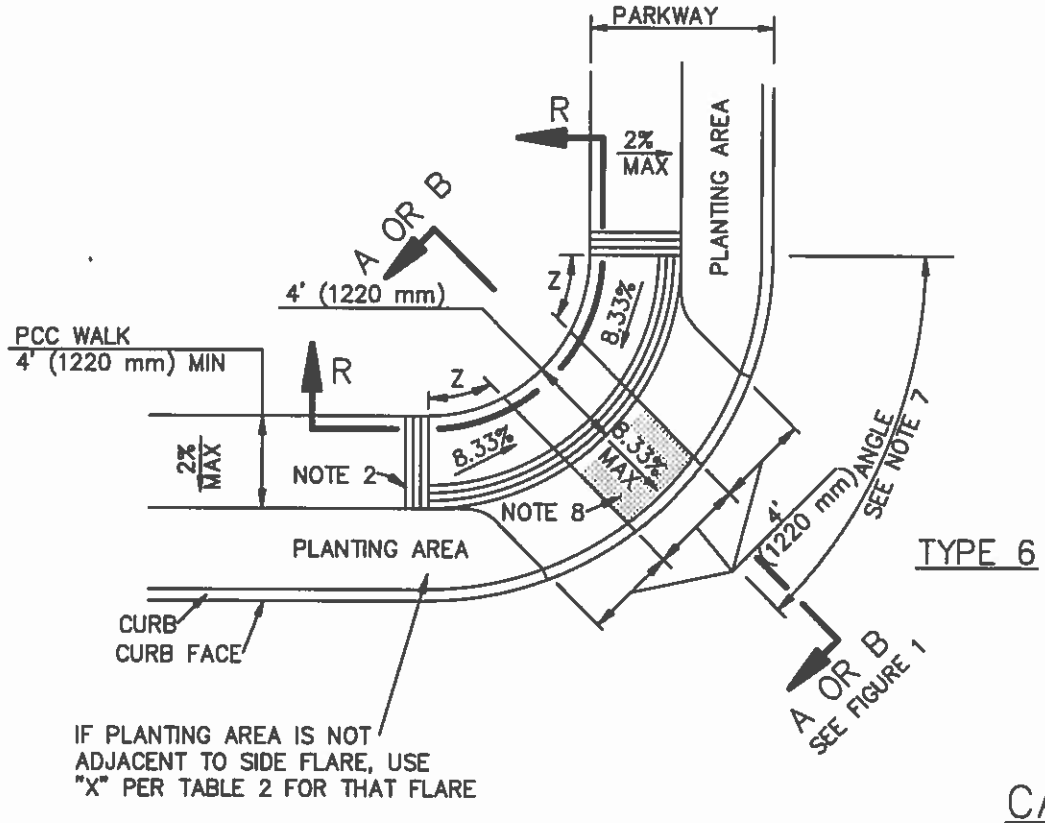


TYPE 6

CASE A

| STANDARD PLANS FOR PUBLIC WORKS CONSTRUCTION | STANDARD PLAN |
|---|---|
| **CURB RAMP** | **111–5** |
| | SHEET 3 OF 10 |

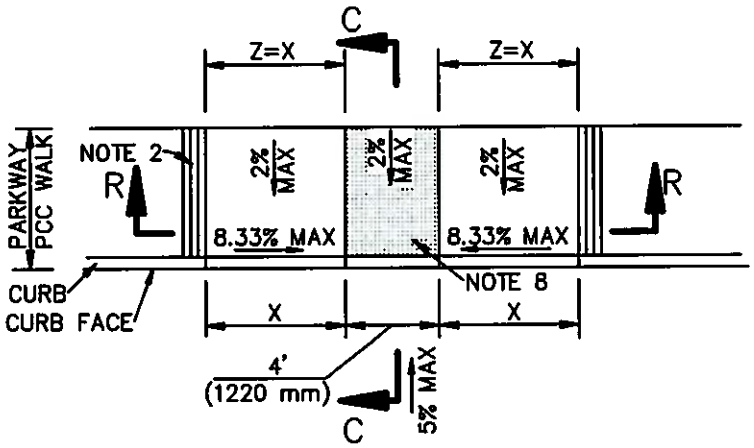


TYPE 1

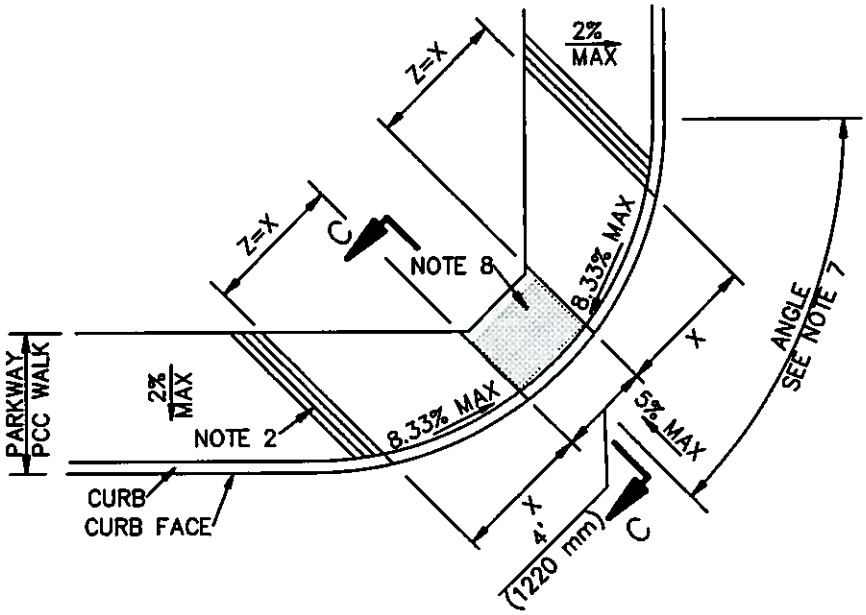


TYPE 2

CASE B

| STANDARD PLANS FOR PUBLIC WORKS CONSTRUCTION | STANDARD PLAN |
|---|---|
| **CURB RAMP** | **111–5** |
| | SHEET 4 OF 10 |

SKEW ANGLE a=45°
OFFSET b=0
UNLESS OTHERWISE
NOTED ON PLANS

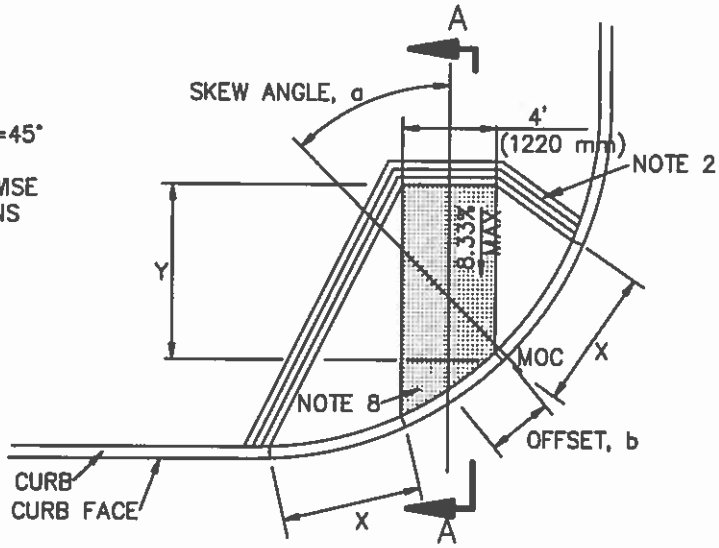


CASE C

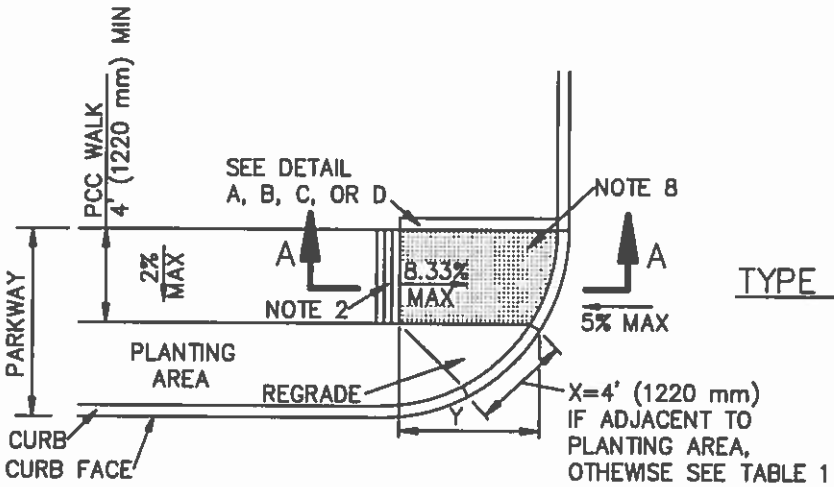


TYPE 1

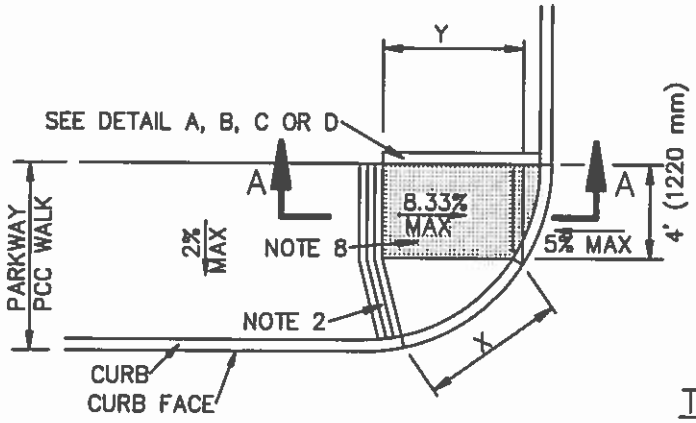


TYPE 2

CASE D

| STANDARD PLANS FOR PUBLIC WORKS CONSTRUCTION | STANDARD PLAN |
|---|---|
| **CURB RAMP** | **111–5** |
| | SHEET 5 OF 10 |

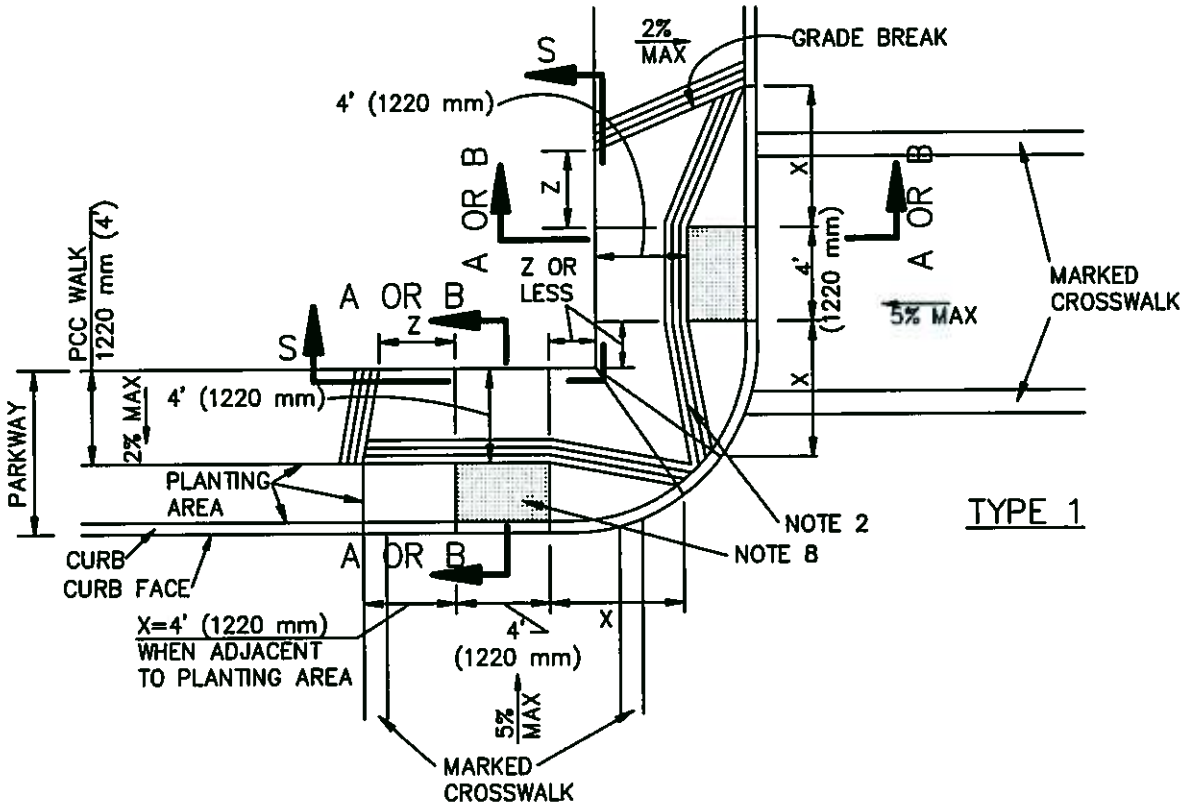


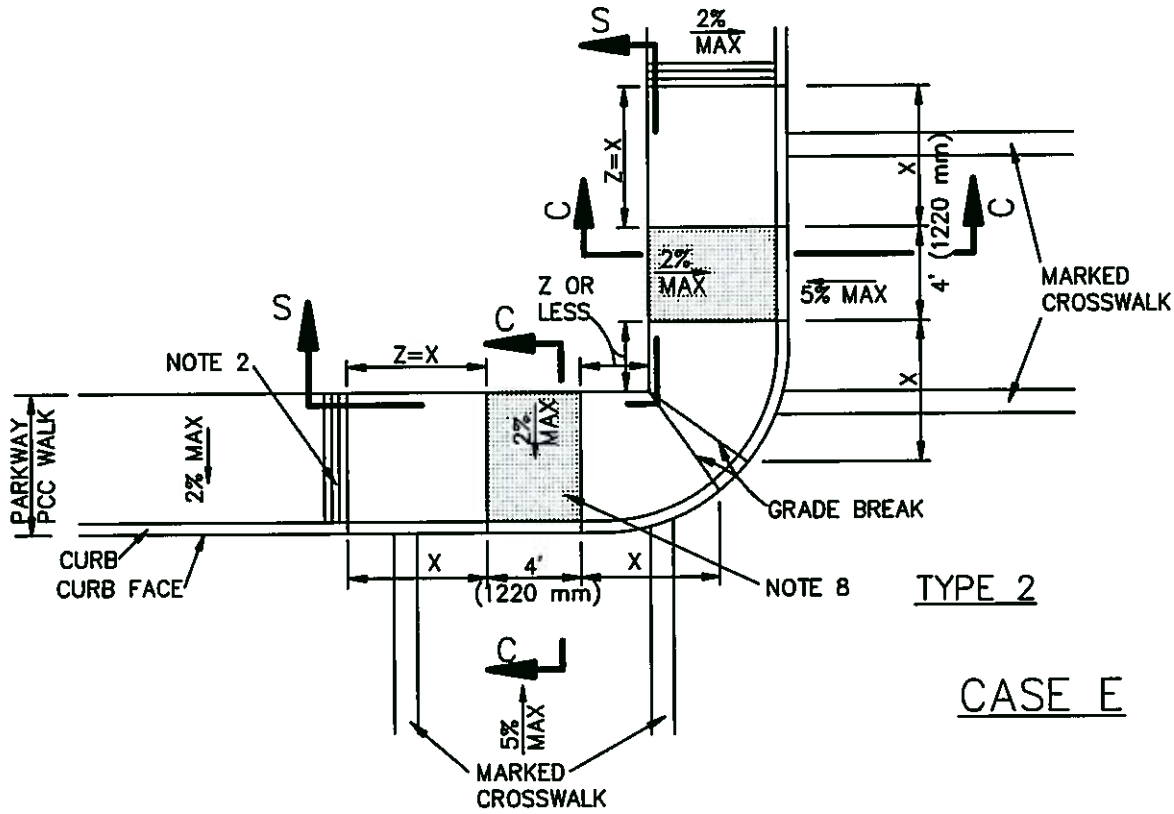


CASE E

| STANDARD PLANS FOR PUBLIC WORKS CONSTRUCTION | STANDARD PLAN |
|---|---|
| **CURB RAMP** | **111-5** |
| | SHEET 6 OF 10 |

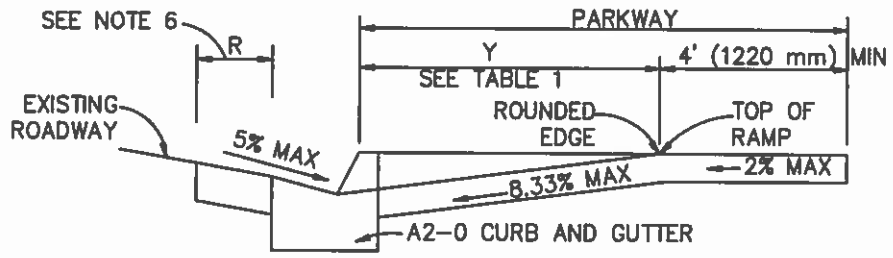


SECTION A-A

USE FIGURE 1 TO DETERMINE WHICH OF SECTIONS A-A, B-B OR C-C IS APPROPRIATE.

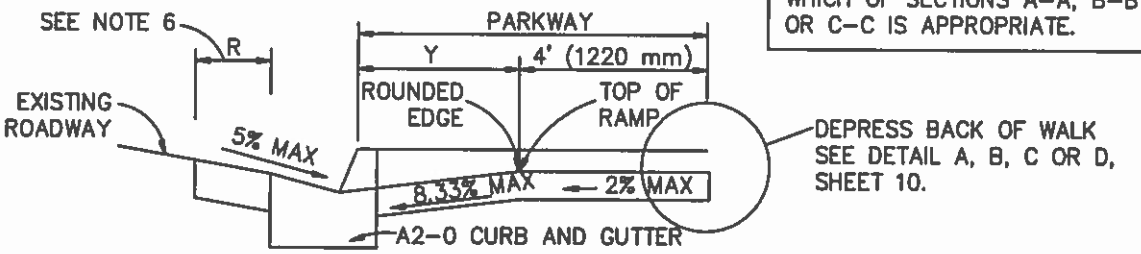


SECTION B-B

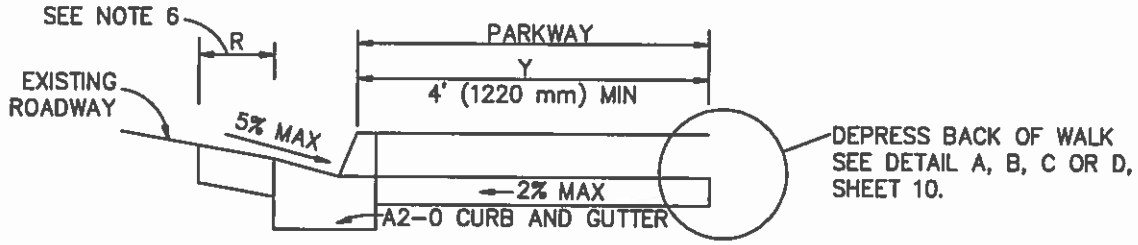


SECTION C-C

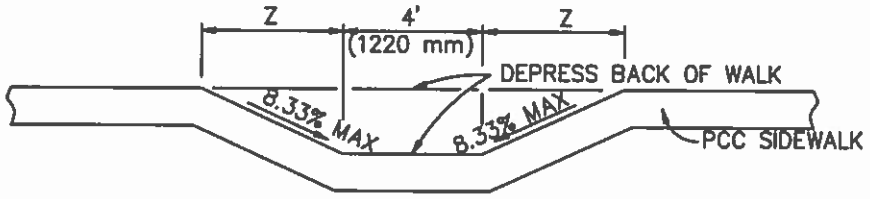


SECTION R-R

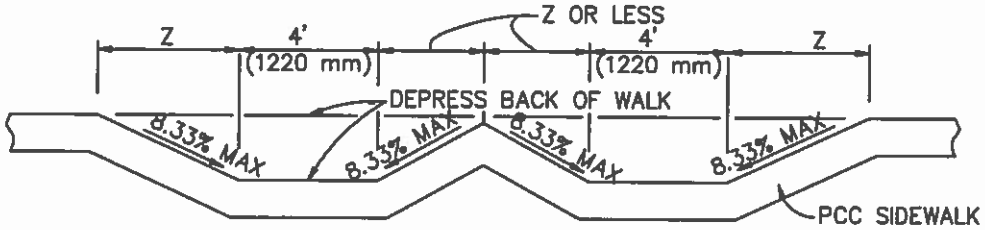


SECTION S-S

| STANDARD PLANS FOR PUBLIC WORKS CONSTRUCTION | STANDARD PLAN |
|---|---|
| **CURB RAMP** | **111-5** |
| | SHEET 7 OF 10 |

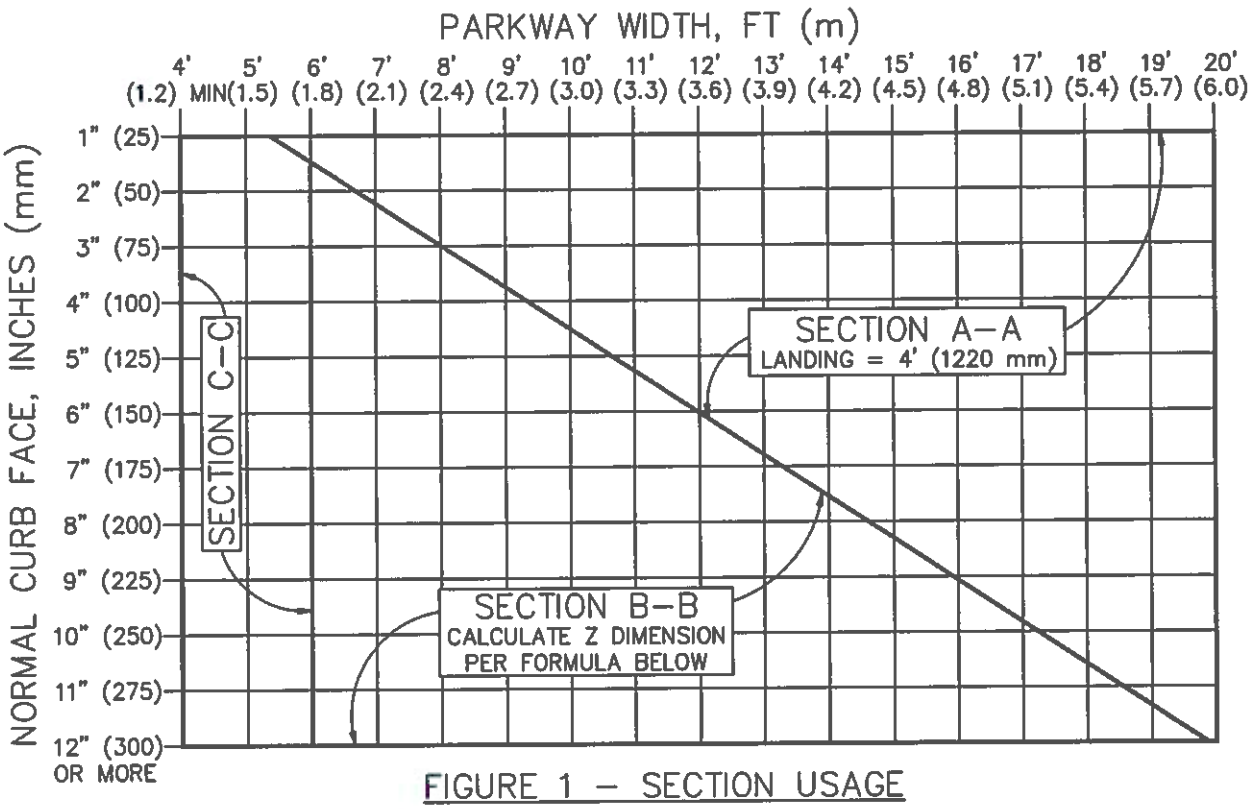


FIGURE 1 – SECTION USAGE

| NORMAL CURB FACE, INCHES (mm) | X, FT (mm) | SECTION Y–Y Y, FT (mm) |
|---|---|---|
| 2" (50) | 4.00' (1220) MIN | 2.63' (790) |
| 3" (75) | 4.00' (1220) MIN | 3.95' (1185) |
| 4" (100) | 4.00' (1220) MIN | 5.26' (1580) |
| 5" (125) | 4.17' (1275) | 6.58' (1975) |
| 6" (150) | 5.00' (1525) | 7.90' (2370) |
| 7" (175) | 5.83' (1775) | 9.21' (2765) |
| 8" (200) | 6.67' (2035) | 10.53' (3160) |
| 9" (225) | 7.50' (2285) | 11.84' (3555) |
| 10" (250) | 8.33' (2540) | 13.16' (3950) |
| 11" (275) | 9.17' (2795) | 14.47' (4340) |
| 12" (300) | 10.00' (3050) | 15.79' (4735) |

SEE SHEET 9 FOR STREET SLOPE ADJUSTMENT FACTORS, ALL STREETS

TABLE 1 – X AND Y VALUES

TABLE 1 REFERENCE FORMULAS:
X = CF / 8.333%
Y = CF / (8.333% – 2% WALK CROSS SLOPE)

WHERE FIGURE 1 SHOWS USE OF SECTION B–B, FIGURE Z DIMENSION AS FOLLOWS:

W = PARKWAY WIDTH
L = LANDING WIDTH, 4' (1220 mm) TYP
Z = [(Y+L)–W] x 0.760

IF (Y+L) < W, THEN Z = 0

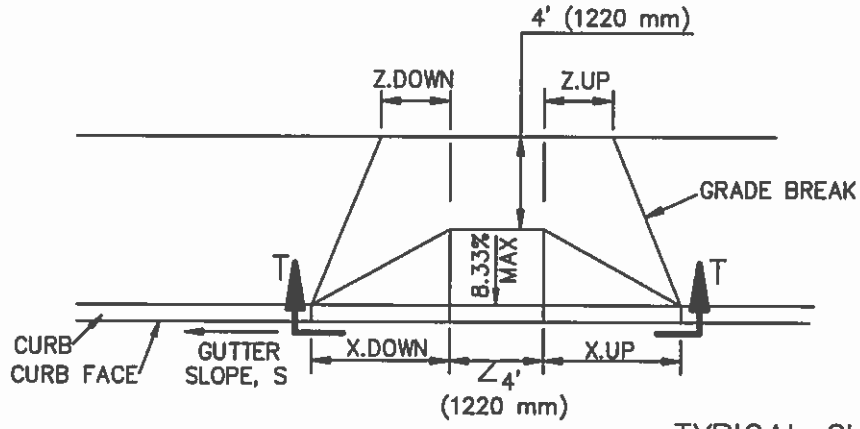


TYPICAL CURB RAMP

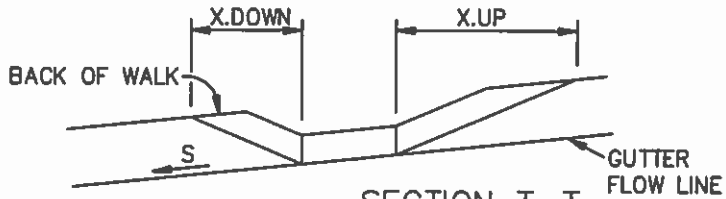


SECTION T–T
SLOPED STREET

FOR SLOPED STREETS, MULTIPLY THE DIMENSIONS PARALLEL TO THE STREET, X AND Z, UPSTREAM AND DOWNSTREAM OF THE RAMP, BY THE FACTORS IN THE FOLLOWING TABLE.

FOR EXAMPLE, X.DOWN = X x K.DOWN

| S | K.DOWN | K.UP |
|---|---|---|
| 0% | 1.000 | 1.000 |
| 0.2% | 0.977 | 1.025 |
| 0.5% | 0.943 | 1.064 |
| 1% | 0.893 | 1.136 |
| 2% | 0.806 | 1.316 |
| 3% | 0.735 | 1.563 |
| 4% | 0.676 | 1.923 |
| 5% | 0.625 | 2.500 |

TABLE 2 – SLOPE ADJUSTMENTS

TABLE 2 REFERENCE FORMULAS:
K.DOWN = 8.333% / (8.333% + S)
K.UP = 8.333% / (8.333% – S)

STREET SLOPE ADJUSTMENTS

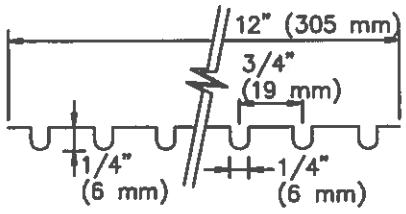


GROOVING DETAIL

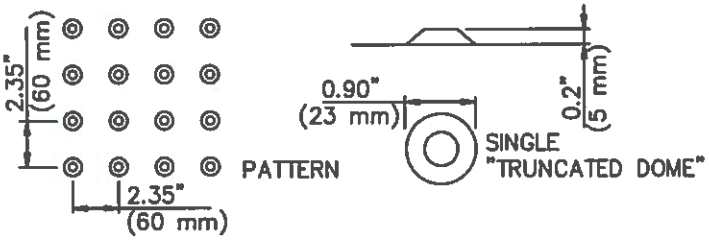


DETECTABLE WARNING DETAIL

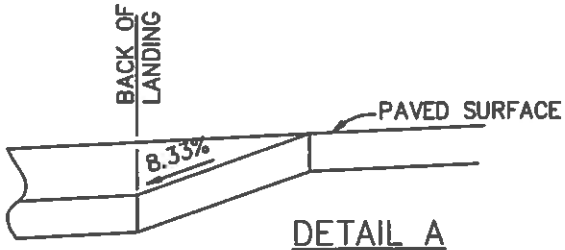


DETAIL A

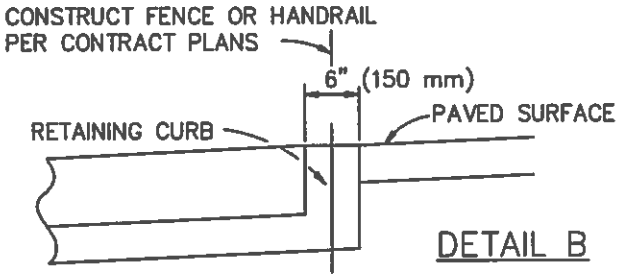


DETAIL B

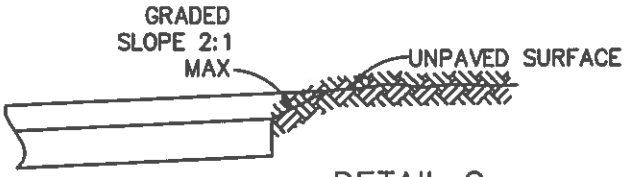


DETAIL C

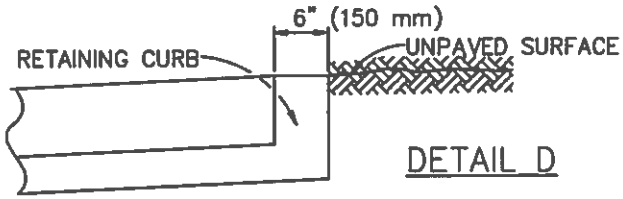


DETAIL D

## GENERAL NOTES:

1. CONCRETE SHALL BE CLASS ~~520-C-2500 (310-C-17)~~ 560-3250-C CONFORMING TO SSPWC 201-1.1.2 AND SHALL BE 4" (100 mm) THICK.
2. THE RAMP SHALL HAVE A 12" (305 mm) WIDE BORDER WITH 1/4" (6 mm) GROOVES APPROXIMATELY 3/4" (19 mm) OC. SEE GROOVING DETAIL.
3. THE RAMP SURFACE SHALL HAVE A TRANSVERSE BROOMED SURFACE TEXTURE CONFORMING TO SSPWC 303-1.9.
4. USE DETAIL "A" OR "B" IF EXISTING SURFACE BEHIND LANDING IS PAVED.
5. USE DETAIL "C" OR "D" IF EXISTING SURFACE BEHIND LANDING IS UNPAVED.
6. R = 3' (900 mm) UNLESS OTHERWISE SHOWN ON PLAN. SEE SHEET 7.
7. ANGLE = $\Delta/2$ UNLESS OTHERWISE SHOWN ON PLAN.
8. CONSTRUCT DETECTABLE WARNING SURFACE PER DETAIL THIS SHEET. MATERIALS SHALL BE PER CONTRACT DOCUMENTS.

| STANDARD PLANS FOR PUBLIC WORKS CONSTRUCTION | STANDARD PLAN |
|---|---|
| **CURB RAMP** | **111-5** |
| | SHEET 10 OF 10 |

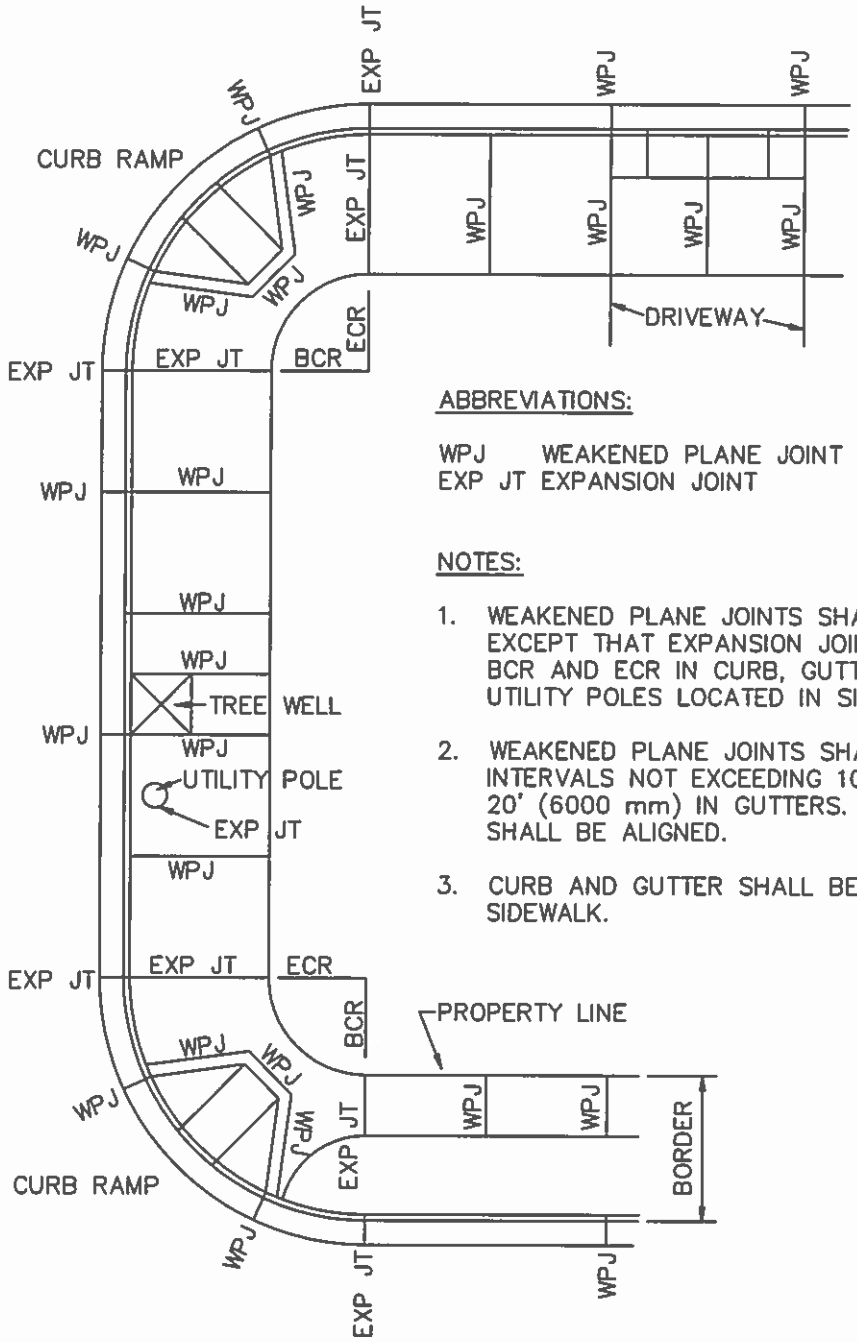


ABBREVIATIONS:

WPJ WEAKENED PLANE JOINT
EXP JT EXPANSION JOINT
BCR BEGINNING OF CURB RETURN
ECR END OF CURB RETURN

NOTES:

1. WEAKENED PLANE JOINTS SHALL BE USED FOR ALL JOINTS, EXCEPT THAT EXPANSION JOINTS SHALL BE PLACED AT THE BCR AND ECR IN CURB, GUTTER AND SIDEWALK, AND AROUND UTILITY POLES LOCATED IN SIDEWALK AREAS.
2. WEAKENED PLANE JOINTS SHALL BE CONSTRUCTED AT REGULAR INTERVALS NOT EXCEEDING 10' (3000 mm) IN WALKS AND 20' (6000 mm) IN GUTTERS. JOINTS IN CURB AND WALK SHALL BE ALIGNED.
3. CURB AND GUTTER SHALL BE CONSTRUCTED SEPARATELY FROM SIDEWALK.

STANDARD PLANS FOR PUBLIC WORKS CONSTRUCTION

PROMULGATED BY THE PUBLIC WORKS STANDARDS INC. GREENBOOK COMMITTEE 1984 REV. 1996, 2009

# CURB AND SIDEWALK JOINTS

USE WITH STANDARD SPECIFICATIONS FOR PUBLIC WORKS CONSTRUCTION

STANDARD PLAN 112-2

SHEET 1 OF 1

# WALK OR FILL-IN REPLACEMENT FOR EXCAVATIONS MADE PARALLEL TO CURB OR PROPERTY LINE

## WALK ADJACENT TO PROPERTY LINE

WALK LESS THAN 5' (1500 mm) WIDE

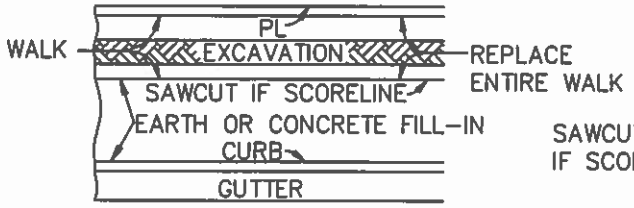


WALK 5' (1500 mm) WIDE OR MORE

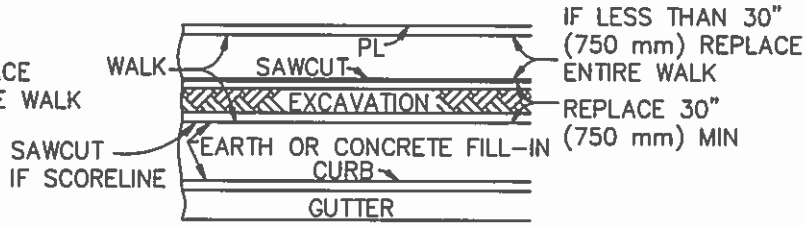


## WALK ADJACENT TO CURB

WALK LESS THAN 5' (1500 mm) WIDE

WALK 5' (1500 mm) WIDE OR MORE

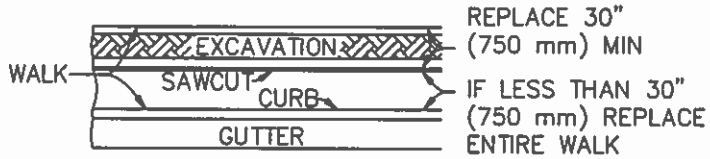


## FILL-IN REPLACEMENT

FILL-IN LESS THAN 5' (1500 mm) WIDE

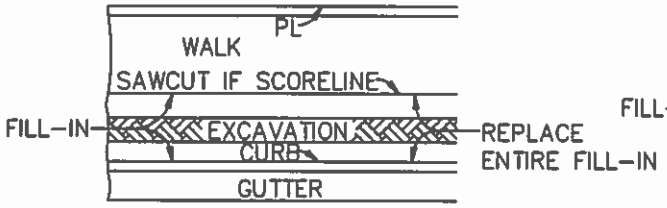


FILL-IN 5' (1500 mm) WIDE OR MORE

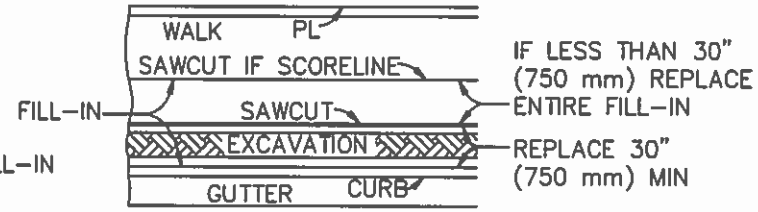


# WALK OR FILL-IN REPLACEMENT FOR EXCAVATIONS MADE NORMAL TO CURB OR PROPERTY LINE

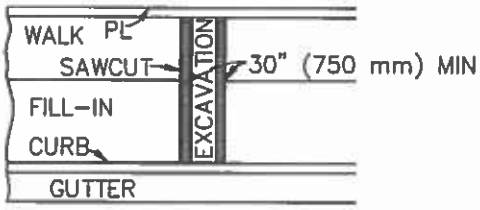


THESE REQUIREMENTS ALSO APPLY TO ENDS OF PARALLEL EXCAVATIONS.

IF AN EXCAVATION FALLS WITHIN 30" (750 mm) OF AN EXPANSION JOINT, CONSTRUCTION JOINT, WEAKENED PLANE JOINT, OR EDGE, THE CONCRETE SHALL BE REMOVED AND REPLACED TO THE JOINT OR EDGE.

IF AN EXCAVATION FALLS WITHIN 12" (300 mm) OF A SCORELINE, THE CONCRETE SHALL BE REMOVED AND REPLACED TO THE SCORELINE. THE SCORELINE SHALL BE SAWCUT BEFORE CONCRETE REMOVAL.

THE MINIMUM LENGTH OF REPLACEMENT IN BOTH CASES SHALL BE 30" (750 mm).

## NOTES

1. CONCRETE WALK, FILL-IN AND DRIVEWAYS REMOVED IN CONNECTION WITH CONSTRUCTION SHALL BE REPLACED TO NEATLY SAWED EDGES. ALL CUTS SHALL BE PARALLEL TO OR PERPENDICULAR TO THE CURB; ON CURVES, THE CUT SHALL BE RADIAL TO THE CURB.

2. DRIVEWAY APRONS IN WHICH THE "W" DISTANCE IS LESS THAN 11' (3300 mm) SHALL BE REPLACED IN THEIR ENTIRETY IF CUT IN ANY AREA.

3. DRIVEWAY APRONS IN WHICH THE "W" DISTANCE IS 11' (3300 mm') OR MORE MAY BE CUT WITHIN THE "W" SECTION. THE MINIMUM REPLACEMENT SHALL BE 30" (750 mm) IN LENGTH. THE MINIMUM DISTANCE ALLOWED BETWEEN SUCH CUTS SHALL BE 14' (4200 mm').

4. DRIVEWAY APRONS IN WHICH THE "W" DISTANCE IS 11' (3300 mm) OR MORE MAY BE CUT IN THE "X" OR "R" SECTION. REPLACEMENT SHALL BE THE ENTIRE "X" OR "R" SECTION.

5. DRIVEWAY APRONS SHALL BE REPLACED FROM THE BACK OF THE CURB TO THE FRONT EDGE OF THE WALK, EXCEPT, WHERE WALK IS ADJACENT TO CURB, REPLACEMENT SHALL BE FROM BACK OF CURB TO BACK OF WALK.

6. WALK PORTIONS OF DRIVEWAYS SHALL BE REPLACED AS SHOWN ABOVE FOR EXCAVATIONS MADE PARALLEL OR NORMAL TO CURB.

7. REPLACEMENT OF THE "X" OR "R" SECTION SHALL MATCH EXISTING CONSTRUCTION.

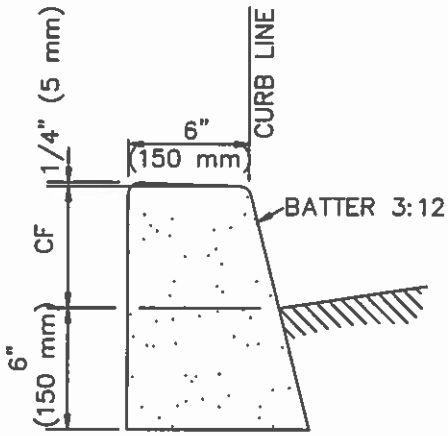


A1–6(150) AND A1–8(200)

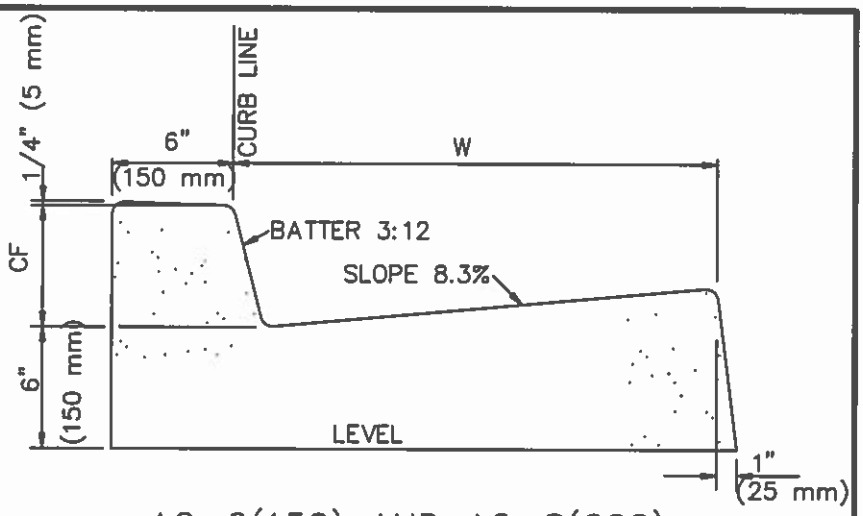


A2–6(150) AND A2–8(200)

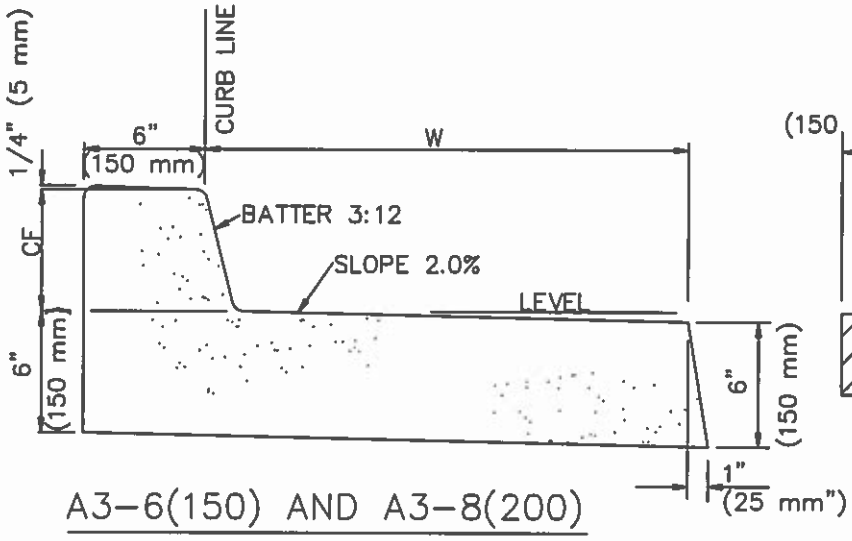


A3–6(150) AND A3–8(200)

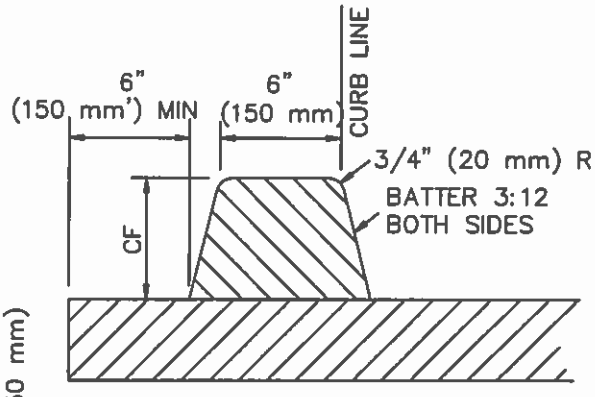


D1–6(150) AND D1–8(200)

NOTES:

1. THE LAST NUMBER IN THE DESIGNATION IS THE CURB FACE (CF) HEIGHT, INCHES (mm).
2. GUTTER WIDTH, W, IS 24" (600 mm) UNLESS OTHERWISE SPECIFIED.
3. TYPES A1, A2, A3 AND C1 SHALL BE CONSTRUCTED FROM PCC.
4. TYPE D1 CURB SHALL BE CONSTRUCTED FROM ASPHALT CONCRETE.
5. TYPE C1 CURB SHALL BE ANCHORED WITH STEEL DOWELS AS SHOWN OR WITH AN EPOXY APPROVED BY THE ENGINEER.
6. ALL EXPOSED CORNERS ON PCC CURBS AND GUTTERS SHALL BE ROUNDED WITH A 1/2" (15 mm) RADIUS.

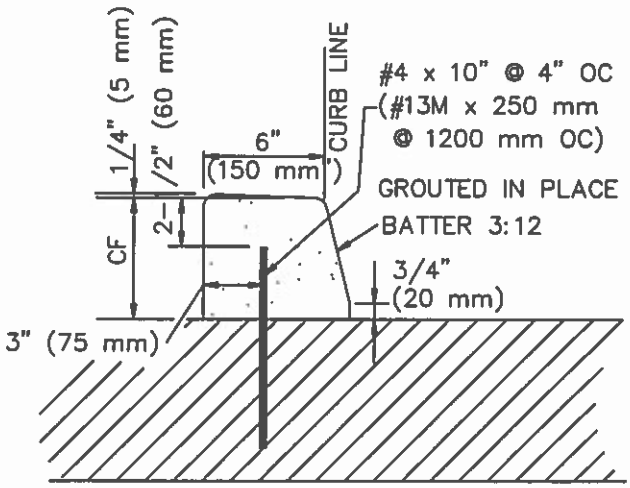


C1–6(150) AND C1–8(200)

STANDARD PLAN FOR PUBLIC WORKS CONSTRUCTION

PROMULGATED BY THE PUBLIC WORKS STANDARDS INC. GREENBOOK COMMITTEE 1984 REV. 1996, 2009

# CURB AND GUTTER – BARRIER

USE WITH STANDARD SPECIFICATIONS FOR PUBLIC WORKS CONSTRUCTION

STANDARD PLAN 120–2

SHEET 1 OF 1

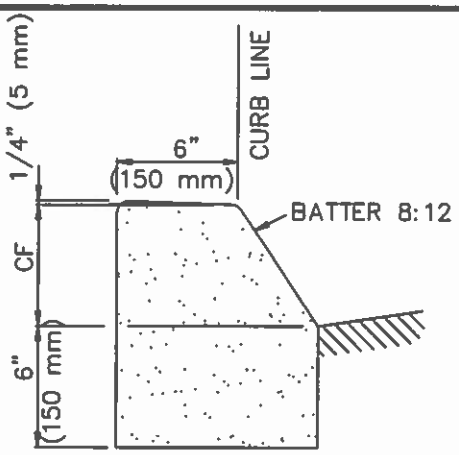


B1–6(150)

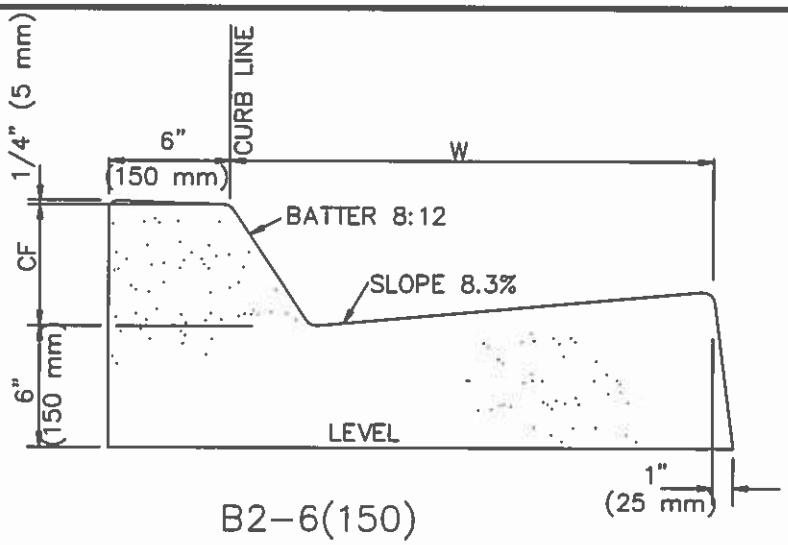


B2–6(150)

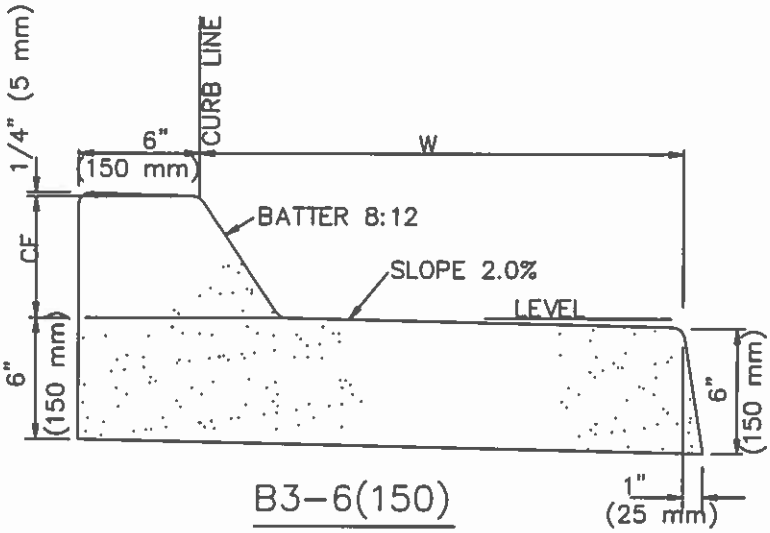


B3–6(150)

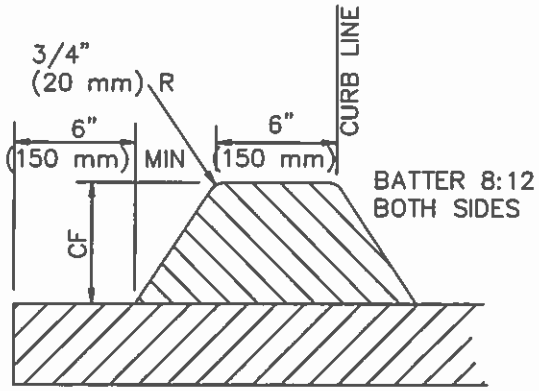


D2–6(150)

NOTES:

1. THE LAST NUMBER IN THE DESIGNATION IS THE CURB FACE (CF) HEIGHT, INCHES (mm).
2. GUTTER WIDTH, W, IS 24" (600 mm) UNLESS OTHERWISE SPECIFIED.
3. TYPES B1, B2, B3 AND C2 SHALL BE CONSTRUCTED FROM PCC.
4. TYPE D2 CURB SHALL BE CONSTRUCTED FROM ASPHALT CONCRETE.
5. TYPE C2 CURB SHALL BE ANCHORED WITH STEEL DOWELS AS SHOWN OR WITH AN EPOXY APPROVED BY THE ENGINEER.
6. ALL EXPOSED CORNERS ON PCC CURBS AND GUTTERS SHALL BE ROUNDED WITH A 1/2" (15 mm) RADIUS.

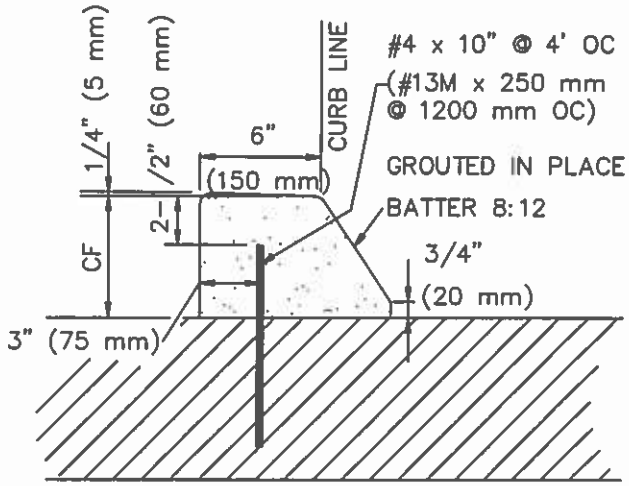


C2–6(150)

STANDARD PLANS FOR PUBLIC WORKS CONSTRUCTION

PROMULGATED BY THE PUBLIC WORKS STANDARDS INC. GREENBOOK COMMITTEE 1984 REV. 1996, 2009

# CURB AND GUTTER–MOUNTABLE

USE WITH STANDARD SPECIFICATIONS FOR PUBLIC WORKS CONSTRUCTION

STANDARD PLAN 121–2

SHEET 1 OF 1

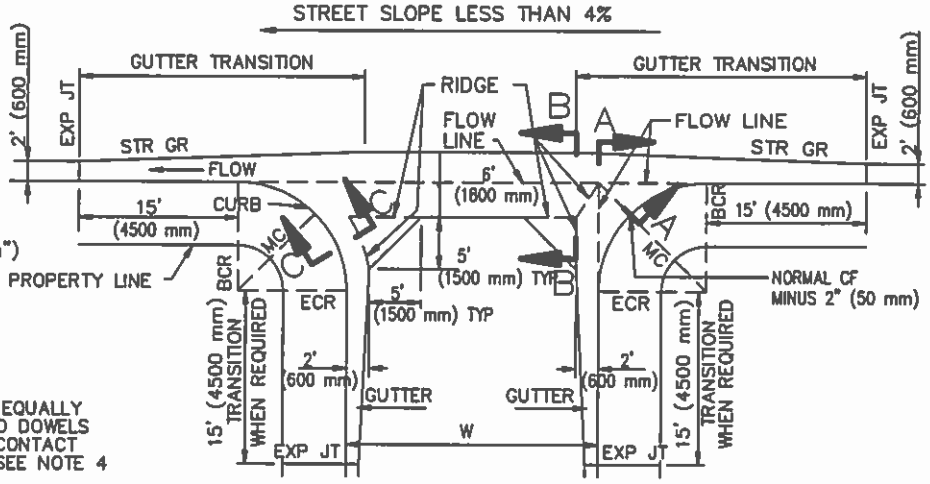


TYPICAL CROSS GUTTER PLAN
STREET SLOPE LESS THAN 4%

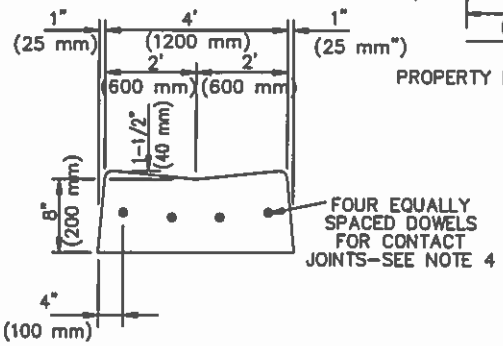


LONGITUDINAL GUTTER

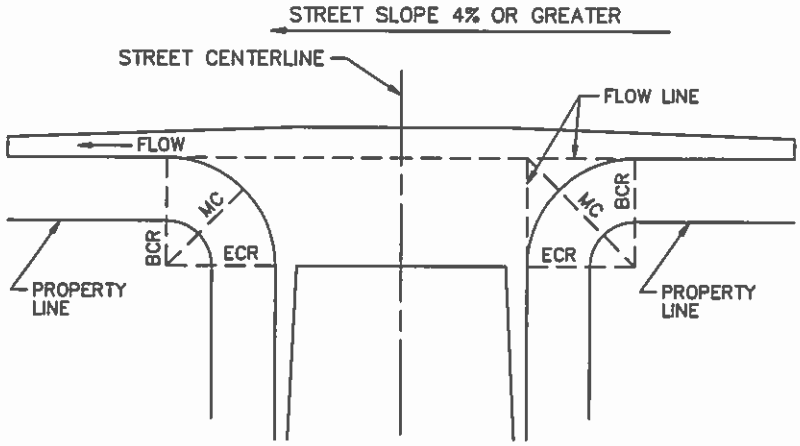


TYPICAL CROSS GUTTER PLAN
STREET SLOPE MORE THAN 4%

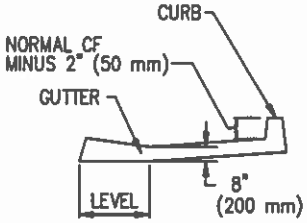


SECTION A–A

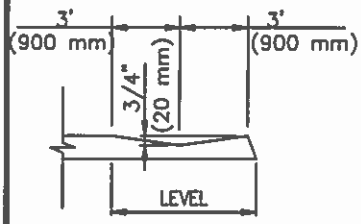


SECTION B–B

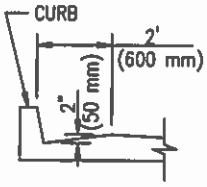


SECTION C–C

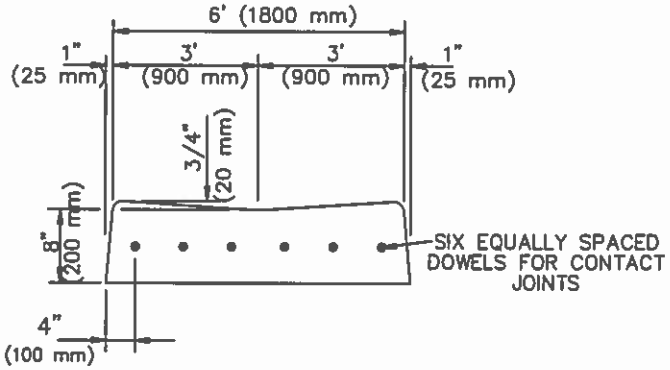


SECTION D–D

STANDARD PLANS FOR PUBLIC WORKS CONSTRUCTION

PROMULGATED BY THE PUBLIC WORKS STANDARDS INC. GREENBOOK COMMITTEE 1984 REV. 1996, 2009

# CROSS AND LONGITUDINAL GUTTERS

USE WITH STANDARD SPECIFICATIONS FOR PUBLIC WORKS CONSTRUCTION

STANDARD PLAN 122–2

SHEET 1 OF 2

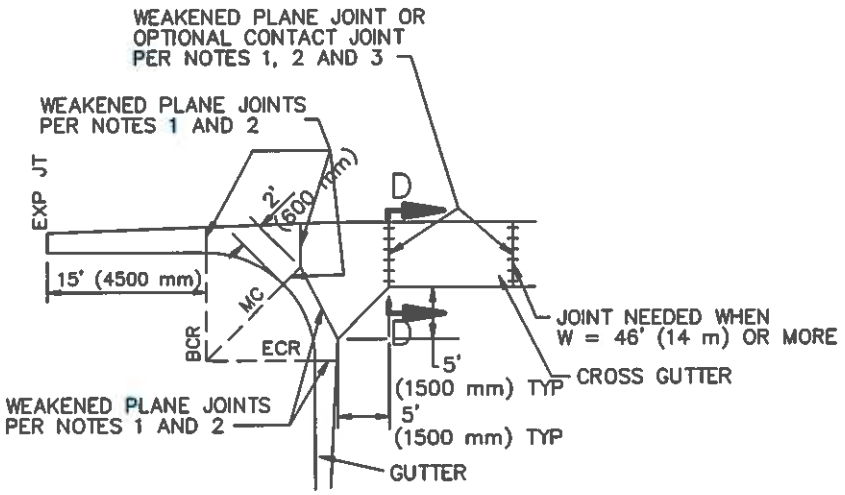


TYPICAL JOINT PLAN

NOTES:

1. WEAKENED PLANE AND/OR CONTACT JOINTS SHALL BE PLACED IN CURB AND GUTTER AT LOCATIONS SHOWN ON THE TYPICAL JOINT PLAN HEREON.
2. WEAKENED PLANE JOINTS SHALL BE PLASTIC CONTROL JOINTS OR 1–1/2" (40 mm) DEEP SAW CUTS. CONCRETE SAWING SHALL TAKE PLACE WITHIN 24 HOURS AFTER CONCRETE IS PLACED.
3. DOWELS FOR CONTACT JOINTS SHALL BE #4 BARS 18" LONG (#13M BARS 450 mm LONG).
4. PLACE A WEAKENED PLANE OR CONTACT JOINT WHERE LONGITUDINAL ALLEY GUTTER JOINS CONCRETE ALLEY INTERSECTION.
5. ALL EXPOSED CORNERS ON PCC GUTTERS SHALL BE ROUNDED WITH 1/2" (15 mm) RADIUS.
6. CONCRETE SHALL BE INTEGRAL WITH CURB UNLESS OTHERWISE SPECIFIED.
7. 6-INCH THICK CLASS 2 AGGREGATE BASE SHALL BE PLACED AND COMPACTED TO 95% RELATIVE COMPACTION UNDER 8" THICK CROSS GUTTER AND SPANDRELS.

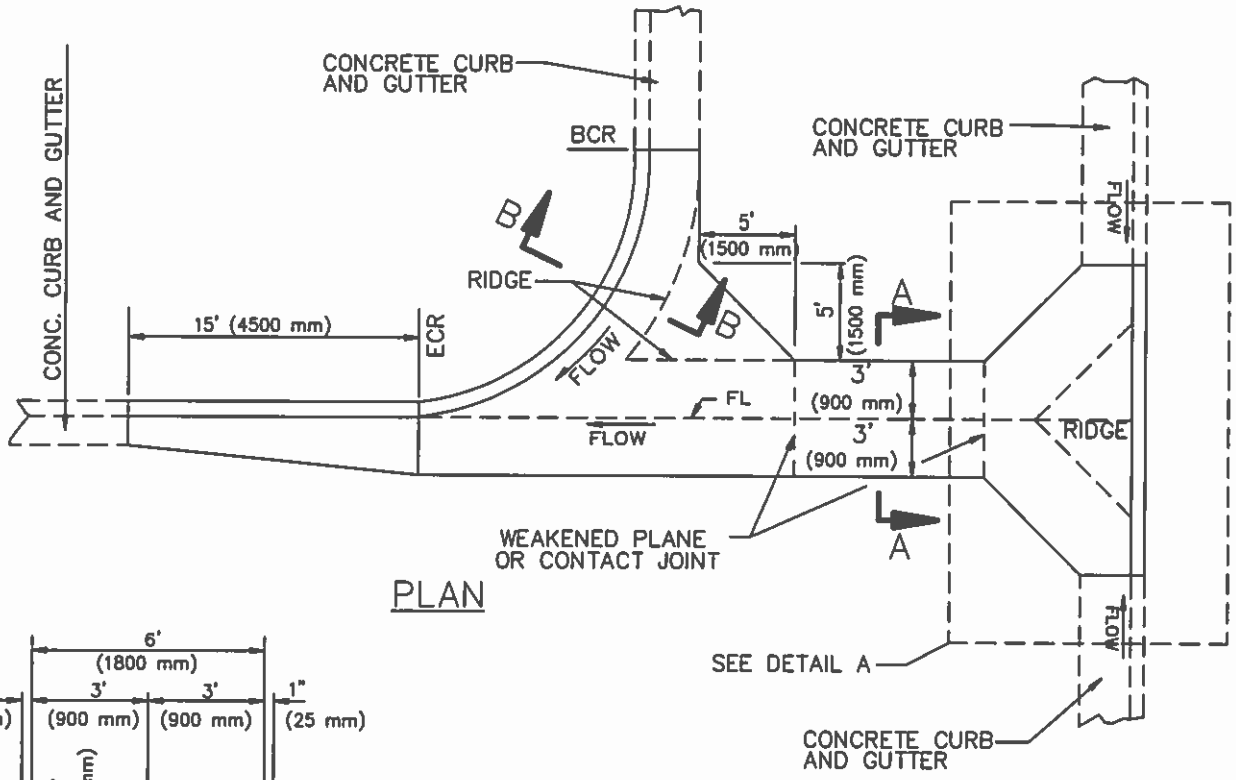


PLAN

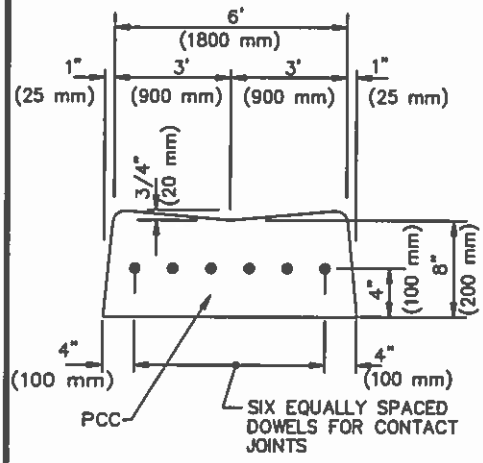


SECTION A–A

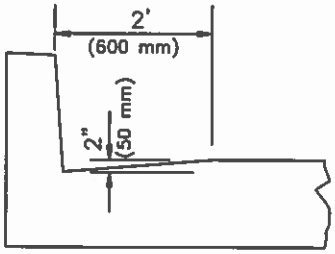


SECTION B–B

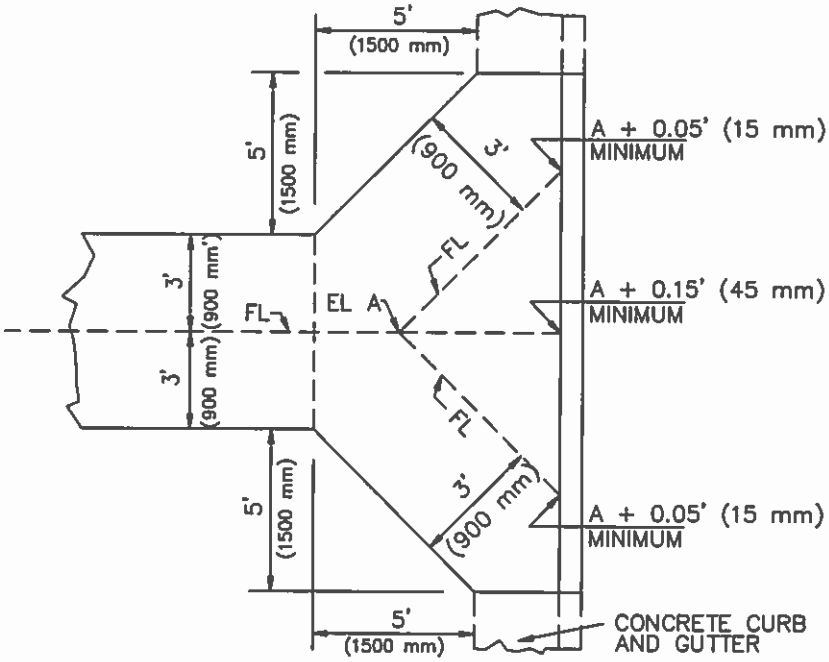


DETAIL A

STANDARD PLANS FOR PUBLIC WORKS CONSTRUCTION

PROMULGATED BY THE PUBLIC WORKS STANDARDS INC. GREENBOOK COMMITTEE 1993 REV. 1998, 2009

# CROSS GUTTER AT T INTERSECTIONS

USE WITH STANDARD SPECIFICATIONS FOR PUBLIC WORKS CONSTRUCTION

STANDARD PLAN 123–2

SHEET 1 OF 2

NOTES:

1. WEAKENED PLANE JOINTS SHALL BE PLASTIC CONTROL JOINTS OR 1–1/2" (35 mm) DEEP SAW CUTS. CONCRETE SAWING SHALL TAKE PLACE WITHIN 24 HOURS AFTER CONCRETE IS PLACED.

2. DOWELS FOR CONTACT JOINTS SHALL BE #4 BARS 18" LONG (#13M BARS 450 mm LONG).

3. ALL EXPOSED CORNERS SHALL BE ROUNDED WITH 1/2" (15 mm) RADIUS.

4. CONCRETE SHALL BE INTEGRAL WITH CURB UNLESS OTHERWISE SPECIFIED.

5. 6-INCH THICK CLASS 2 AGGREGATE BASE SHALL BE PLACED AND COMPACTED TO 95% RELATIVE COMPACTION UNDER 8" THICK CROSS GUTTER AND SPANDRELS.

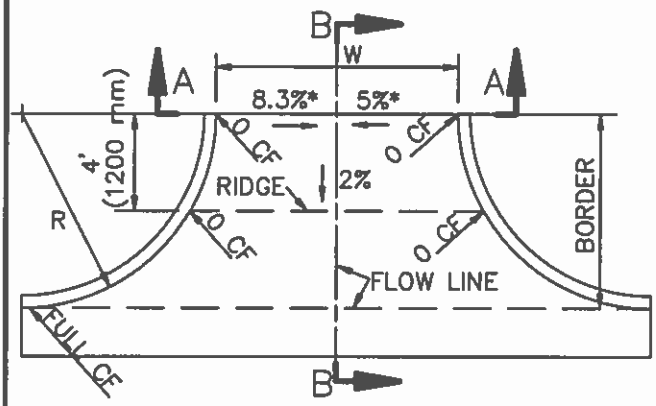


STANDARD APPROACH

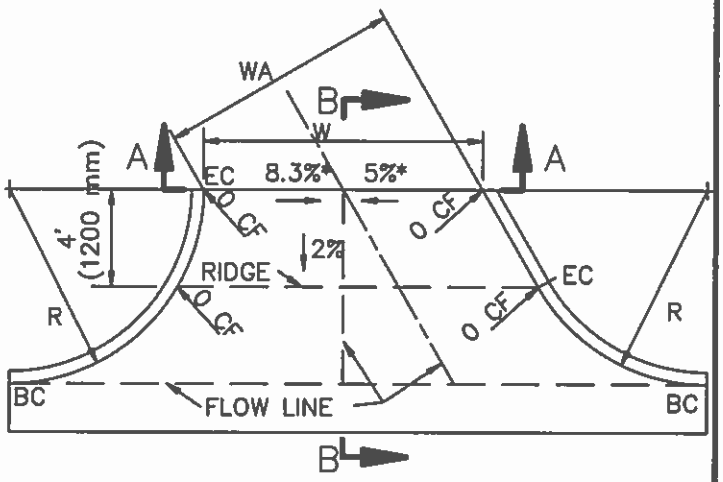


ANGLED APPROACH

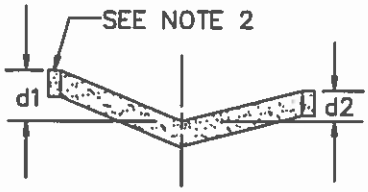


SECTION A–A

SECTION B–B

| W, ft<br>W, mm | 8'<br>(2400mm) | 10'<br>(3000mm) | 15'<br>(4500mm) | 20'<br>(6000mm) | 25'<br>(7500mm) | 30'<br>(9000mm) |
|---|---|---|---|---|---|---|
| d1, ft<br>MAX | 0.33'<br>(100 mm) | 0.42'<br>(125 mm) | 0.63'<br>(188 mm) | 0.83'<br>(250 mm) | 1.04'<br>(313 mm) | 1.25'<br>(375 mm) |
| d2, ft<br>MIN | 0.17'<br>(50 mm) | 0.25'<br>(75 mm) | 0.25'<br>(75 mm) | 0.25'<br>(75 mm) | 0.25'<br>(75 mm) | 0.25'<br>(75 mm) |

NOTES:

1. FOR CASE A, THE RADIUS OF THE CURB RETURN, R, IS EQUAL TO THE PARKWAY WIDTH.
2. ALLEY INTERSECTION SHALL BE PCC, CLASS 520–C–2500 (310–C–17), 6" (150 mm) THICK. CURB SHALL BE INTERGRAL TYPE "A".
3. ASTERISKS, *, SHOW MAXIMUM GRADES.

STANDARD PLANS FOR PUBLIC WORKS CONSTRUCTION

PROMULGATED BY THE PUBLIC WORKS STANDARDS INC. GREENBOOK COMMITTEE 1984 REV. 1996, 2009

# ALLEY INTERSECTION

USE WITH STANDARD SPECIFICATIONS FOR PUBLIC WORKS CONSTRUCTION

STANDARD PLAN 130–2

SHEET 1 OF 1

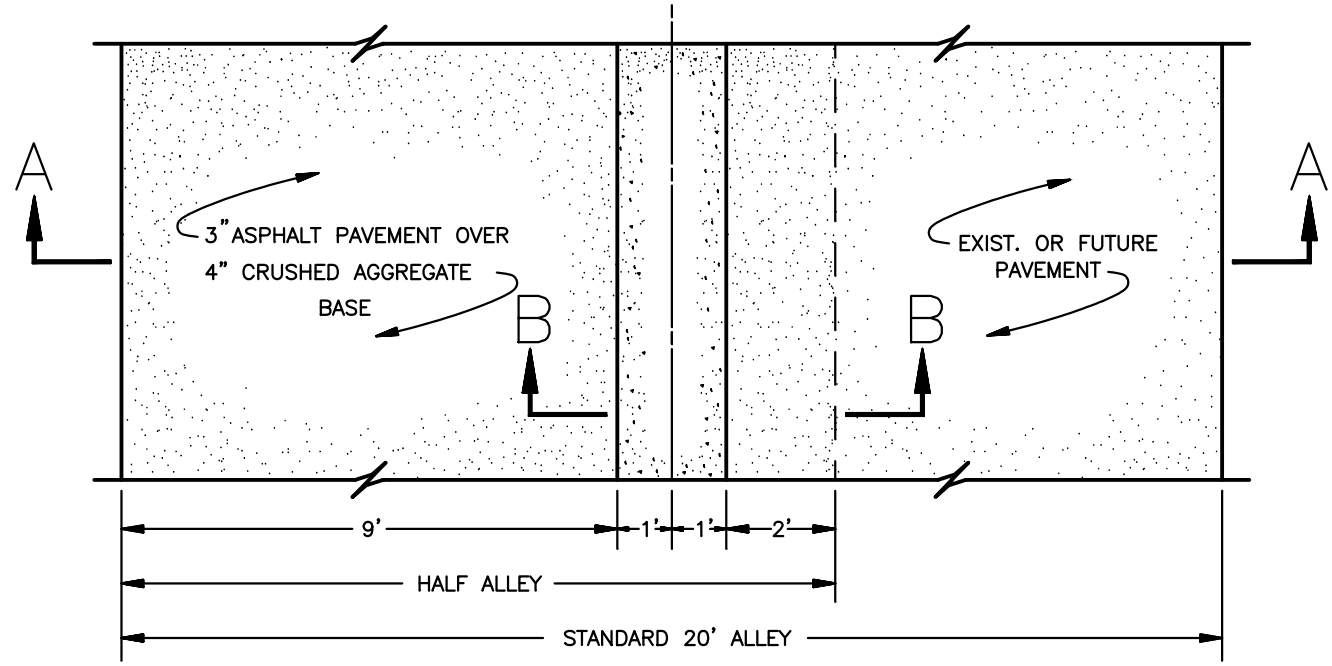


PLAN VIEW

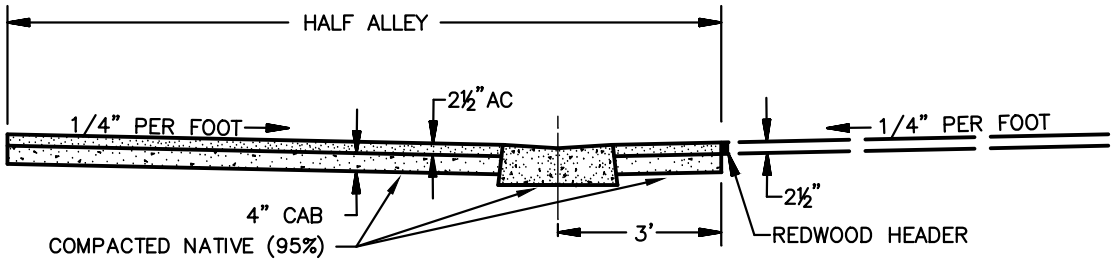


SECTION A–A

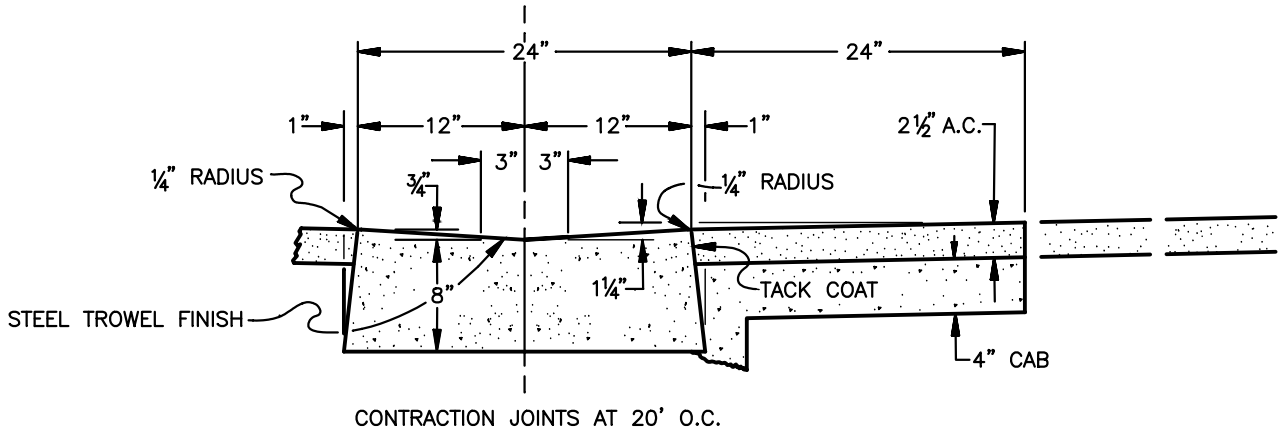


SECTION B–B

CITY OF REDLANDS MUNICIPAL UTILITIES AND ENGINEERING DEPARTMENT

| REV. | BY | DATE |
|---|---|---|
| | | |
| | | |
| | | |
| | | |

# STANDARD ALLEY SECTION

APPROVED: Goutam K. Dobey, City Engineer RCE 75646

DATE: 01/03/2023

STD. DWG. NUMBER

**118-0**

SHEET 1 OF 1

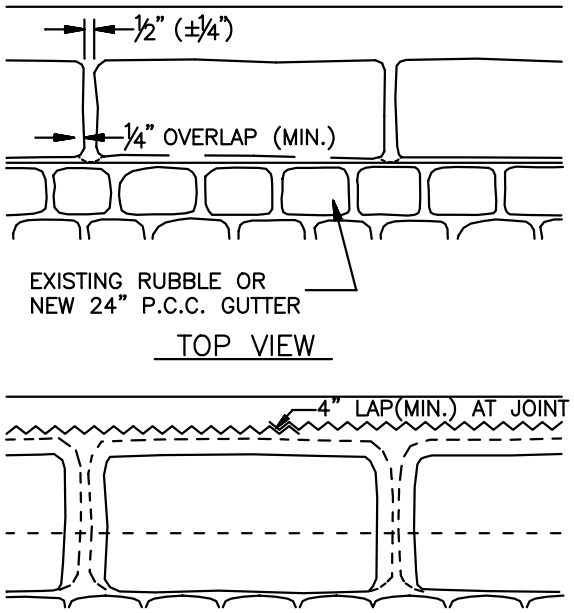


FRONT VIEW

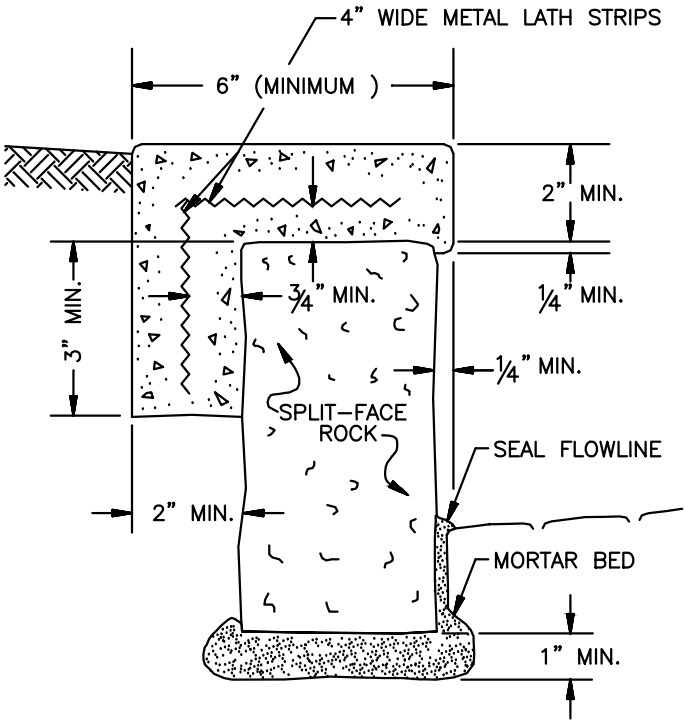


CROSS SECTION OF ROCK CURB

## SPECIFICATIONS

1. Description – This work shall consist of placing split–faced rock in cement mortar beds and placing of mortar caps at locations as shown on the plans or as directed by the Engineer and as specified in these specifications and the special provisions.
2. Rock – Rock for use in split–face rock curbs shall be existing split–face rock or new rock as may be required. Rock shall be clean, hard, durable and free from seams and other imperfections. Rock shall be of uniform shape and size. Any new rock used shall be approved by the Engineer prior to use.
3. Mortar – Mortar for bedding and finishing of split–face rock curb shall be class "C" mortar consisting of one part by volume of portland cement to two parts by volume of clean, fine aggregate. Hydrated lime, to the extent of 10% by volume of the cement may be added to the mortar. Hydrated lime shall be treated as an addition and not as replacing any cement. Mortar may be mixed in either a mixing machine or by hand. If mixed by hand, the fine aggregate, cement and lime shall be mixed dry until the mixture assumes uniform color. Water shall then be added at sufficient quantities to produce a mixture workable for the intended use. Mortar shall be used within one hour after water has been added and shall not be retempered.
4. Placing – Rocks shall be thoroughly wetted before placing and shall be laid in full mortar beds in courses approximately horizontal and vertical in both longitudinal and transverse directions as herein defined. Rocks will not be considered to be properly bedded until mortar exudes from the underside of the bedded rock. Mortar caps shall contain 4 inch wide "Strip–Ex" steel lath and shall be placed to the dimensions shown above. Grades for the top of the cap shall comply as follows: When a 10 foot straight edge is placed on top of the finished cap, the surface shall not vary from the edge of the straight edge more than 1/8 inch, except at changes in grade. Grades and changes in grade shall conform to the City of Redlands Standard Specifications. The alignment of the curb shall be set at a uniform perpendicular distance from the centerline of the street as shown on the plans or as defined by the Engineer. No voids in any part of the curb shall be permitted. Dimensions and tolerances for placing of rock shall be as shown above.

CITY OF REDLANDS MUNICIPAL UTILITIES AND ENGINEERING DEPARTMENT

| REV. | BY | DATE |
|---|---|---|
| | | |
| | | |
| | | |
| | | |

# SPLIT-FACE ROCK CURBING

STD. DWG. NUMBER **129-0**

APPROVED: Goutam K. Dobey, City Engineer RCE 75646

DATE: 01/03/2023

SHEET 1 OF 1

THIS PAGE INTENTIONALLY LEFT BLANK

# APPENDIX D

a. City Encroachment Permit Form

*(Contractor to obtain encroachment permit from the City as no-fee permit)*

THIS PAGE INTENTIONALLY LEFT BLANK

**Application for Road / Encroachment Permit**

City of Redlands - Municipal Utilities & Engineering Department **PERMIT NO. _____**

Name: _____ Phone: _____

Address: _____ City: _____ Zip: _____

Contractor: _____ USA ID No.: _____

Contractor License No.: _____ Type: _____ Cal OSHA No.: _____

I hereby request permission to construct/install improvements/facilities within the City of Redlands road right-of-way at the following location:

Construction Start Date: _____ Anticipated Completion Date: _____

Development No.: _____ Plan No.: _____

Street Name: _____

Cross Streets: _____

Address: _____

For the purpose of performing the following work:

_____

_____

Applicant/Agent Signature: _____ Date: _____

In accordance with Plans approved by the Municipal Utilities & Engineering Director and/or the Standard Specifications and Detail Drawings of the City of Redlands for the **quantity and type** of improvements listed below:

**SHADED AREA FOR OFFICIAL USE ONLY**

| | | | BASE | EACH | | |
|---|---|---|---|---|---|---|
| | EA | Driveway Appr, Res/Comm | $ 86.00 | $ 43.00 | EA | =$ |
| | SF | Sidewalk | $ 86.00 | $ .44 | SF | =$ |
| | SF | Cross Gutter/Spandrel | $ 86.00 | $ .87 | SF | =$ |
| | LF | Curb & Gutter | $ 86.00 | $ 3.28 | LF | =$ |
| | LF | Curb/Berm | $ 86.00 | $ 2.19 | LF | =$ |
| | SF | Asphalt Pavement | $ 10.00 | $ .09 | SF | =$ |
| | SF | Crushed Aggregate Base | $ 86.00 | $ .09 | SF | =$ |
| | EA | Street Light | $ 86.00 | $ 43.00 | EA | =$ |
| | EA | Traffic Signal - New | $ 86.00 | $ 2,568.00 | EA | =$ |
| | EA | Traffic Signal - Modification | $ 86.00 | $ 2,011.00 | EA | =$ |
| | CY | Reinforced Concrete | $ 86.00 | $ 130 | CY | =$ |
| | LF | Storm Drain Pipe | $ 86.00 | $ 5.21 | LF | =$ |
| | EA | Curb Inlet/Outlet Structures | $ 86.00 | $ 43.00 | EA | =$ |
| | EA | Storm Drain Manhole/Junction Box | $ 86.00 | $ 43.00 | EA | =$ |
| | EA | Curb Core | $ 86.00 | $ 43.00 | EA | =$ |
| | LF | Sewer Main | $ 86.00 | $ 1.73 | LF | =$ |
| | EA | Sewer Manhole | $ 86.00 | $ 43.00 | EA | =$ |
| | EA | Sewer Cleanout | $ 86.00 | $ 43.00 | EA | =$ |
| | EA | Sewer Lateral | $ 86.00 | $ 43.00 | EA | =$ |
| | LF | Water Main - Potable | $ 86.00 | $ 1.73 | LF | =$ |
| | LF | Water Main - Non-Potable | $ 86.00 | $ 1.73 | LF | =$ |
| | EA | Fire Hydrant Assembly | $ 86.00 | $ 43.00 | EA | =$ |
| | EA | Water Service Lateral | $ 86.00 | $ 43.00 | EA | =$ |
| | EA | Water Shutdown | $ 86.00 | $ 43.00 | EA | =$ |
| | EA | Fire Service | $ 86.00 | $ 43.00 | EA | =$ |
| | LF | Excavation/Utility Trench | $ 86.00 | $ 1.73 | LF | =$ |
| | SF | Street Patch | $ 86.00 | $ .18 | SF | =$ |
| | EA | Fire Flow Test | $ 79.00 | | EA | =$ |
| | SF | Warranty Fee (Street Cut) | $ | | SF | =$ |
| | EA | Traffic Safety Setup | $ 0.00 | $ 55.00 | EA | =$ |
| | HR | OT/Off Hrs Inspection (2 HR Min) | $ | $ 122.60 | HR | =$ |
| | | | $ | | | =$ |
| | | | $ | | | =$ |

Truck Route Permit Required: ☐ YES ☐ NO

Closure Permit With Traffic Plan Required: ☐ YES ☐ NO

Water Shutdown Required: ☐ YES ☐ NO

Bond Required: ☐ YES ☐ NO

Conduit Material: _____

Conduit Size: _____

Calculated By

Municipal Utilities & Engineering

**SUBTOTAL PERMIT FEE** $ _____

PERMIT FEE work complete within specified date from issuance = $ 339.00 fee. **$339.00**

PENALTY FEE 25% of total permit fee if issued after commencement of work $ _____

(Effective 10/7/2020) **TOTAL ENCROACHMENT PERMIT FEE $** _____

THIS PAGE INTENTIONALLY LEFT BLANK

# APPENDIX E

# TRASH COLLECTION SCHEDULE

THIS PAGE INTENTIONALLY LEFT BLANK

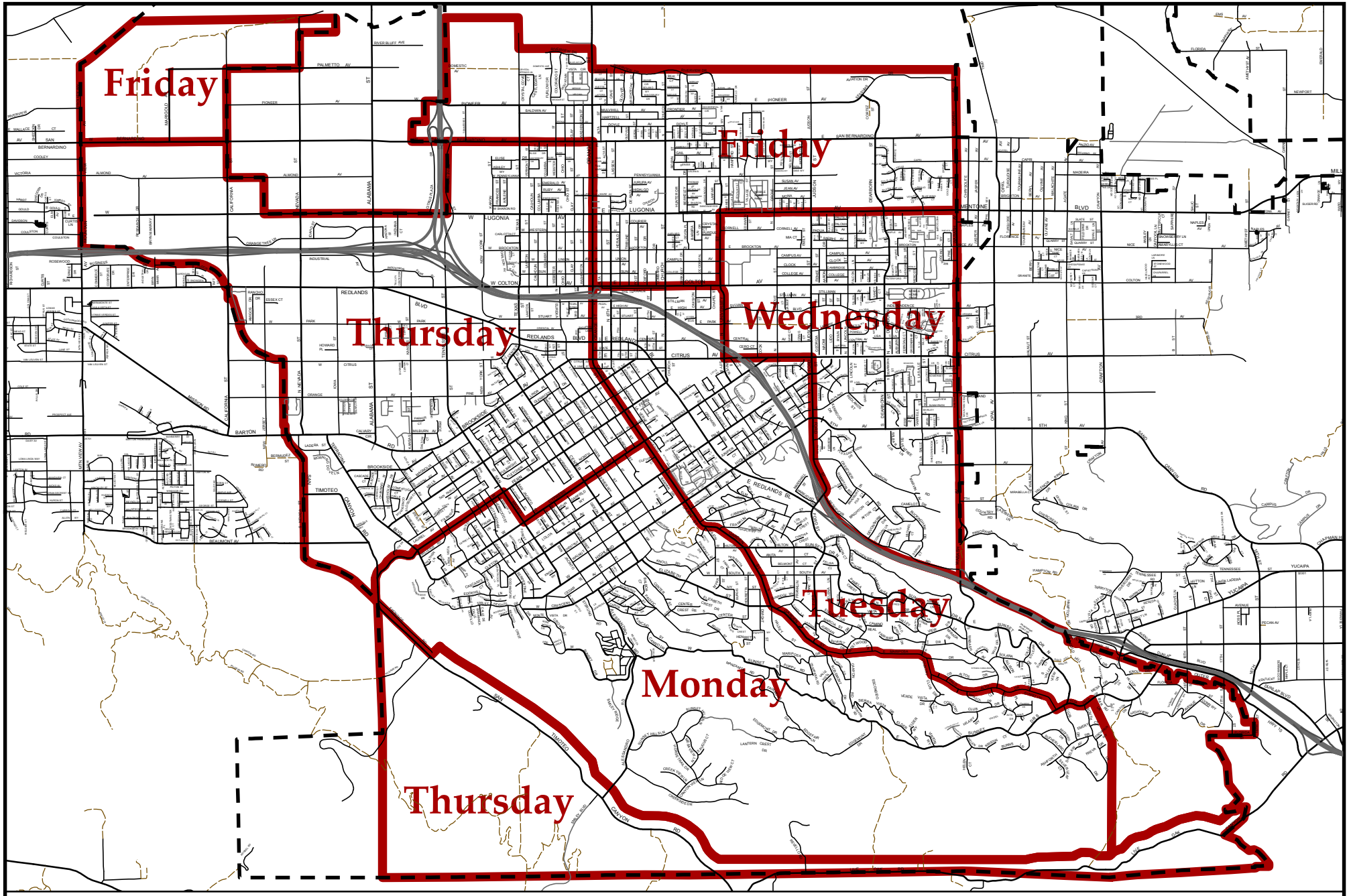


# Solid Waste Collection Days

City of REDLANDS "A City That Works"

wo1156RefuseDays8.5x11

November 15, 2013

N
W E
S

Scale

0 0.25 0.5 0.75 1

Miles

THIS PAGE INTENTIONALLY LEFT BLANK

# APPENDIX F

# CONTRACTOR SAFETY PROGRAM

THIS PAGE INTENTIONALLY LEFT BLANK

# CONTRACTOR SAFETY PROGRAM

Rev. July 2024

## TABLE OF CONTENTS

**I. POLICY** ..... **3**

**II. AUTHORITY** ..... **3**

**III. SCOPE** ..... **3**

**IV. DEFINITIONS** ..... **3**

**V. RESPONSIBILITIES** ..... **4**

RISK MANAGEMENT ..... 4
PROJECT MANAGER (CITY) ..... 5
INSPECTOR (CITY) ..... 5
EMPLOYEES (CITY) ..... 5
CONTRACTOR ..... 5
PROJECT SAFETY OFFICIAL ..... 6

**VI. PROGRAM** ..... **6**

SAFETY PREQUALIFICATION QUESTIONNAIRE ..... 6
APPEAL PROCESS ..... 7
CONSTRUCTION PROJECTS (TIER I AND TIER II) ..... 8
INSPECTIONS ..... 9
TRAINING/DOCUMENTATION ..... 9
NON-COMPLIANCE ..... 9
CITY PERSONNEL ..... 9

**VII. RECORDKEEPING** ..... **10**

**VIII. ADDITIONAL REFERENCES** ..... **10**

ACKNOWLEDGMENT OF RECEIPT (A) ..... 11
SAFETY PREQUALIFICATION QUESTIONNAIRE (B) ..... 12
NOTICE OF NONCOMPLIANCE (C) ..... 13
JOB HAZARD ANALYSIS (D) ..... 14
INCIDENT INVESTIGATION FORM (E) ..... 15

## I. Policy

The purpose of this Contractor Safety Program ("CSP") is to ensure, as best as reasonably possible, the protection and safety of all persons and property during construction activities undertaken by private contractors on behalf of the City of Redlands ("City"). The City has a comprehensive and structured approach in outsourcing services performed on City facilities by third-party persons and entities ("Contractor(s)"). The first phase of this comprehensive approach includes actively screening Contractors based on safety records, safety performance, and safety compliance. After the qualified Contractor is awarded a contract, the Contractor must then ensure compliance with all local, state, federal and Cal/OSHA regulations applicable to the contracted scope of work, and requirements set forth within this CSP. The Contractor, its agents, and personnel must adhere to the policies and procedures set forth by this CSP and all applicable laws and regulations.

## II. Authority

California Code of Regulations, Title 8, Section 336.10 "Determination of Citable Employer"
California Code of Regulations, Title 8
"Greenbook" Standard Specifications for Public Works Construction
Redlands Municipal Code
California Building Code

## III. Scope

This CSP applies to all Contractors who provide or render construction or improvement services for City-owned property and facilities.
The Contractor services covered under this CSP include, but are not limited to, the following:

A. New construction;
B. Remodeling;
C. Facility maintenance or repair;
D. Equipment installation or maintenance; and
E. Services (i.e. janitorial, fleet operations, landscaping, etc.)

Consultants/ Professional service providers are exempt from having to submit a Safety Prequalification Questionnaire ("SPQ"), prior to the beginning of work, but they are expected to be compliant with industry best practices with regards to maintaining a safe work environment for their employees and others.

## IV. Definitions

A. **Contract –** any written agreement between the City of Redlands and a Contractor, to perform a specified scope of work on City facilities. With respect to this policy, a contract includes, but is not limited to: awarded purchase orders, bids, and/ or project contracts.
B. **Construction Work –** construction, alteration, and/or repair, including painting and decorating.
C. **Contractor –** a person or entity (including all personnel) awarded a contract to perform work on City property or facilities.
D. **D.A.R.T Rate –** Injuries and illnesses severe enough to warrant: Days Away, Restrictions and Transfers. The DART rate is calculated using the following formula: Number of OSHA Recordable injuries and illnesses that resulted in Days Away x 200,000/divided by total hours worked by all employees during the year covered.

E. **Designated Work Area –** an area where it is necessary to restrict or limit entry or access of nonessential personnel or the public. Examples include work areas involving remediation abatement, demolition, excavation, and overheadlifting.
F. **Facilities –** any building or property owned by the City of Redlands.
G. **Hazard –** source or situation with a potential for harm in terms of injury or health, damage to property, damage to workplace environment, or a combination ofthese.
H. **Job Hazard Analysis ("JHA") –** a technique that focuses on job tasks as a way to identify hazards before they occur. It focuses on the relationship between the worker, the task, the tools, and the work environment. The objective is to eliminate the risk or to utilize control measures to reduce the risk.
I. **North American Industry Classification System ("NAICS") –** is the standard used by Federal statistical agencies in classifying business establishments for the purpose of collecting, analyzing, and publishing statistical data related to the U.S. businesseconomy.
J. **Non-compliance –** any deviation from standards, practices, processes, procedures, regulations etc. that could either directly or indirectly lead to injury or illness, property damage, damage to the workplace environment, or any combination of thesecriteria.
K. **Notice of non-compliance –** form provided to the Contractor by the City alerting the contractor of non-compliance with City specifications, Cal/OSHA regulations, or any other generally accepted safe work practice.
L. **Non-compliant hazardous work condition –** any hazard that is considered to be non-compliant with State or Federal safety and health regulations, City specifications, or any inconsistency with generally accepted work practices.
M. **Personnel –** all Contractor employees, contractors, sub-contractors and agents providedaccess to City property or facilities.
N. **Recordable Incident** – any injury or illness resulting in death, days away from work, restricted work or transfer to another job, medical treatment beyond first aid, or loss of consciousness per OSHA Section 1904.7(a).
O. **Safety Tailgate –** informal safety meeting generally conducted at the job site prior to the commencement of a job or work shift.
P. **Services –** any and all, labor, duties, functions and activities required to be performed by the Contractor under the contract and any subsequent addenda.

## V. Responsibilities

RISK MANAGEMENT

A. Update, maintain, and administer this CSP;
B. Maintain centralized records of training, site visit data, written programs, tailgate meetings, permits, and all other necessary contractor related documentation;
C. Provide technical assistance to Engineering personnel;
D. Attend Pre-construction meetings and progress meetings as needed;
E. Provide assistance on safety inspections as needed;
F. Review safety submittals;
G. Provide guidance on pre-qualification determination; and
H. Provide training to affected city personnel with responsibilities under thisprogram.

## PROJECT MANAGER (CITY)

The Project Manager has the authority to delegate any or all portions of this CSP to subordinates, but the Project Manager will be held accountable for their compliance. The Project Manager shall contact Risk Management, as necessary, for assistance in relation to this CSP.

A. Ensure safety hazards are addressed in a timely manner;
B. Communicate safety concerns during pre-construction meetings and progress meetings;
C. Inform impacted employees of construction activities scheduled in their work area;
D. Enforce pre-qualification procedures in bidding process; and
E. Ensure this CSP is properly executed.

## INSPECTOR (CITY)

The City of Redlands construction inspector is not a safety professional and will only provide "Notice of Non-Compliance" for obvious and serious non-compliant conditions.

A. To the best of their abilities, inspect work sites for safety hazards;
B. Communicate safety concerns to Contractor;
C. Provide Contractor with "Notice of Non-Compliance" when serious conditions occur or repeat violations;
D. Collect documentation needed for construction worksites;
E. Submit documentation to Risk Management for recordkeeping;
F. Maintain photo documentation of safety hazards;
G. Never enter situations that can harm or endanger himself/herself;
H. Never use personal protective equipment (PPE) or enter situations, which they are not trained for;
I. Contact Emergency Medical Services (911) and Risk Management in case of emergency; and
J. Attend and communicate safety concerns in progress meetings.

## EMPLOYEES (CITY)

A. Immediately notify the Project Manager, inspector, or Risk Management of any safety related concerns at a Contractor job site; and
B. Contact Emergency Medical Services (911) and Risk Management in case of emergency.

## CONTRACTOR

Where relevant and applicable, the Contractor's responsibilities shall include:

A. Compliance with requirements and responsibilities detailed within the Contractor Safety Program;
B. Ensure all local regulatory requirements are met and all necessary permits are obtained before conducting work on behalf of the City;
C. Designate a Project Safety Official by name who shall always be available to abate safety hazards;
D. Ensure all personnel have the appropriate qualifications and training to perform the contracted work (Copies of current training documentation and certifications must be on file with the City);
E. Inform City Project Manager or inspector of any job site safety hazards or concerns;
F. Inform City Project Manager if any suspected asbestos-containing material is located;
G. Conduct and submit Job Hazard Analysis (JHA) before work and as required by change of tasks;
H. Conduct and submit Safety Tailgates on a bi-weekly basis;
I. Provide all required PPE necessary to conduct work safely and in accordance with required local regulations;
J. The safety of all individuals who enter work site;
K. Spill cleanup;
L. Immediately report any incidents, accidents, near misses, unsafe conditions, or unsafe acts involving any jobsite personnel;

M. Arrange for the proper storage and removal of waste generated prior to the completion of job, and provide confirmation that the materials have been removed or disposed of in a manner compliant with all applicable environmental regulations;
N. Removing all equipment used during work activities and ensuring proper housekeeping of designated work area at the end of each workday and upon completion of the job;
O. Contact Emergency Services (911) and Project Manager in the event of an emergency; and
P. For the actions of their subcontractors, as they may pertain to this CSP, including their adherence to its contents and review of this document.

PROJECT SAFETY OFFICIAL (CONTRACTOR)

A. Shall always be at the work site;
B. Must be thoroughly familiar with the Contractor's Injury and Illness Prevention Program (IIPP) and Code of Safe Practices;
C. Shall always be available to abate any potential safety hazards; and
D. Shall have the authority and responsibility to shut down an unsafe operation, if necessary.

## VI. Program

SAFETY PREQUALIFICATION PROCESS

A. The safety prequalification process is intended to:
   - Provide the City with knowledge of past and current safety performance of Contractors working on City construction projects;
   - Improve Contractor compliance with City safety rules, including safe work practices required by applicable regulations and laws; and
   - Improve safety during Contractor activities.
B. A copy of the SPQ shall be provided to each person or entity bidding on a project, as part of the bidding process.
C. The completed questionnaire shall be returned and reviewed prior to awarding contract work, with supporting information provided as indicated by responses on the questionnaire.
D. The SPQ shall be submitted to 35 Cajon St., Suite 4
   Redlands Ca, 92373
   Attention: Project Name-Contractor Name-SPQ
E. The following criteria and information relating to the Contractor will be reviewed prior to awarding contract:
   - Contractor License;
   - Incident Rates;
   - OSHA Citations;
   - Safety Policies;
   - Safety Programs and Procedures;
   - Compliance History on City Projects; and
   - Certification Statement.
F. Contractor must qualify in each section to be approved for the award of a contract.
G. If a Contractor fails to pass prequalification procedure, the City has the right to disqualify the Contractor's proposal.

H. All costs associated with compliance with City of Redlands prequalification requirements shall be at the sole expense of the Contractor.
I. If a Contractor provides information that is later determined to be false, or improperly withholds information, the Contractor will be immediately disqualified.
J. Any questions or information relating to filing this questionnaire may be answered by reaching:
   - Engineering: (909) 798-7698; or
   - Risk Management: (909) 798-7514

## DISQUALIFICATION APPEAL PROCESS

This provision is established pursuant to Public Contract Code section 20101(d) which requires every public agency that requires prospective bidders to prequalify pursuant to the law to establish "a process that will allow prospective bidders to dispute their proposed prequalification rating prior to selection of an alternate bidder." If the City intends to disqualify a bidder based upon the bidder's safety record, the City will notify the bidder in writing and provide the bidder with any supporting evidence that has been received from others or adduced because of an investigation by the City. The notice of intention shall be sent by certified mail with return receipt requested or by overnight mail via a delivery service that provides online tracking which identifies the date of the prospective bidder's receipt of the notice, and shall include notice that the bidder has the right to, and may request a hearing to rebut any evidence used as a basis for disqualification and to present evidence to the City as to why the prospective bidder should be found qualified. Requests for a hearing must be made by written request to the City within ten calendar days of the date of the prospective bidder's receipt of the City's notice of intention. If the bidder does not request a hearing within the time allowed, the City's determination shall stand unchallenged and become final.

Within seven calendar days of receiving the bidder's request for a hearing, the City shall notify the bidder in writing of the date, time and place of the hearing. The hearing shall be held no sooner than ten (10) calendar days and no later than fifteen (15) calendar days after the notice is given. The notice shall inform the bidder of its right to present testimony and documents in support of its position.

The hearing shall be conducted before the Redlands City Manager, which may be continued from time to time as reasonably determined by the City Manager but shall not exceed forty five (45) days. At the conclusion of the hearing, and after considering all testimony and documentation presented, the City Manager shall issue a written decision no later than five calendar days following the hearing. The City Manager's decision shall be final and is not subject to further appeal to the City.

The bidder shall not be entitled to bid on any contracts with the City until it has met the safety pre-qualification standards. If the City Manager approves an appeal, the contractor will have been deemed to meet the qualification standards and it will be valid for one year. The bidder shall have the right to withdraw its application for prequalification or its appeal at any time before the City Manager's decision becomes final. Such withdrawal will not preclude the bidder from re-applying for prequalification.

## CONSTRUCTION PROJECTS

A. After a contract is awarded, the Contractor shall maintain, throughout the duration of the project, safety measures as necessary to protect the public and workers within, or in the vicinity of, the designated work zone. This includes an evaluation of the work to be performed and the hazards likely to be encountered. Contractors are expected to follow, at a minimum, all pertinent laws, rules, and regulations for the location in which they will be working. Where applicable, Contractor Safety Programs will meet or exceed City programs/ procedures and are subject to review and approval by the City prior to contract execution.

B. Job Hazard Analysis ("JHA")
   1. Prior to a notice to proceed a JHA must be completed utilizing the City's form, or equivalent, to assess the hazards present in the designated work area. Any information requested on the City's form, but not stated on the equivalent form utilized, shall be provided separately with the original submission.
   2. All members of the construction unit must sign the JHA to acknowledge hazard abatement procedures.
   3. JHA must be kept at job site accessible to all impacted personnel.
   4. Failure to follow JHA procedures may lead to termination of the contract.
C. Personal Protective Equipment ("PPE")
   1. All required PPE must be always worn during work activities.
   2. All mandatory PPE must be highlighted in the JHA.
   3. The Contractor shall provide PPE.
   4. Failure to follow PPE guidelines may lead to termination of the contract.
D. Safety Tailgates
   1. Safety Tailgate Meetings must be held on a biweekly basis for all construction projects.
   2. The first meeting shall take place on Day 1, Week 1 and every other week thereafter.
   3. Tailgates shall be signed by all personnel and submitted to Construction Inspector for recordkeeping.
   4. Tailgate topics should be specific to the scope of work of the project.
E. Injury Reporting
   1. Contractors shall immediately report injuries or accidents to the Project Manager (regardless of severity). Additionally, contractors are responsible for and must also conduct accident investigations of any injuries that occur on site and provide results to the Project Manager.
   2. Use the City Incident Investigation Form (Attachment E), or equivalent, to meet this requirement.
F. Spill Prevention
   1. The Contractor is responsible for any spill within the confines of the project and those outside of the construction limits caused by the Contractor's defective equipment, containers, or personnel.
   2. Secondary spill containment systems shall be used to prevent contamination of the environment.
G. Construction in Occupied Buildings
   1. When building occupants are present during construction projects additional safeguards must be implemented to eliminate exposures and complaints. Dust/ particulates from demolition, sanding and other construction activities must be controlled by adequate ventilation, or containment and negative air ventilation systems based upon the specific type of activity and particle. Similar controls must be utilized for odorous activities including, but not limited to, carpet adhesive, painting, welding, and coatings.
   2. The Contractor shall ensure that the HVAC system is protected to prevent contamination. If an HVAC system is unprotected and contaminated by any construction/demolition materials, the Contractor shall be held responsible for the cost of cleaning the system and any subsequent repairs therein.
   3. Negative air ventilation systems shall have appropriate filtration and be exhausted outside of the building.

<u>INSPECTIONS</u>

A. Follow-up inspections will be executed to enforce compliance with safety and health requirements.
B. Follow-up inspections will be conducted as part of routine site inspections by construction inspector and Risk Management employees.

C. The SPQ aims to provide the City with knowledge of Contractor safety history and safety practices. This minimizes the need for an increased frequency of inspections. In addition, the City will take the following guidelines into consideration when determining the frequency of inspections.
    1. Scale of project;
    2. The frequency with which the number and types of hazards change as the work progresses;
    3. More frequent inspections will be implemented in the beginning of the project; and
    4. When the Contractor has never worked for the City.

TRAINING/DOCUMENTATION

A. The contractor will ensure that all personnel are trained for the scope of work they are assigned, as well as the equipment they will be utilizing.
B. Documentation shall be on file with the City prior to project start.
C. Personnel missing training documentation shall not be permitted to work on awarded City projects.
D. Training requirements are mandated by Federal and State Regulations. This may include, but is not limited to, the programs listed in the SPQ.

NON-COMPLIANCE

A. Contractor compliance issues shall be documented on the "Notice of Non-Compliance" form. A copy of this form shall be provided to the Contractor for completion.
B. Upon receipt of the completed "Notice of Non-Compliance" form, the Project Manager and Risk Management will evaluate, based on the incident, and identify, as appropriate, any additional corrective and/or preventive actions for completion.
C. If immediate correction is not feasible, the project will be temporarily stopped until the issue is adequately resolved.
D. City staff with authority to stop work are:
    1. Construction Inspector;
    2. City Project Manager;
    3. City Manager; and
    4. Risk Management staff.
E. Any violation or deviation from safety rules, procedures, or regulations, based on evaluation, may be subject to all disciplinary actions listed as follows:
    1. Verbal warning
    2. Written warning-Notice of Non-Compliance (work may not continue until approved corrections are implemented);
    3. Dismissal of non-complying personnel; and/or
    4. Termination of Contract.

**The City of Redlands maintains the right to terminate any contract for the violation of safety issues without liability to the City.**

CITY PERSONNEL

A. All affected City employees will be informed in advance of any construction related work or other contract work which has the potential for impacting their workplace. Notifications will be made to all affected employees via e-mail or written memo by the Project Manager or designee. Notifications must include the following information:
    1. Start and end dates of the work to be completed;
    2. Work areas to be affected;

3. Description of work to be completed;
4. Name and phone number of Project Manager;
5. Name and phone number of Construction Inspector; and
6. Name and phone number of Risk Management.

B. Employees should be instructed to notify the Project Manager regarding logistical issues or other concerns. Safety and Health concerns should be directed to either the Project Manager, Inspector, or Safety Specialist.

## VII. Recordkeeping

The City's Human Resources / Risk Management Department will maintain all records prepared in association with this CSP, with copies also place on file with the office of the City Clerk.

## VIII. Additional References

https://www.dir.ca.gov/title8/336_10.html

# City of Redlands
# Acknowledgment of Receipt Statement

I acknowledge by signing this document, that I have received and reviewed the City of Redlands' Contractor Safety Program and understand that it contains valuable information on the City's policies and procedures regarding employee safety as it pertains to Contractor activities. Furthermore, I acknowledge that failure to comply with any of these procedures may lead to termination of the contract with the City.

| | |
|---|---|
| Contractor Signature | Contractor Title: |
| Contractor Name (Print) | Date Signed |

If you have any questions regarding this document, please contact the
Risk Management Division at (909) 798-7514.

# CITY OF REDLANDS
# SAFETY PREQUALIFICATION QUESTIONNAIRE

**Omitting or reporting false information on this questionnaire may result in disqualification of bid. The City of Redlands reserves the right to conduct random or for-cause audits of information stated in this questionnaire. If deemed necessary, additional documentation may be requested by the City to verify responses on this questionnaire.**

## SECTION 1 – GENERAL INFORMATION

| | |
|---|---|
| Company Name: | |
| Contractor License #: | Expiration Date: |
| Address: | |
| City: | State: Zip Code: |
| Name of Person Submitting Application: | |
| Title: | Telephone #: |
| Email Address: | |
| Identify the highest-ranking Safety/Health Professional in your Company: | |
| Name: | |
| Title: | Telephone #: |

## SECTION 2 – INCIDENT RATES & WORKER'S COMPENSATION INFORMATION

| INCIDENT RATES<br>**Provide your actual injury and illness data below:** | Provide the NAICS Code Number that best represents your Firm:_____<br>Provide any additional numbers here:<br>_____ |
|---|---|

| (Provide three full years of data) | Last Calendar | 2 Years Ago | 3 Years Ago |
|---|---|---|---|
| | | | |
| Number of hours worked by all employees: | | | |
| Total Recordable Incident Rate*: | | | |
| D.A.R.T. Rate*: | | | |
| Total Number of Fatalities: | | | |

**Incident Rate** = [(Total Recordable Cases X 200,000 hours)/ Number of hours worked by all employees]

**D.A.R.T. Rate** = [(Total Number of entries for Days Away, Restricted and Job Transfer X 200,000 hours)/ Number of hours worked by all employees]

If your latest incident rates and D.A.R.T. rates are greater than 100% of the industry average for all your NAICS code Numbers Listed, your bid may be disqualified.

The industry average can be found at www.bls.gov

## WORKERS' COMPENSATION INFORMATION

**1. Provide your Workers' Compensation Experience Modification Rate (EMR) Data:**

| | Policy Year | EMR |
|---|---|---|
| Current EMR* | | |
| 1 Year Ago: | | |
| 2 Years Ago: | | |
| 3 Years Ago: | | |

* If your current EMR is greater than 1.25, initialing here certifies that you will provide a competent, full- time person or representative responsible for safety for all City projects:_____

* Initialing here certifies that your firm does not have an EMR:_____
(Submit a copy of your firm's Loss Run Reports for the last three years if your firm does not have an EMR.)

Name of your firm's Workers' Compensation carrier:

Phone Number of Workers' Compensation carrier

| **2. Is your firm self-insured for Workers' Compensation claims?** | Yes ❒ | No ❒ |
|---|---|---|
| If yes, please attach a copy of the latest Annual Report to the State of California Department of Industrial Relations and/or State of California Certificate of Self-Insurance.) | | |

## SECTION 3– CITATION HISTORY

| 1. Has your firm received any regulatory citations in the last threeyears? | Yes ❒ | No ❒ |
|---|---|---|
| If yes, please answer the question below. | | |

| | | |
|---|---|---|
| 2. Were any of the confirmed (Closed) citations classified as Serious, Willful, Repeat, or Failure to abate? | Yes ❒ | No ❒ |
| 3. If yes, please explain: | | |
| | | |
| | | |
| 4. Have you abated all the citations issued to you in the last three years | Yes ❒ | No ❒ |
| If no, please explain abatement action plan: | | |
| | | |
| | | |

## SECTION 4 – SAFETY POLICIES

| | Questions (Please check YES or NO) | YES | NO* |
|---|---|---|---|
| 1. | Does your company provide and adhere to a written Illness Prevention Program (IIPP) (CCR Title 8 §3203(a))? If yes, a copy of the program will be required on-hand at the job site throughout the duration of the contract. Please attach a copy to your bid proposal. | ☐ | ☐ |
| 2. | Does your company provide and conduct Tailgate Meetings or equivalent with employees at least every 10 working days? (CCR Title 8 §1509(e)) | ☐ | ☐ |
| 3. | Does your company have a policy for disciplinary action for unsafe behavior ensuring employee compliance with safe and healthy work practices? (CCR Title 8 §3203(a)(2)) | ☐ | ☐ |
| 4. | Does your company provide and abide by a written Code of Safe Practices that relates to your firm's operations. (CCR Title 8 §1509(b)) If yes, a copy of the Code of Safe Practices will be required on-hand at the job site throughout the duration of the contract. Please attach a copy with your bid proposal. | ☐ | ☐ |
| 5. | Does your company perform JHAs? (CCR Title 8 §1511(b) | ☐ | ☐ |
| 6. | Does your company provide training and retraining programs for ensuring employee compliance with safe and healthy work practices? (CCR Title 8 §3203 (a)(2), (a)(7) | ☐ | ☐ |
| 7. | Does your company provide training and retraining programs for ensuring employee compliance | ☐ | ☐ |
| *Please provide reason(s) for NO answer in the box below or on a separate sheet of paper. | | | |

**Failure to provide the above-referenced documents will result in the contractor's bid being disqualified.**

## SECTION 5 – SAFETY PROGRAMS AND PROCEDURES

**PLEASE ANSWER ALL QUESTIONS BY CHECKING YES OR NO, AND ATTACHING APPROPRIATE DOCUMENTS THAT MAY APPLY OR AS REQUESTED.**

| | | YES | NO |
|---|---|---|---|
| 1. | **Is Confined Space work anticipated in the scope of the work awarded? (If no, please proceed to Question 2)** | ☐ | ☐ |
| | If yes, please attach the following: | Attached? | |
| | Copy of written Confined Space Entry Procedure | ☐ | ☐ |
| | List of personnel authorized on jobsite to work in confined space(s) | ☐ | ☐ |
| | List of personnel authorized on jobsite to serve as Rescue Team | ☐ | ☐ |
| | Verification of personnel training (copies of certs, cards, etc.) | ☐ | ☐ |

| | | | |
|---|---|---|---|
| 2. | **Is work requiring Lockout/Tagout protocols anticipated in the scope of the work awarded? (If no, please proceed to Question 3)** | ☐ | ☐ |
| | If yes, please attach the following: | Attached? | |
| | Copy of written Lockout/Tagout (LOTO) Procedure | ☐ | ☐ |
| | List of personnel authorized on jobsite to perform LOTO | ☐ | ☐ |
| | Verification of personnel training (copies of certs, cards, etc.) | ☐ | ☐ |

| | | | |
|---|---|---|---|
| 3. | **Is work requiring a personal lift anticipated in the scope of the work awarded? (If no, please proceed to Question 4)** | ☐ | ☐ |
| | If yes, please attach the following: | Attached? | |
| | List of personnel authorized on jobsite to use lifts | ☐ | ☐ |
| | Verification of personnel training (copies of certs, cards, etc.) | ☐ | ☐ |

| | | | |
|---|---|---|---|
| 4. | **Is work requiring a forklift anticipated in the scope of the work awarded? (If no, please proceed to Question 5)** | ☐ | ☐ |
| | If yes, please attach the following: | Attached? | |
| | List of personnel authorized on jobsite to use a forklift | ☐ | ☐ |
| | Verification of personnel training (copies of certs, cards, etc.) | ☐ | ☐ |

| | | | |
|---|---|---|---|
| 5. | **Is work requiring a crane anticipated in the scope of the work awarded? (If no, please proceed to Question 6)** | ☐ | ☐ |
| | If yes, please attach the following: | Attached? | |
| | Copy of written Crane Program | ☐ | ☐ |
| | Copy of all expected Crane operators' Certifications | ☐ | ☐ |
| | List of personnel designated as Competent under Crane program | ☐ | ☐ |
| | Verification of personnel training (copies of certs, cards, etc.) | ☐ | ☐ |

NOTE: If awarded bid, more documentation may be required

| | | | |
|---|---|---|---|
| 6. | **Is Hot Work (as defined by OSHA) anticipated in the scope of the work awarded? (If no, please proceed to Question 7)** | ☐ | ☐ |
| | If yes, please attach the following: | Attached? | |
| | Copy of written Hot Work Procedure | ☐ | ☐ |
| | List of personnel authorized on jobsite to perform Hot Work | ☐ | ☐ |
| | Verification of personnel training (copies of certs, cards, etc.) | ☐ | ☐ |

| | | | |
|---|---|---|---|
| 7. | **Is Trenching/ Excavation work anticipated in the scope of the work awarded? (If no, proceed to Question 8)** | ☐ | ☐ |
| | Is a plan in place for the disposal of all material that cannot be returned to the trench/ excavation? | ☐ | ☐ |
| | Are appropriate materials for barricading or securing work area at jobsite? | ☐ | ☐ |
| | Has a permit from the Department of Industrial Relations for excavations deeper than 5 feet been obtained? | ☐ | ☐ |
| | If yes, please attach the following: | Attached? | |
| | Copy of written Trenching/ Excavation Procedure | ☐ | ☐ |
| | Copy of Permit if trench is to exceed depth of 5 feet | ☐ | ☐ |
| | List of personnel designated as Competent under Trenching/ Excavation Program | ☐ | ☐ |
| | Verification of personnel training (copies of certs, cards, etc.) | ☐ | ☐ |

NOTE: If awarded bid, more documentation may be required

| | | | |
|---|---|---|---|
| 8. | **Is electrical work anticipated in the scope of the work awarded? (If no, proceed to Question 9)** | ☐ | ☐ |
| | If yes, please attach the following: | Attached? | |
| | Copy of written Electrical Safety Program | ☐ | ☐ |
| | List of personnel designated as Competent under Electrical Safety Program | ☐ | ☐ |
| | Verification of personnel training (copies of certs, cards, etc.) | ☐ | ☐ |

| | | | |
|---|---|---|---|
| 9. | **Is work that may have an arc flash potential anticipated in the scope of the work awarded? (If no, proceed to Question 10)** | ☐ | ☐ |
| | Are all materials required to safely perform arc flash present? | ☐ | ☐ |
| | If yes, please attach the following: | Attached? | |
| | Copy of Arc Flash Procedure | ☐ | ☐ |
| | List of personnel designated as Competent under Arc Flash Program | ☐ | ☐ |
| | Verification of personnel training (copies of certs, cards, etc.) | ☐ | ☐ |

| | | | |
|---|---|---|---|
| 0. | **Is work involving chemicals anticipated in the scope of the work awarded? (If no, proceed to Question 11)?** | ☐ | ☐ |
| | If yes, please attach the following: | Attached? | |
| | Copy of written Hearing Conservation Program | ☐ | ☐ |
| | List of personnel working in high noise areas | ☐ | ☐ |
| | Verification of personnel training (copies of certs, cards, etc.) | ☐ | ☐ |

| | | | |
|---|---|---|---|
| 1. | **Is work involving chemicals anticipated in the scope of the work awarded? (If no, proceed to Question 12)?** | ☐ | ☐ |
| | * Copies of SDS for Chemicals used must be kept at jobsite | | |
| | Please attach the following: | Attached? | |
| | Copy of written Hazard Communication Program | ☐ | ☐ |
| | List of personnel performing work with chemicals | ☐ | ☐ |
| | Verification of personnel training (copies of certs, cards, etc.) | ☐ | ☐ |
| | **List trade names of all hazardous materials which you will be using on site:** | | |
| | | | |
| | | | |
| | | | |
| | | | |

| | | | |
|---|---|---|---|
| 2. | **Is work on or adjacent to public roadways anticipated in the scope of the work awarded? (If no, proceed to Question 13)** | ☐ | ☐ |
| | Do you have the appropriate provisions (signs, devices, barricades/) | ☐ | ☐ |
| | Please attach the following: | Attached? | |
| | Please provide a list of personnel working in traffic areas. | ☐ | ☐ |
| | Verification of personnel training (copies of certs, cards, etc.) | ☐ | ☐ |

NOTE: If awarded bid, more documentation may be required

| | | | |
|---|---|---|---|
| 3. | **Is it anticipated in the scope of the work awarded that exposure to asbestos is possible? (If no, proceed to Question 14)** | ☐ | ☐ |
| | Please attach the following: | Attached? | |
| | Copy of written procedure(s) | ☐ | ☐ |
| | List of personnel working with potential exposure to asbestos | ☐ | ☐ |
| | Verification of personnel training (copies of certs, cards, etc.) | ☐ | ☐ |

| | | | |
|---|---|---|---|
| 4. | **Is it anticipated in the scope of the work awarded that exposure to silica is possible? (i.e. sandblasting, concrete demolition, concrete saw cutting, surface grinding, etc.) (If no, proceed to Question 15)** | ☐ | ☐ |
| | Please attach the following: | Attached? | |
| | Copy of Silica Control Plan | ☐ | ☐ |
| | List of personnel working with potential exposure to silica | ☐ | ☐ |
| | Verification of personnel training (copies of certs, cards, etc.) | ☐ | ☐ |

| | | | |
|---|---|---|---|
| 5. | **Is work at heights anticipated in the scope of the work awarded? (If no, proceed to Question 16)** | ☐ | ☐ |
| | Please attach the following: | Attached? | |
| | Copy of written Fall Protection Program | ☐ | ☐ |
| | List of personnel designated as Competent under Fall Protection Program | ☐ | ☐ |
| | Verification of personnel training (copies of certs, cards, etc.) | ☐ | ☐ |

| | | | |
|---|---|---|---|
| 6. | **Is work requiring the use of respirators anticipated in the scope of the work awarded? (If no, proceed to Question 17)** | ☐ | ☐ |
| | Please attach the following: | Attached? | |
| | Copy of written Respiratory Protection Program | ☐ | ☐ |
| | List of personnel using respirators | ☐ | ☐ |
| | Verification of personnel training (copies of certs, cards, etc.) | ☐ | ☐ |

| | |
|---|---|
| 7. | **If the scope of work to be performed is not adequately represented by questions (1-16), please list any additional Health & Safety concerns below.** |
| | |

## SECTION 6 – COMPLIANCE HISTORY ON CITY PROJECTS

In addition to the previous sections, Contractors that have previously been awarded work by the City, will be equally evaluated on their compliance history in relation to City projects.

## SECTION 7 – CERTIFICATION STATEMENT

I Certify under penalty of perjury that:

a. the information contained herein is true and correct to the best of my knowledge, and

b. no attempt has been made to give false or misleading information or to withhold any information.

| | |
|---|---|
| Signature of Authorized Representative: | Title of Authorized Representative |
| Printed Name of Authorized Representative | Date Signed: |

# NOTICE OF NON-COMPLIANCE

Project: _____

Contractor: _____

Notice of Non-Compliance was issued to Contractor's representative,_____,
Name

on_____at_____.

The following unsafe behaviors were observed at the Contractor's job site:

_____
_____
_____
_____
_____
_____
_____

If the unsafe condition is not immediately corrected, the City of Redlands may take disciplinary action in accordance with the Contractor Safety Program guidelines.

_ _ _ _

# Job Hazard Analysis

| Project: | | | |
|---|---|---|---|
| Company: | Project Safety Official: | Project Manager (City): | |
| Scope of Work: | | Location: | Date: |

| Tasks | Potential Safety Risks/Hazards | Safety Controls/Mitigate | Required PPE |
|---|---|---|---|
| | | | ☐ Hard Hat<br>☐ Safety Vest<br>☐ Safety Glasses/Goggles<br>☐ Safety Boots<br>☐ Respirator<br>☐ Safety Gloves<br>☐ Face Shield<br>☐ Fall Protection<br><br>☐ Other:<br>_____<br>_____<br>_____<br>_____ |
| | | | |
| | | | |
| | | | |
| | | | |
| | | | |

Signatures of Employees On-Site this JHA is applicable to:

| **Employee Signature:** | **Print Name:** | **Date:** |
|---|---|---|
| | | |
| | | |
| | | |
| | | |
| | | |

# INCIDENT INVESTIGATION FORM

| | | |
|---|---|---|
| Date of Incident: | Time of Incident: | Date Reported: |
| Lead Investigator: | Contact Information: | |
| Contractor: | Employee Name: | |
| Witness 1 Name: | Telephone: | |
| Witness 2 Name: | Telephone: | |
| Incident Site/ Location | | |
| Incident Summary: | | |
| Near Miss Yes No | Incident Severity: Minor Significant Major Critical | |
| Root Cause(s): | | |
| Corrective Actions: | | |

**City Council/Financing Authority Meeting** **N. 3.**

**DATE:** 09/16/2025

**TO:** Honorable Mayor and City Council Members

**SUBJECT:** Approve the minutes of the regular meeting of May 20, 2025 (Secretary Donaldson)

---

**MOTION:**

I move to approve the minutes of the regular meeting of May 20, 2025.

---

**Attachments**

Regular meeting minutes of May 20, 2025

---

# MINUTES

Regular meetings of the City Council and the Redlands Financing Authority of the City of Redlands held in the Council Chambers, Civic Center, 35 Cajon Street, on May 20, 2025 at 5:00 P.M.

Present: Mario Saucedo, Mayor
Marc Shaw, Mayor Pro Tempore
Paul Barich, Council Member
Eddie Tejeda, Council Member
Denise Davis, Council Member

Staff: Charles M. Duggan, Jr., City Manager; Yvette M. Abich Garcia, City Attorney; Jeanne Donaldson, City Clerk; Phillip Doolittle, City Treasurer; Janice McConnell, Assistant City Manager; Chris Boatman, Assistant City Manager; Carl Baker, Public Information Officer; Danielle Garcia, Management Services/Finance Director; Brian Desatnik, Development Services Director; John Harris, Municipal Utilities and Engineering Director; Reggie Brown, Deputy Fire Chief; Stephen Crane, Deputy Police Chief; Tabitha Crocker, Facilities and Community Services Director; Robert Meteau, HR/Risk Management Director

Mayor Saucedo called the meeting to order and explained that comments could be presented in-person, via Zoom, via cell phone or landline. He offered the public an opportunity to provide comment on any item on the agenda for the closed session.

PUBLIC COMMENT

Existing Litigation - Steve Rogers addressed Item C.3, regarding the existing litigation related to Chiakowsky, et, al. v. City of Redlands, stating he had raised concerns about the engineering designs of the intersection in question at the time of its construction. He thought it unsafe and pointed to the fact that the director overseeing the project was not a licensed engineer. He said the City should settle this litigation sooner rather than later.

CLOSED SESSION

CONFERENCE WITH LEGAL COUNSEL- ANTICIPATED LITIGATION PURSUANT TO GOVERNMENT CODE SECTIONS 54956.9(d)(2) and (e)(3): A point has been reached where, in the opinion of the legislative body of the local agency on the advice of its legal counsel, based on existing facts and circumstances, there is a significant exposure to litigation against the local agency, based on the receipt of a government claim from claimant Crystal Adrianna Martinez threatening litigation (copy available for public inspection in City Clerk's Office).

Conference with legal counsel: Anticipated Litigation - Government Code §54956.9(d)(2)(e)(2)
(Assistant City Manager McConnell)
One Case:
a. Facts and circumstances: Consideration of Workers Compensation claim filed by Roy Williamson.

Conference with legal counsel: Existing Litigation - Government Code §54956.9(d)(1)
(City Attorney Garcia)
One Case:

1. Chiakowsky, et, al. v. City of Redlands, et al., San Bernardino Superior Court, Case No. CIVSB2402748

RECONVENE CITY COUNCIL MEETING

The meeting reconvened at 6:00 P.M. The invocation was provided by Council Member Barich, and the Pledge of Allegiance to the American flag was conducted by Kimberly Elementary School students.

CLOSED SESSION REPORT

City Attorney Garcia announced that no reportable action was taken during the closed session.

PUBLIC COMMENT

Together for Redlands - Michael Paisner stated that the local group, Together for Redlands, should not be confused with a different organization called Stronger Together Now. He added that Together for Redlands has been the victim of hate speech and ongoing vilification. He urged the Council to condemn acts of hatred.

Unsafe Cyclists - Bruce Laycook described witnessing cyclists who are engaging in highly unsafe activities while riding in the streets, scaring drivers, weaving in and out of traffic and popping wheelies. He also said he has seen numerous cyclists riding without helmets, and he requested the Police Department investigate these matters.

Eco-Arts Proposal Community Garden - Nine people, including Brian Ball, Brenda Spoelstra, Danielle Wallis, Daniel Gohman, Young Min Kim, Abbie Bosworth, Erin Benson, Doris Dialon, Alejandro Gutierez Chavez of the Arts Council of San Bernardino highlighted a proposed project to create and establish an eco-arts community garden/home at Sylvan Park. The intent is to utilize the historic structure near the Skate Park and develop a vibrant space where people could enjoy the arts, culture, music, and a community garden. Grant money has already been secured, and they pushed for the Council to consider their plan.

Gender Identity - Gregory Brittain stated he believes there are two genders and only two genders. He thought there was an assault on truth and that young people were confused by the dialogue regarding gender identity.

Appreciation of Diversity - Jennifer, via zoom, thanked Council Member Davis for advocating for all people within the community.

CONSENT CALENDAR

Minutes

On motion of Council Member Paul Barich, seconded by Council Member Eddie Tejeda, the City Council unanimously approved, by roll call vote, the regular meeting minutes of May 6, 2025.

**Vote:** 5 - 0 Passed

League of California Community Services Policy Report

On motion of Council Member Paul Barich, seconded by Council Member Eddie Tejeda, the City Council unanimously approved, by roll call vote, to receive and file the conference report by Mayor Saucedo for the League of California Community Services Policy Committee meeting held on March 28, 2025.

**Vote:** 5 - 0 Passed

Software Integration Agreement

On motion of Council Member Paul Barich, seconded by Council Member Eddie Tejeda, the City Council unanimously approved, by roll call vote, the Sole Source Agreement with NewEdge Services, LLC for Software Integration between Cityworks Server and Tyler Munis ERP and other professional services for a total contract not to exceed $59,300, with the option to extend the agreement for future related services.

**Vote:** 5 - 0 Passed

Sales, Use & Transactions Tax Audit Services Agreement

On motion of Council Member Paul Barich, seconded by Council Member Eddie Tejeda, the City Council unanimously approved, by roll call vote, the Professional Services Agreement for Sales, Use and Transactions Tax Audit and Consulting Services with Hinderliter De Llamas & Associates for a period of three (3) years with two (2) one-year Extended Term options in a total amount not-to-exceed $113,300.

**Vote:** 5 - 0 Passed

Emergency Medical Services Field Internship Agreement

On motion of Council Member Paul Barich, seconded by Council Member Eddie Tejeda, the City Council unanimously approved, by roll call vote, the Emergency Medical Services Field Internship Agreement between the City of Redlands and the San Bernardino Community College District (Crafton Hills College), designating the Redlands Fire Department as a Paramedic Clinical Field Internship Training Site for a five-year period, from July 1, 2025, through June 30, 2030.

**Vote:** 5 - 0 Passed

Resolution No. 8691 Staff Vacancies, Recruitment and Retention

On motion of Council Member Paul Barich, seconded by Council Member Eddie Tejeda, the City Council unanimously approved, by roll call vote, Resolution No. 8691 establishing the policy for reporting on Staff Vacancies and the City's Recruitment and Retention Efforts to comply with Government Code Section 3502.3 and Assembly Bill 2561.

**Vote:** 5 - 0 Passed

U of R Event Services Agreement for RESA

On motion of Council Member Paul Barich, seconded by Council Member Eddie Tejeda, the City Council unanimously determined, by roll call vote, that approval of the agreement is exempt from environmental review pursuant to Section 15061(b)(3) of the State's guidelines implementing the California Environmental Quality Act; and approved the Event Services Agreement with the University of Redlands to conduct the Redlands Emergency Services Academy at the University's facility.

**Vote:** 5 - 0 Passed

Intergovernmental Purchase Getac Mobile Data Computers

On motion of Council Member Paul Barich, seconded by Council Member Eddie Tejeda, the City Council unanimously approved, by roll call vote, an Intergovernmental Purchase of Getac Mobile Data Computers from Code 3 Technologies in the amount of $53,648.25.

**Vote:** 5 - 0 Passed

COMMUNICATIONS

2025 City County SBCTA Conference Report

Mayor Saucedo reported on his experiences at the 2025 City County Conference of the San Bernardino County Transit Authority (SBCTA) held May 8-9, 2025 in Lake Arrowhead. The City County Conference brings together elected officials and agency staff to discuss cooperative regional transportation planning and work towards furthering an efficient multi-modal system in the County. Sessions he attended included: Proposition 36 Implementation and Impacts; Disaster Response: Lessons Learned through Fire and Ice; and The Evolving Industrial Landscape: New Challenges and New Opportunities.

SCAQMD Proposed Amended Rules 1111 & 1121

Mayor Pro Tem Shaw explained that his request for Council to consider taking action regarding South Coast Air Quality Management District's (SCAQMD) Proposed Amended Rule 1111 (PAR 1111) and Proposed Amended Rule 1121 (PAR 1121) was introduced during the March 18, 2025 meeting and again discussed on April 1, 2025. The Council agreed to table the matter on both occasions, to allow additional time to review the revised SCAQMD proposals and to hear SCAQMD's presentation to the San Bernardino Council of Governments (SBCOG) at their April 2 meeting, related to the impacts of the PARs implementation. The

PARs seek to transition to zero-emission space and appliances, based on future effective dates when existing appliances need to be replaced.

At the April 2 SBCOG Board meeting, staff reminded the Board that at their January 8, 2025, Board meeting, they received a presentation from SCAQMD regarding PAR 1111 and 1121 and that on that same date, the Board adopted Resolution No. 25-059 opposing the PARs. Comments received from Board members at the April 2 meeting were overwhelmingly opposed to the PARs. As the SCAQMD presentation was a receive and file item, no action was taken to withdraw Resolution No. 25-59 and SBCOG's opposition to the PARs remains in place.

Furthermore, on April 2, the Redlands Chamber of Commerce's Government Review Committee meeting, the Committee voted to join the Cost of Living Council in opposition to PARs 1111 and 1121. In addition to SBCOG and the Redlands Chamber of Commerce, a number of neighboring agencies in Southern California have submitted letters of opposition to PARs 1111 and 1121, including the cities of Anaheim, Corona, Temecula, Upland, and Yorba Linda.

As public comment, Michael Paisner, Aura Vasquez, Jennifer representing the Sierra Club, Vanessa Villanueva, DeForest Barnette and Bruce Laycook supported the SCAQMD proposed rules and urged the Council to reject the letter of opposition put forward by Mayor Pro Tem Shaw. They spoke of the need for programs to reduce NOx emissions and the importance of seeking ways to transition away from fossil fuels. They suggested that by transitioning away from gas water heaters and furnaces, the rules work to save lives and eliminate "silent killers" found in homes. They pointed out that this region has the worst air pollution in the nation and to avoid serious medical outcomes, action must be taken to promote a safer and cleaner community.

Dale Broome and Gregory Brittain spoke in opposition to PARs 1111 and 1121, citing the rules placed economically harmful restrictions on homeowners and businesses, imposed compliance standards for NOx emissions that are technologically and economically unfeasible for natural gas appliance manufacturers to meet, and posed significant infrastructural challenges to an already overburdened electrical power grid. They questioned who would be funding the rebates and thought it ultimately would be the taxpayers.

Council Member Davis thanked everyone who spoke. She thought that voting against the SCAQMD programs would be in opposition to the City's Climate Action Plan, and she would not be voting to support the letter in opposition to PARs 1111 and 1121. Council Members raised concerns related to the overall costs of the program and the viability of relying on one energy source.

On motion of Mayor Pro Tempore Marc Shaw, seconded by Council Member Paul Barich, the City Council authorized, by roll call vote, the Mayor to sign a letter to SCAQMD on behalf of the City Council in opposition to Proposed Amended Rule 1111 and Proposed Amended Rule 1121.

**Vote:** 4 - 1 Passed

NAY: Council Member Denise Davis

PUBLIC HEARINGS

Resolution No. 8683 Traffic Survey Report & Ordinance No. 2982 Prima Facie Speed Limits

Mayor Saucedo declared the meeting open as a public hearing and called on Municipal Utilities and Engineering Director Harris to provide details of Resolution No. 8683 adopting the 2024 Engineering & Traffic Survey report and Ordinance No. 2982 amending Chapter 10.24 of the Redlands Municipal Code confirming prima facie speed limits for specified city streets.

On December 6, 2022, the City Council adopted Ordinance No. 2946, which amended RMC Chapter 10.24.030 to update speed limits throughout the City. At that time, the Council directed staff to re-evaluate speed limits following the full implementation of Assembly Bill 43 (AB 43), which grants cities greater flexibility in setting speed limits to improve roadway safety, particularly in areas with high pedestrian activity or with a history of reported traffic accidents. Prior to AB 43, speed limits were strictly determined by the 85th percentile speed. The 2024 Engineering and Traffic Survey (2024 E&TS) incorporates AB 43 provisions to ensure that appropriate speed limits are established for specific roadway conditions and safety priorities while remaining compliant with State law.

The findings of the speed surveys conducted across various street segments, were presented to the Traffic and Parking Commission (TPC) on January 23, 2025. Open house events were hosted on February 8 and February 13, 2025, to solicit public feedback on the 2024 E&TS. The TPC conducted a final review of the study on March 27, 2025, and voted 4:1 to recommend City Council approval of the 2024 E&TS. The 2024 E&TS report provides a comprehensive analysis of speed limits throughout the City and recommends speed limit reductions on fifty-five roadway segments in accordance with applicable State laws.

Council Member Tejeda was pleased with the recommended speed limit reductions on so many roads that were scattered throughout every district in the City. Council Member Barich asked whether the speed limits could be reduced by another 5 mph. Director Harris and City Manager Duggan explained that the City must remain in compliance with the law. Deviating too far below the 85th percentile could artificially create speed traps.

As public comment, Kevin Morningstar said he had thoroughly reviewed the 2025 E&TS report but expressed concerns about some of the report's conclusions. There was a lack of correlation between accident data and posted speed limits, possibly indicating that accidents were not speed-induced, but instead driver-related. He requested the Council send the matter back to the TPC for further review. Michael Paisner warned that establishing different speed limits on certain sections along one road could cause driver confusion and create a potential speed trap. Bruce Laycook suggested the Council focus on changing driver behavior and their speeding habits. Changing posted speed limits will not necessarily change driving behavior on its own, and he recommended educating the public and issuing warning tickets as a more effective way to change behavior. With no further comments, Mayor Saucedo closed the public hearing. Council Members offered their perspectives and held a brief discussion about delaying the vote, but ultimately, they agreed to support the proposed resolution and ordinance.

On motion of Council Member Paul Barich, seconded by Council Member Eddie Tejeda, the City Council unanimously determined, by roll call vote, that the approval of Resolution No. 8683, and introduction of Ordinance No. 2982 are exempt from environmental review pursuant to Sections 15061(b)(3) of the California Environmental Quality Act; approved Resolution No. 8683 adopting the 2024 Engineering & Traffic Survey report and rescinding Resolution No. 8348; and introduced Ordinance No. 2982, amending Chapter 10.24 of the Redlands Municipal Code confirming prima facie speed limits for specified city streets.

**Vote:** 5 - 0 Passed

NEW BUSINESS

Traffic Signal Systems Maintenance Agreement Amended

Facilities and Community Services Director Crocker explained the need for the First Amendment to the Non-Professional Services Agreement with Yunex LLC, for Traffic Signal Systems Maintenance, to increase the Contractor's scope of services and compensation for additional services in the amount of $340,000. With the introduction of new technology and the development of the Redlands Passenger Rail Project (RPRP), maintenance has become more specialized and complex, requiring specialized services to establish and maintain.

On motion of Council Member Paul Barich, seconded by Council Member Eddie Tejeda, the City Council unanimously approved, by roll call vote, the First Amendment to the Non-Professional Services Agreement with Yunex LLC, for Traffic Signal Systems Maintenance, to increase the Contractor's scope of services and compensation for additional services in the amount of $340,000.

**Vote:** 5 - 0 Passed

Recycled Water Supply Agreement with SCE

Staff requested this item be pulled from the agenda, and it will be presented to the City Council at a future meeting.

FY 25/26 MUED Annual Purchase Orders

Municipal Utilities and Engineering Director Harris reviewed the FY 25/26 MUED Annual Purchase Orders for a total amount not-to-exceed $4,852,000. MUED operates and maintains critical water and wastewater utility infrastructure and facilities throughout the City's service area. The vendors will provide miscellaneous repair and maintenance supplies, chemical and laboratory products, specialized departmental materials, and on-call maintenance and contractual services on an as-needed basis.

On motion of Council Member Eddie Tejeda, seconded by Mayor Mario Saucedo, the City Council unanimously determined, by roll call vote, that approval of the FY 25/26 MUED Annual Purchase Orders is exempt from environmental review pursuant to Section 15301 of the State's Guidelines implementing the California Environmental Quality Act; and approved the FY 25/26 MUED Annual Purchase Orders for an amount not-to-exceed $4,852,000.

**Vote:** 5 - 0 Passed

Water Meter Replacement Project Agreement Amendment

Municipal Utilities and Engineering Director Harris introduced the First Amendment to the Non-Professional Services Agreement with Ferguson Enterprises, LLC for the Water Meter Replacement Project to increase the total compensation amount by 2.5% to $6,915,828.08. The Project is ninety-five percent complete and staff is able to read water meters remotely as soon as they are installed. Throughout this final Project phase, several bid item quantity discrepancies were discovered. The original bid schedule underestimated the actual number of water meter vault lids, 3/4", 1", and 2" water meters and registers to be replaced within water meter reading routes 22 and 23. A First Amendment is necessary to adjust the Agreement total compensation to reconcile actual Project costs before the Project is completed. The Amendment revises the total compensation to $6,915,828.08, an increase of $168,570.12 (2.5 %) to the original Agreement's total compensation.

On motion of Mayor Pro Tempore Marc Shaw, seconded by Council Member Paul Barich, the City Council unanimously determined, by roll call vote, that approval of the First Amendment to the Non-Professional Services Agreement with Ferguson Enterprises, LLC is exempt from environmental review pursuant to Section 15061(b)(3) of the State's guidelines implementing the California Environmental Quality Act; and approved the First Amendment to the Non-Professional Services Agreement with Ferguson Enterprises, LLC for the Water Meter Replacement Project to increase the total compensation amount by 2.5% to $6,915,828.08.

**Vote:** 5 - 0 Passed

COUNCIL MEMBER ANNOUNCEMENTS AND ACTIVITIES

Mayor Saucedo attended a Town Hall meeting hosted by Congressman Pete Aguilar, the Public Market grand opening, enjoyed reading to young children at Mountain Grove Plaza, the Boards and Badges event at the skatepark, Taco Bell's grand re-opening, participated in the Blessing Center's Hike for Hope, and he and City Manager Duggan met with Assemblymember Robert Garcia.

Mayor Pro Tem Shaw enjoyed the Library Days event and invited everyone to come downtown on Sunday, May 25 for the annual Redlands Firefighters Car Show.

Council Member Barich enjoyed the Library Days event and attended the Library Board meeting, adding that the Museum of Redlands is moving closer to being completed.

Council Member Tejeda participated in a neighborhood meeting to discuss residents' concerns about new development along Stuart Street downtown, and he attended the local Teamster meeting.

Council Member Davis enjoyed the Library Days event, the Boards and Badges event at the skatepark, and the Blue Zone program kickoff in Riverside. She reminded everyone that the Blue Zone program in Redlands had been extended, and she encouraged the community to participate in a healthy walk on Saturday mornings at Brookside Park.

ADJOURNMENT

Mayor Saucedo adjourned the City Council meeting at 7:51 P.M. in memory of Dan McHugh, who passed away last week. Dan retired in 2022, after serving 28 years as the City Attorney and the principal legal advisor to the City Council, City Manager and all operations. He was appointed in 1994 and worked alongside eighteen separate city councils. He witnessed the tremendous change in the city over nearly three decades and was intricately involved in the most important developments within the community. He held a tremendous amount of institutional knowledge, and it is hard to overstate his role in the City. He will be remembered as a highly intelligent man, with a dry wit and an incredible work ethic, and he will be greatly missed. The next regular meeting of the City of Redlands City Council will be held on June 3, 2025.

REDLANDS FINANCING AUTHORITY

Chairperson Saucedo called the meeting to order and offered anyone present the opportunity to address the Board on any subject not already on the agenda, within the jurisdiction of the Redlands Financing Authority.

PUBLIC COMMENT

None forthcoming

Minutes

On motion of Board Member Barich, seconded by Board Member Davis, the minutes of the regular meeting of January 21, 2025 were unanimously approved, by roll call vote.

**Vote**: 5 - 0 Passed

ADJOURNMENT

There being no further business, the Redlands Financing Authority adjourned at 7:52 P.M. The next regular meeting of the Agency will be held on September 16, 2025.